Illinois Tollway Standard Drawing Revisions

Section B	Drainage Structures, Curbs & Gutter	
	Standard	**Modification Summary** **Effective: 03-01-2020**
	B3	**Type G-2/G-3 Gutter Transition at Traffic Barrier Terminal, Type T6**
	Sheet 1	Revised Gutter G-3 Transition length, tapers and sections due to changes to the TBT Type T6 terminal.
	Sheet 2	Revised Gutter G-2 Transition length, tapers and sections due to changes to the TBT Type T6 terminal.
	Sheet 3	Revised Gutter G-3 Transition length, tapers and sections due to changes to the TBT Type T6 terminal.
	Sheet 4	Revised Gutter G-3 Transition length, tapers and sections due to changes to the TBT Type T6 terminal.
	Sheet 5	Revised Gutter G-2 Transition length, tapers and sections due to changes to the TBT Type T6 terminal.
	Sheet 6	Revised Gutter G-3 Transition length, tapers and sections due to changes to the TBT Type T6 terminal.
	B7	**Catch Basin, Type B**
	Sheet 1	Revised callouts on the Typical Reinforcement Around Storm Sewer Pipe detail.
	B8	**Catch Basins Type G and Type G-3 Modified, Frames and Grates**
	Sheet 1	Revised callouts on the Typical Reinforcement Around Storm Sewer Pipe detail.
	Sheet 1	Revised Bar h1(E) detail.
	Sheet 1	Added Catch Basin, Type G-3, Modified with Type 20A Frame and Grate detail.
	Sheet 1	Added #8 h2(E) bars to the reinforced concrete lids.
	Sheet 2	Revised callouts on the Typical Reinforcement Around Storm Sewer Pipe detail.
	Sheet 2	Revised #6 Bar h1(E) detail.
	Sheet 2	Added #8 h2(E) bars to the reinforced concrete lids.
	Sheet 3	Revised callouts on the Typical Reinforcement Around Storm Sewer Pipe detail.
	Sheet 3	Revised #6 Bar h1(E) detail.
	Sheet 3	Added #8 h2(E) bars to the reinforced concrete lids.
	B10	**Sloped Headwalls Type III Details**
	Sheet 1	Revised Note 8 to say "compressive strength in accordance with the standard specifications".
	Sheet 1	Added Note 12 stating that rebar reinforcement may be used as an option to welded wire reinforcement.
	Sheet 2	Revised Note 7 to say "compressive strength in accordance with the standard specifications".
	Sheet 2	Added Note 11 stating that welded wire reinforcement may be used as an option to rebar reinforcement.
	Sheet 2	Added callout in Section A-A indicating station, offset, and invert elevation location.
	B24	**Pipe Underdrains**
	Sheet 1	Added composite pavement as an option for pavement type.

New Sheet Retired Standard

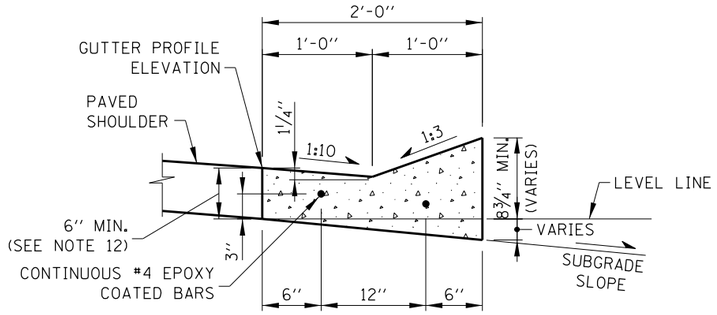

GUTTER, TYPE G-2

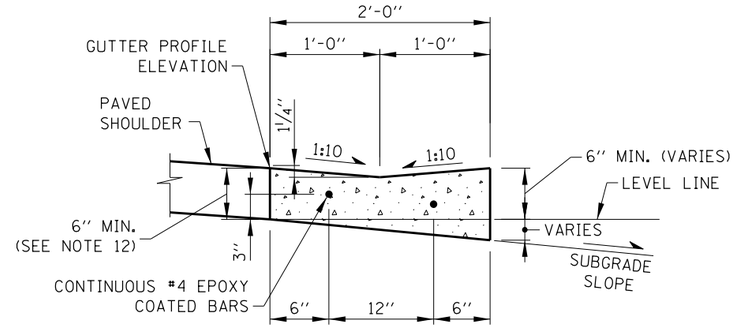

GUTTER, TYPE G-2, MODIFIED

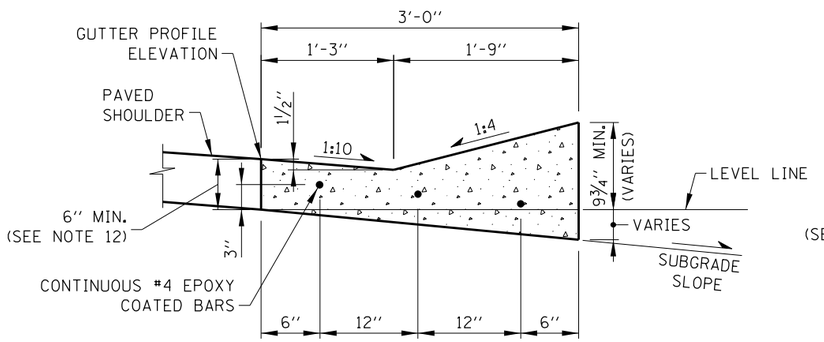

GUTTER, TYPE G-3

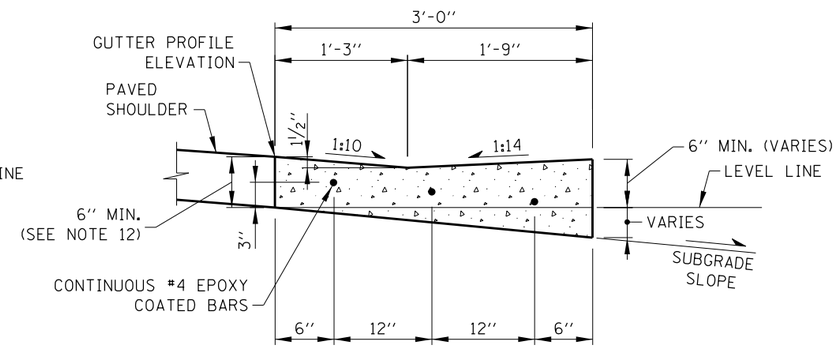

GUTTER, TYPE G-3, MODIFIED

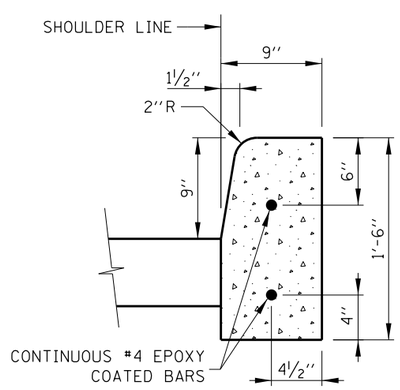

ADJACENT TO FLEXIBLE PAVEMENT

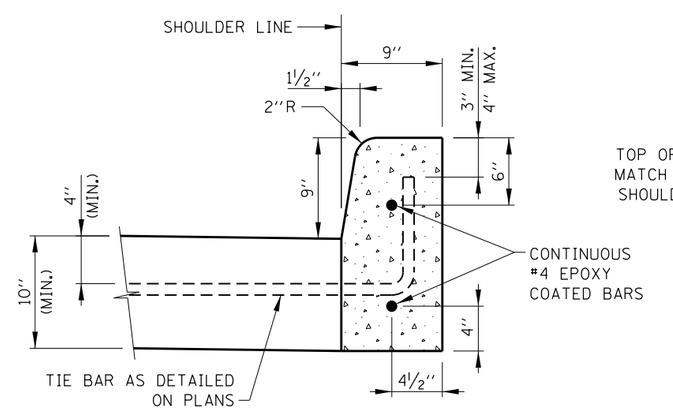

ADJACENT TO PCC PAVEMENT

CONCRETE CURB, TYPE C

(RAMP TOLL PLAZAS ONLY)

NOTES:

1. FOR CONCRETE CURB, TYPE C TRANSITIONS, THE LEADING ENDS OF CURB IN THE DIRECTION OF TRAFFIC SHALL BEGIN FLUSH WITH ADJACENT PAVEMENT OR SHOULDER SURFACE AND TRANSITION TO FULL HEIGHT AT THE RATE OF ONE INCH VERTICAL TO ONE FOOT HORIZONTAL.

2.

GUTTER TRANSITION DETAILS	STANDARD DRAWING
TRAFFIC BARRIER TERMINAL TYPE T1 (SPECIAL)	B-28
TRAFFIC BARRIER TERMINAL TYPE T1-A (SPECIAL)	B-29
TRAFFIC BARRIER TERMINAL TYPE T10	B-2
TRAFFIC BARRIER TERMINAL TYPE T6	B-3

3. ALL SLOPES ARE EXPRESSED AS UNITS OF VERTICAL DISPLACEMENT TO UNITS OF HORIZONTAL DISPLACEMENT (V:H).
4. REINFORCEMENT STEEL SHALL BE ACCURATELY PLACED AND FIRMLY HELD IN THE POSITION SPECIFIED USING EPOXY COATED STEEL CHAIRS. CHAIR SPACING SHALL NOT EXCEED 4'-0".
5. GUTTER REINFORCEMENT SHALL BE PLACED 3" ABOVE BOTTOM OF GUTTER FOLLOWING THE SUBGRADE SLOPE.
6. OTHER GUTTER AND CURB TRANSITION DETAILS WILL BE SHOWN ON THE PLANS.
7. CONTINUOUS #4 BARS SHALL BE LAPPED A MINIMUM OF 1'-1".
8. FOR CONCRETE GUTTER OVERLAYS, CRACK CONTROL JOINTS SHALL BE PLACED AT LOCATIONS OF UNDERLYING JOINTS AND WORKING CRACKS.
9. GUTTER CRACK CONTROL JOINTS TO ALIGN IN PROLONGATION WITH PCC SHOULDER JOINTS WHERE EXISTING. CRACK CONTROL JOINTS SHALL BE SEALED FULL DEPTH AND WIDTH IN ACCORDANCE WITH THE STANDARD SPECIFICATIONS.
10. EXPANSION JOINTS SHALL BE CONSTRUCTED IN GUTTER AT MAXIMUM JOINT SPACING OF 60'-0", SEE EXPANSION JOINT DETAIL ON SHEET 2 OF THIS STANDARD.
11. GUTTER REMOVAL TO BE PAID AS GUTTER REMOVAL (SPECIAL).
12. GUTTER DEPTH SHALL MATCH PAVED SHOULDER DEPTH.

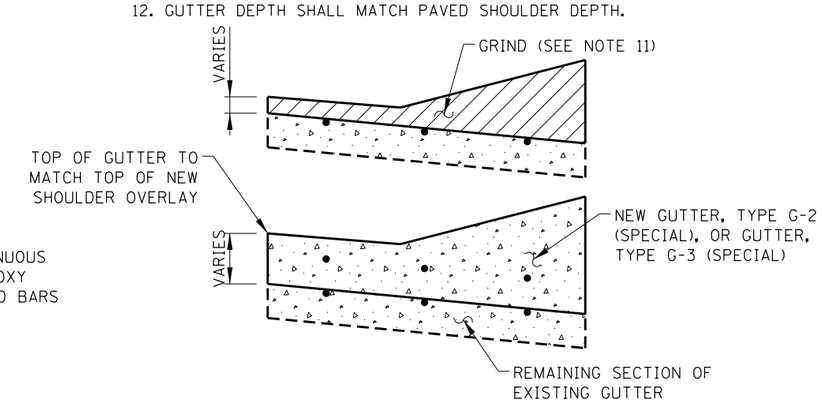

CONCRETE GUTTER OVERLAY

SHEET 1 OF 2

DATE	REVISIONS
3-11-2015	REVISED DETAIL DESCRIPTIONS
3-31-2016	REVISED NOTE
3-01-2018	REVISED NOTE
3-01-2019	NOTED GUTTER DEPTH SHALL MATCH PAVED SHOULDER DEPTH

Illinois Tollway

GUTTER AND CURB DETAILS

STANDARD B1-09

Paul Kovacs
APPROVED CHIEF ENGINEERING OFFICER
DATE 2-7-2012

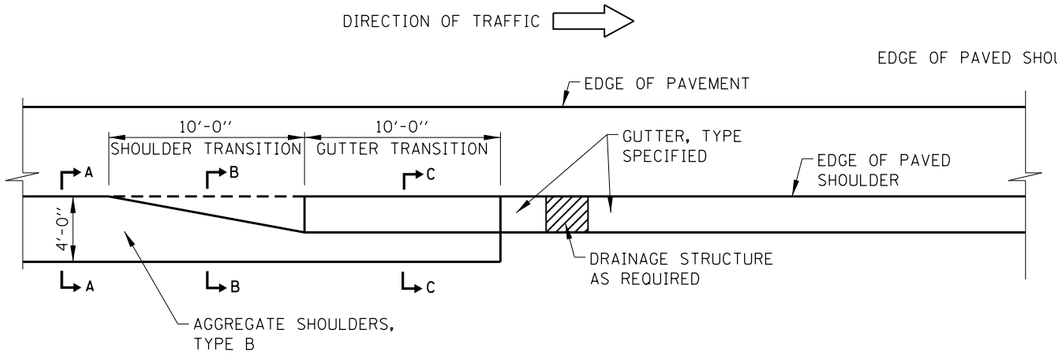

GUTTER TRANSITION TERMINATION

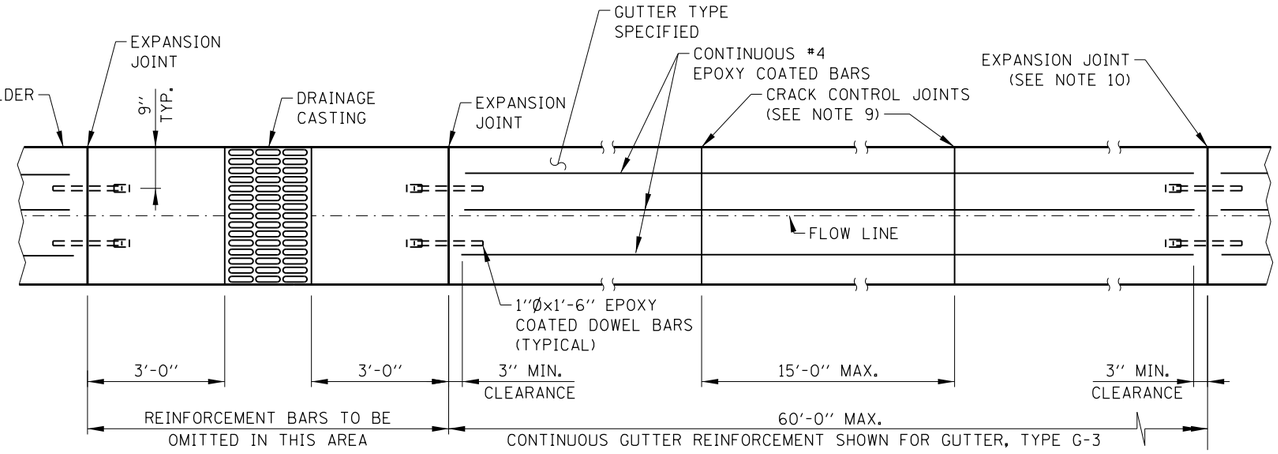

GUTTER PLAN

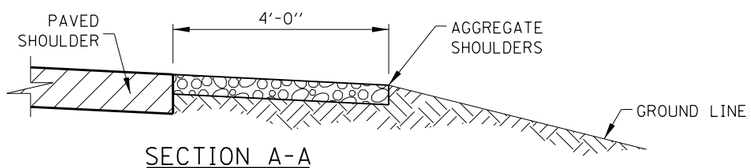

SECTION A-A

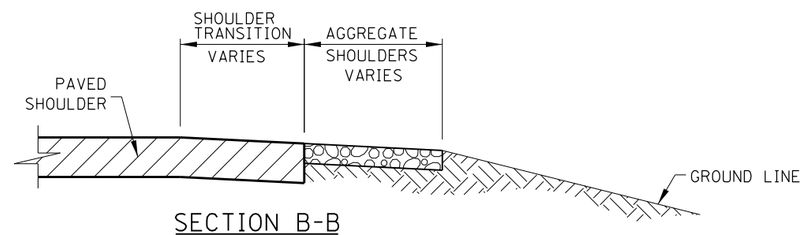

SECTION B-B
ASPHALT SHOULDER TRANSITION

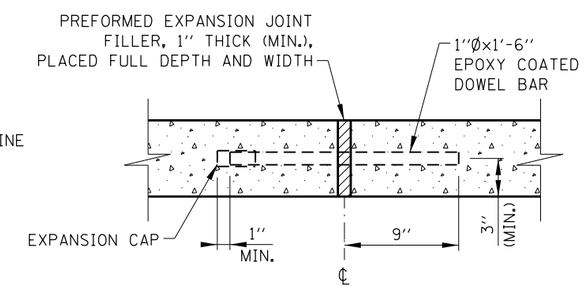

EXPANSION JOINT

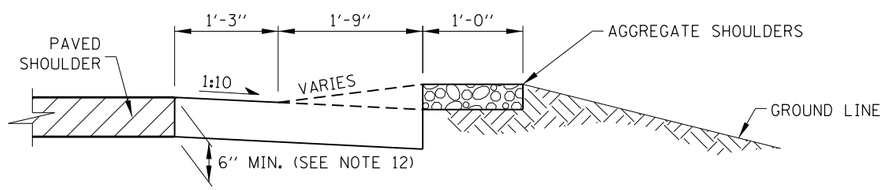

GUTTER, TYPE G-3 TRANSITION

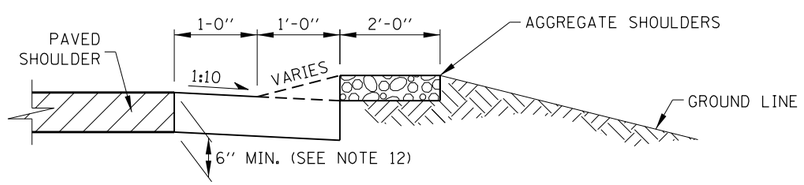

GUTTER, TYPE G-2 TRANSITION

SECTION C-C

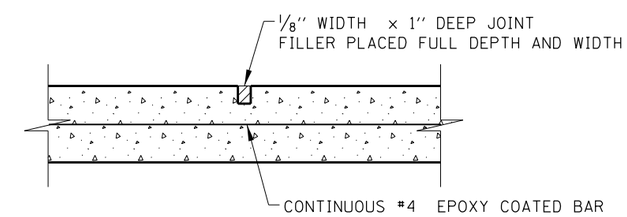

CRACK CONTROL JOINT

EXPANSION-CRACK CONTROL JOINTS
GUTTER, TYPE SPECIFIED

NOTE:
SEE SHEET 1 OF THIS SERIES FOR NOTES.

Illinois Tollway

GUTTER AND CURB DETAILS

STANDARD B1-09

APPROVED Paul Kovacs
CHIEF ENGINEERING OFFICER
DATE 2-7-2012

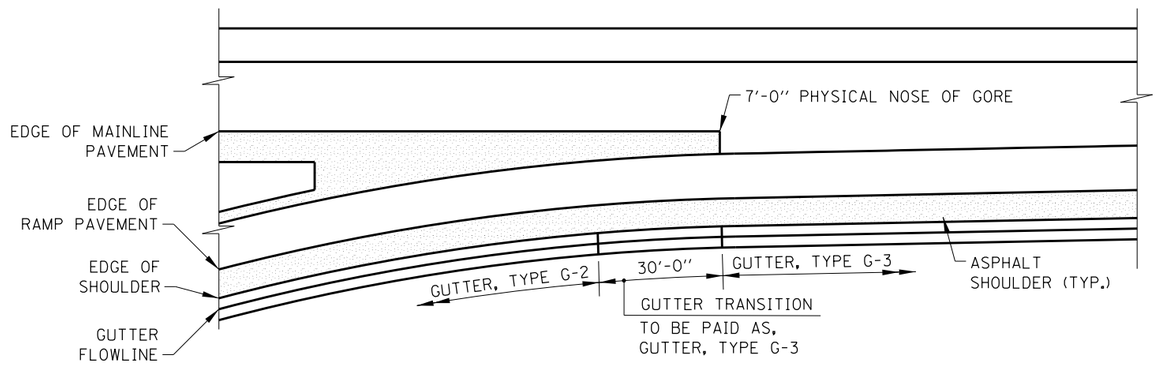

GUTTER TRANSITION AT ENTRANCE RAMP TERMINALS

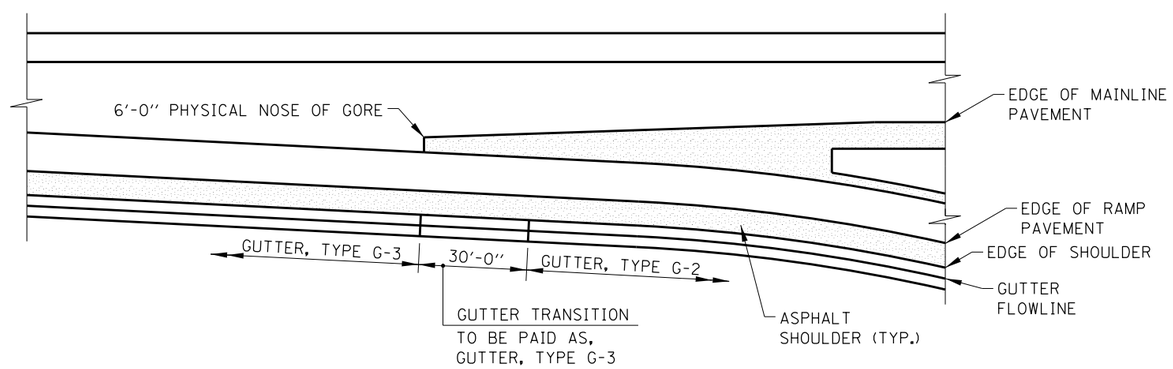

GUTTER TRANSITION AT EXIT RAMP TERMINALS

GUTTER TRANSITION NOTES:

1. PROVIDE 1" EXPANSION JOINT WITH PREFORMED JOINT FILLER BETWEEN TRANSITION SECTION AND WINGWALL, BARRIER, OR PARAPET.
2. SEE STANDARD B3 FOR GUTTER TRANSITIONS AT BRIDGE APPROACH.
3. ALL SLOPES ARE EXPRESSED AS UNITS OF VERTICAL DISPLACEMENT TO UNITS OF HORIZONTAL DISPLACEMENT (V:H).
4. REINFORCEMENT BARS SHALL BE ACCURATELY PLACED AND FIRMLY HELD AT THE POSITION USING EPOXY COATED CHAIRS. CHAIR SPACING SHALL NOT EXCEED 4'-0".
5. GUTTER REINFORCEMENT BARS SHALL BE PLACED 3" ABOVE BOTTOM OF GUTTER FOLLOWING SUBGRADE SLOPE.
6. CONTINUOUS #4 BARS SHALL BE LAPPED A MINIMUM OF 1'-1".
7. GUTTER DEPTH SHALL MATCH PAVED SHOULDER DEPTH.

SHEET 1 OF 2

DATE	REVISIONS
3-01-2010	RELOCATED GUTTER TRANSITION DETAIL TO STANDARD B28. REVISED NOTES REVISED TYPE G-3, G-2 GUTTER AT BRIDGE APPROACH.
2-07-2012	REVISED NOTES.
3-11-2015	REVISED DETAIL DESCRIPTIONS AND NOTES.
3-31-2016	REVISED G-2 GUTTER SHAPE
3-01-2018	REVISED NOTE
3-01-2019	NOTED GUTTER DEPTH SHALL MATCH PAVED SHOULDER DEPTH

Illinois Tollway

TYPE G-2 AND G-3 GUTTER TRANSITIONS

STANDARD B2-08

Paul Kovacs
APPROVED CHIEF ENGINEERING OFFICER
DATE 2-7-2012

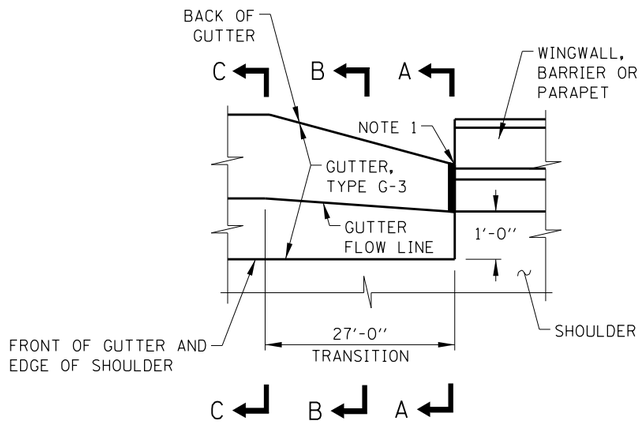

PLAN

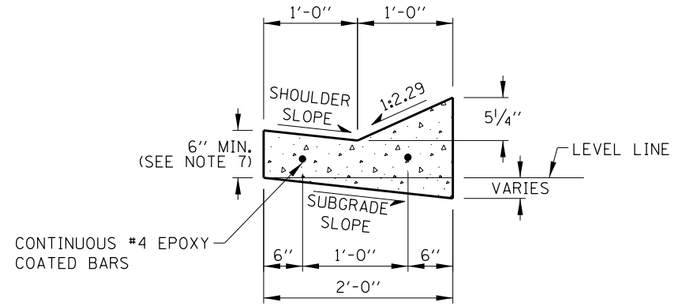

SECTION A-A

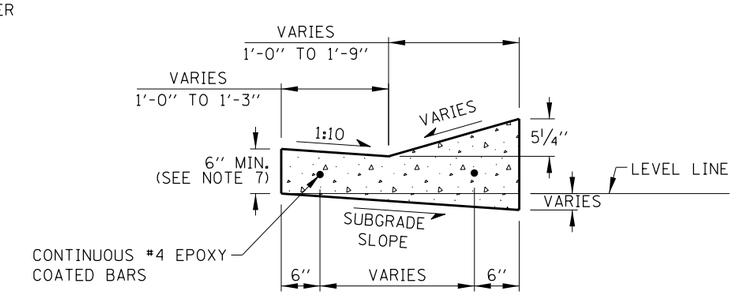

SECTION B-B

GUTTER, TYPE G-3 TRANSITION AT BRIDGE DEPARTURE

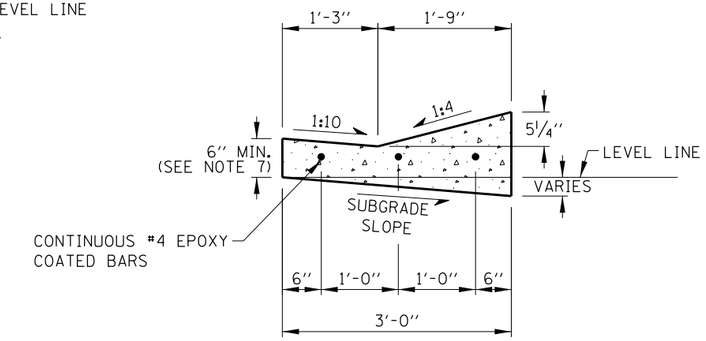

SECTION C-C
GUTTER, TYPE G-3

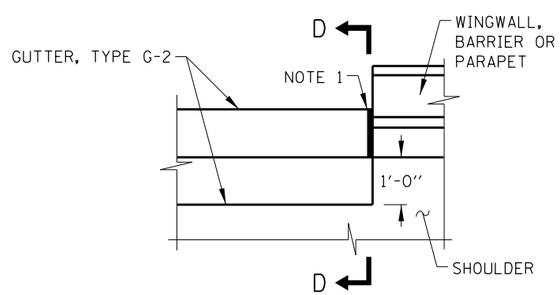

PLAN

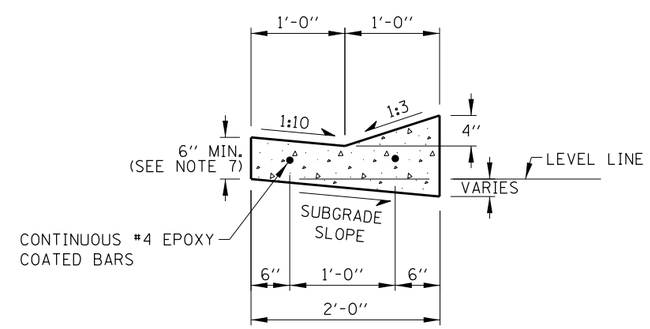

SECTION D-D
GUTTER, TYPE G-2

GUTTER, TYPE G-2 AT BRIDGE DEPARTURE

NOTE:
SEE SHEET 1 OF THIS SERIES FOR NOTES.

Paul Kovacs
APPROVED ..... CHIEF ENGINEERING OFFICER
DATE 2-7-2012

Illinois Tollway

TYPE G-2 AND G-3
GUTTER TRANSITIONS

STANDARD B2-08

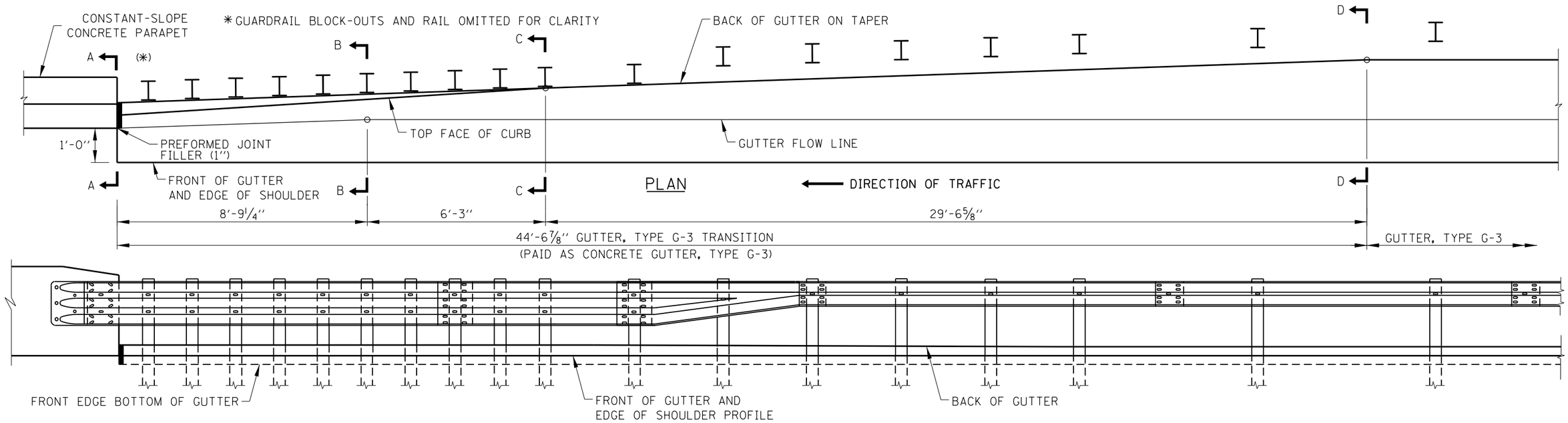

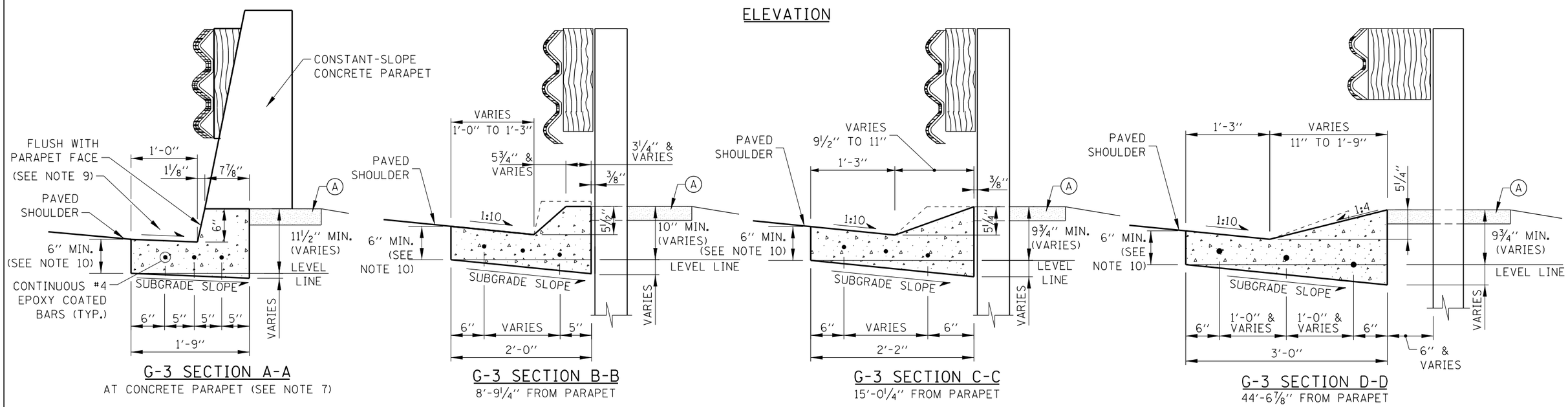

GUTTER, TYPE G-3 TRANSITION AT TRAFFIC BARRIER TERMINAL, TYPE T6 TO CONSTANT-SLOPE CONCRETE PARAPET

GUTTER TRANSITION NOTES:

1. SLOPE TO MATCH ADJACENT SHOULDER SLOPE.
2. PROVIDE 1" EXPANSION JOINT WITH PREFORMED JOINT FILLER BETWEEN TRANSITION SECTION AND WINGWALL OR BARRIER WALL.
3. INSTALLATION ON CURVED WINGWALLS SIMILAR.
4. FOR DETAILS OF TRAFFIC BARRIER TERMINAL, TYPE T6, SEE ILLINOIS TOLLWAY STANDARD C9.
5. GUTTER TRANSITIONS SHALL BE CONSTRUCTED TO FIT THE STANDARD LOCATION OF THE TRAFFIC BARRIER TERMINAL, TYPE T6.
6. ALL SLOPES ARE EXPRESSED AS UNITS OF VERTICAL DISPLACEMENT TO UNITS OF HORIZONTAL DISPLACEMENT (V:H).
7. GUTTER SECTION SHOWN AT BARRIER WALL SHALL MATCH PROFILE AND VERTICAL FACE OF BARRIER. MODIFY GUTTER FACE TO MATCH OTHER BARRIER/PARAPET PROFILES.
8. CONTINUOUS #4 BARS SHALL BE LAPPED A MINIMUM OF 1'-1".
9. MATCH SHOULDER SLOPE IN FRONT OF PARAPET OR BARRIER.
10. GUTTER DEPTH SHALL MATCH PAVED SHOULDER DEPTH.

LEGEND

(A) AGGREGATE SHOULDERS SPECIAL, TYPE C

Paul Kovacs
APPROVED ..... DATE 2-7-2012
CHIEF ENGINEERING OFFICER

DATE	REVISIONS
3-11-2015	GUTTER TRANSITION FOR CONCRETE BARRIER, SINGLE-FACE.
3-31-2016	REVISED G-2 GUTTER SHAPE
3-01-2018	REVISED NOTES
3-01-2019	ADDED PG 1, 2 & 3 CONSTANT-SLOPE BARRIER & NOTE 10 (GUTTER DEPTH).
3-01-2020	REVISED GUTTER TRANSITION LENGTH AND TAPER

SHEET 1 OF 6

Illinois Tollway

TYPE G-2/G-3 GUTTER TRANSITION AT TRAFFIC BARRIER TERMINAL, TYPE T6

STANDARD B3-09

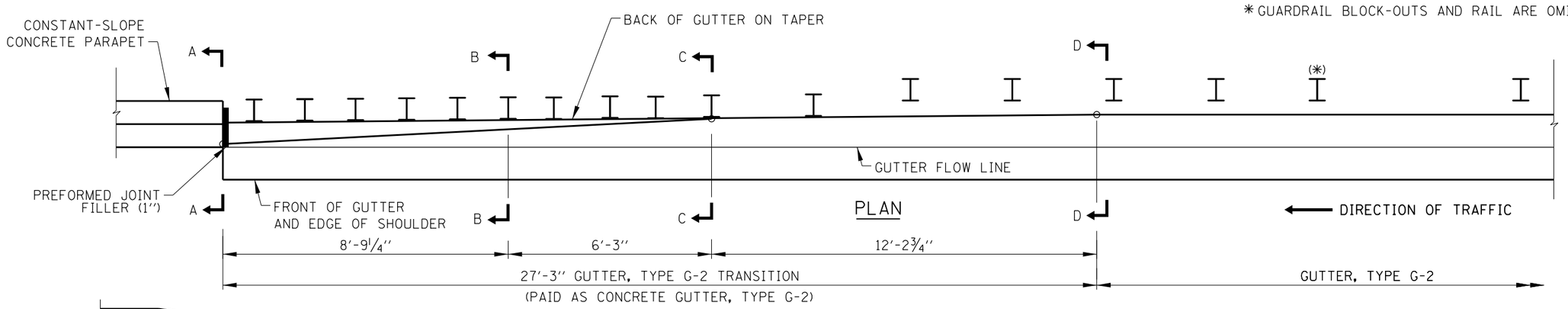

* GUARDRAIL BLOCK-OUTS AND RAIL ARE OMITTED FOR CLARITY

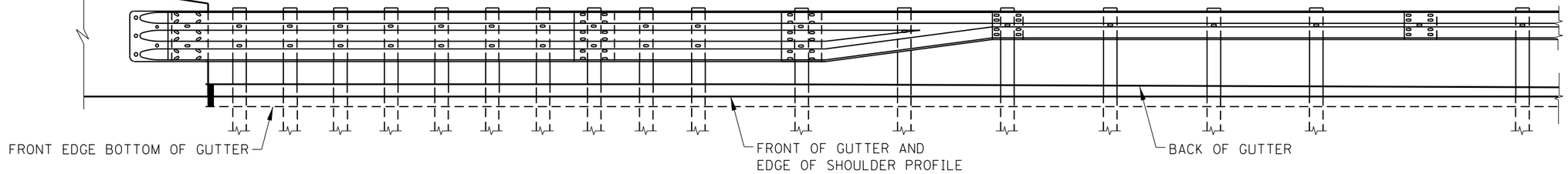

ELEVATION

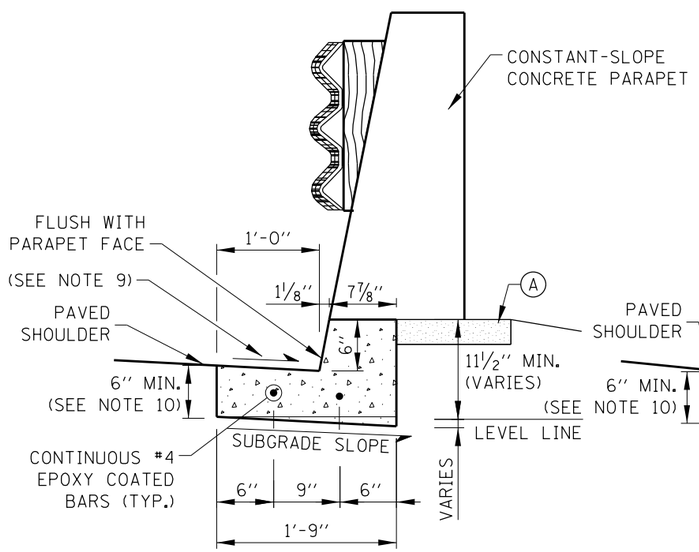

G-2 SECTION A-A
AT CONCRETE PARAPET
(SEE NOTE 8)

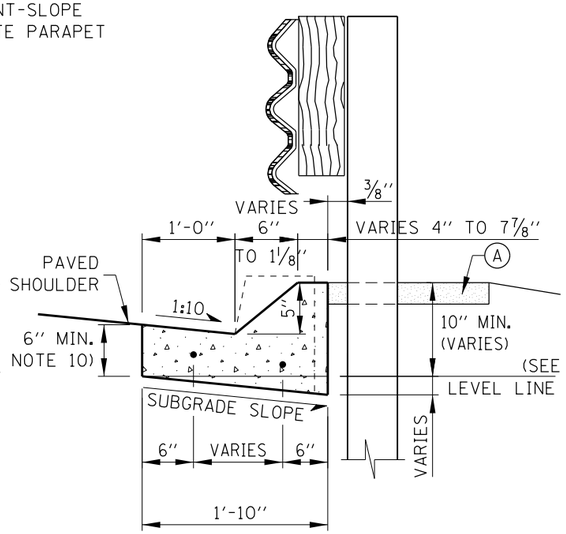

G-2 SECTION B-B
8'-9 1/4" FROM PARAPET

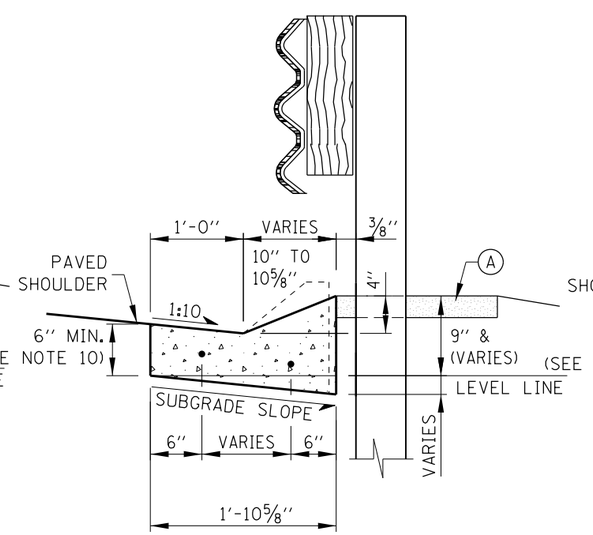

G-2 SECTION C-C
15'-0 1/4" FROM PARAPET

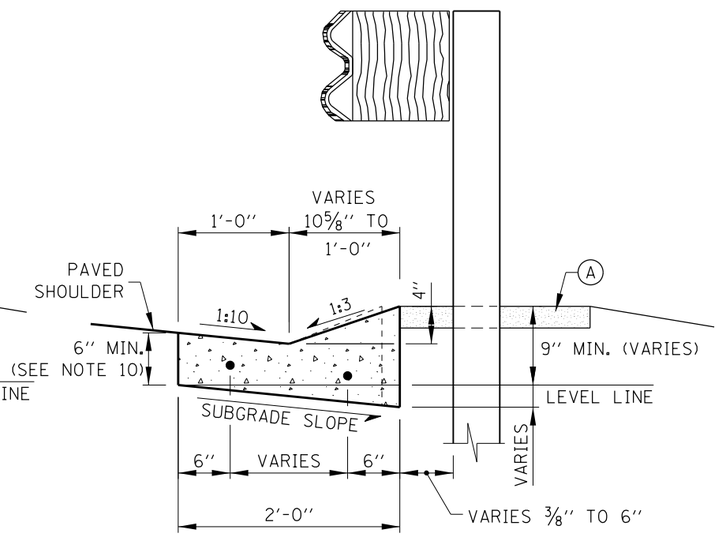

G-2 SECTION D-D
27'-3" FROM PARAPET

GUTTER, TYPE G-2 TRANSITION AT TRAFFIC BARRIER TERMINAL, TYPE T6 TO CONSTANT-SLOPE CONCRETE PARAPET

SHEET 2 OF 6

LEGEND

(A) AGGREGATE SHOULDERS SPECIAL, TYPE C

NOTE:

SEE SHEET 1 OF THIS SERIES FOR GUTTER TRANSITION NOTES.

Paul Kovacs
APPROVED ..... DATE 2-7-2012
CHIEF ENGINEERING OFFICER

Illinois Tollway

TYPE G-2/G-3 GUTTER TRANSITION AT TRAFFIC BARRIER TERMINAL, TYPE T6

STANDARD B3-09

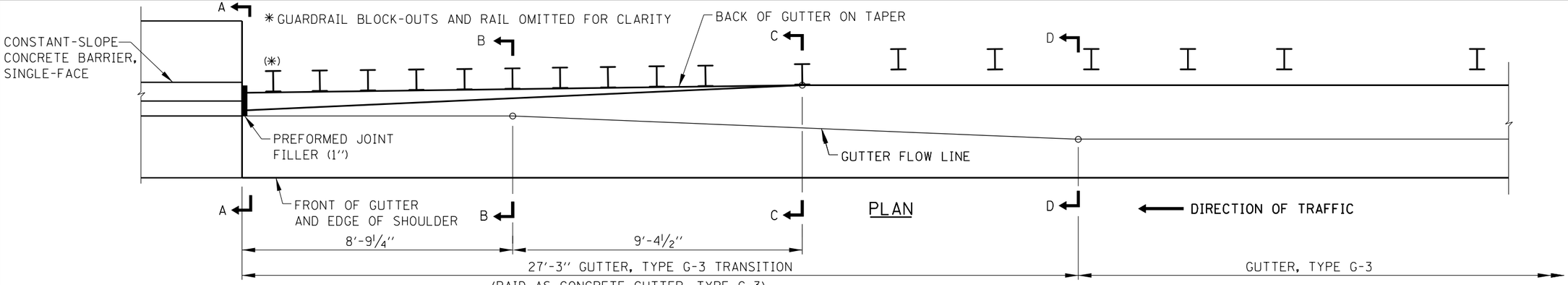

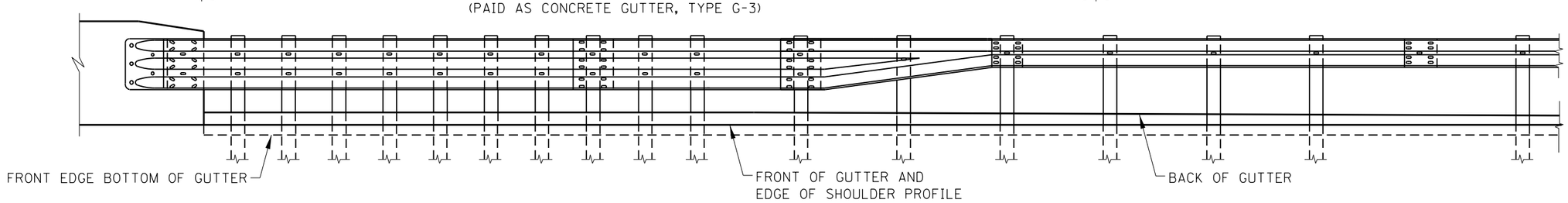

ELEVATION

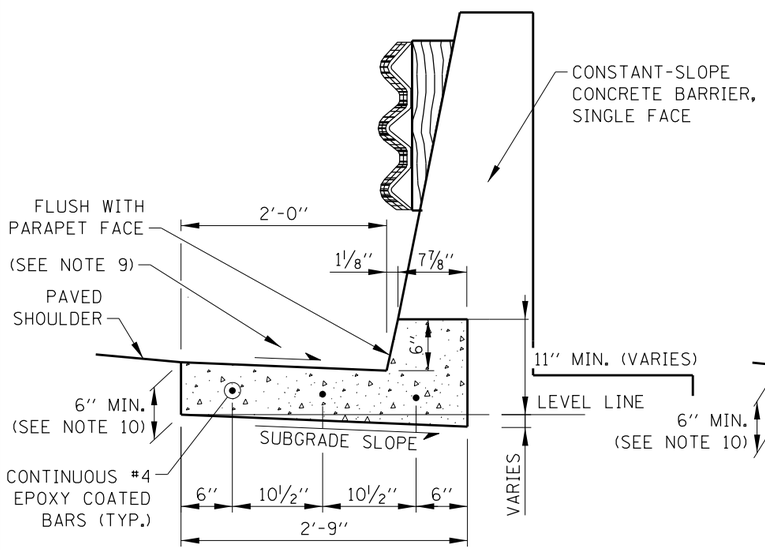

G-3 SECTION A-A

AT CONCRETE BARRIER, SINGLE-FACE (SEE NOTE 7)

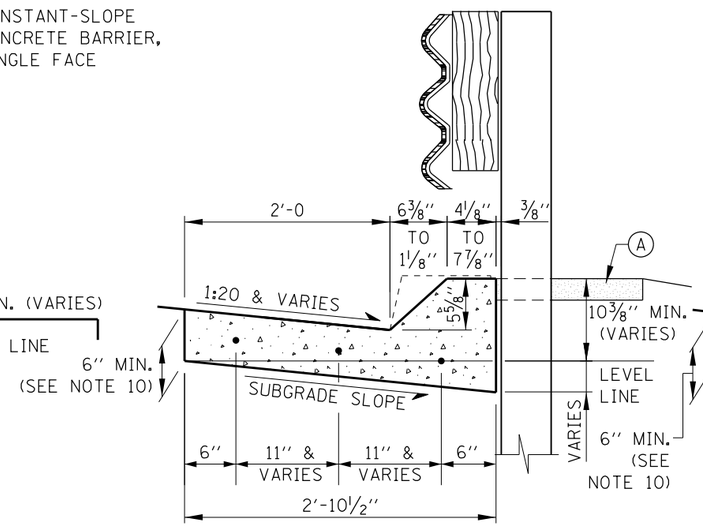

G-3 SECTION B-B

8'-9¼" FROM CONCRETE BARRIER

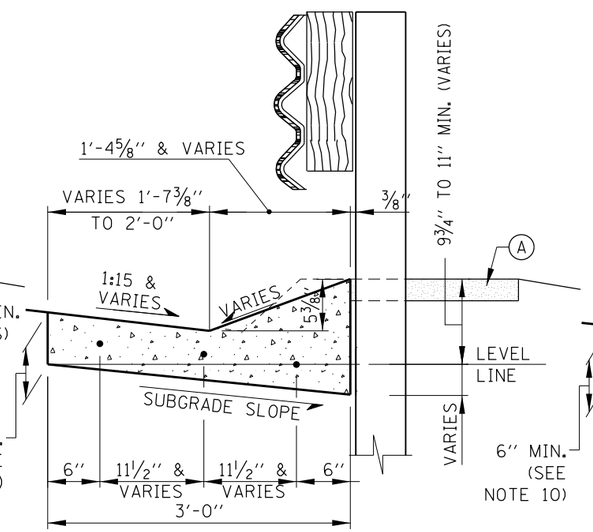

G-3 SECTION C-C

18'-1¾" FROM CONCRETE BARRIER

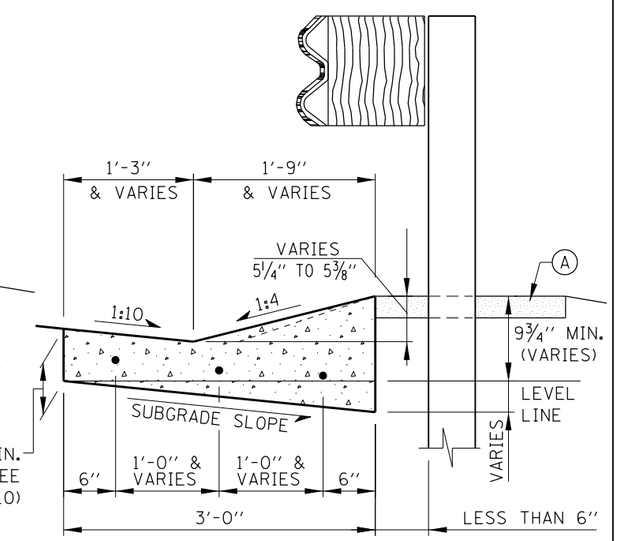

G-3 SECTION D-D

27'-3" FROM CONCRETE BARRIER

LEGEND

(A) AGGREGATE SHOULDERS SPECIAL, TYPE C

GUTTER, TYPE G-3 TRANSITION AT TRAFFIC BARRIER TERMINAL, TYPE T6, TO CONSTANT-SLOPE CONCRETE BARRIER, SINGLE FACE

NOTE:

SEE SHEET 1 OF THIS SERIES FOR GUTTER TRANSITION NOTES.

Illinois Tollway

TYPE G-2/G-3 GUTTER TRANSITION AT TRAFFIC BARRIER TERMINAL, TYPE T6

STANDARD B3-09

Paul Kovacs
APPROVED ..... DATE 2-7-2012
CHIEF ENGINEERING OFFICER

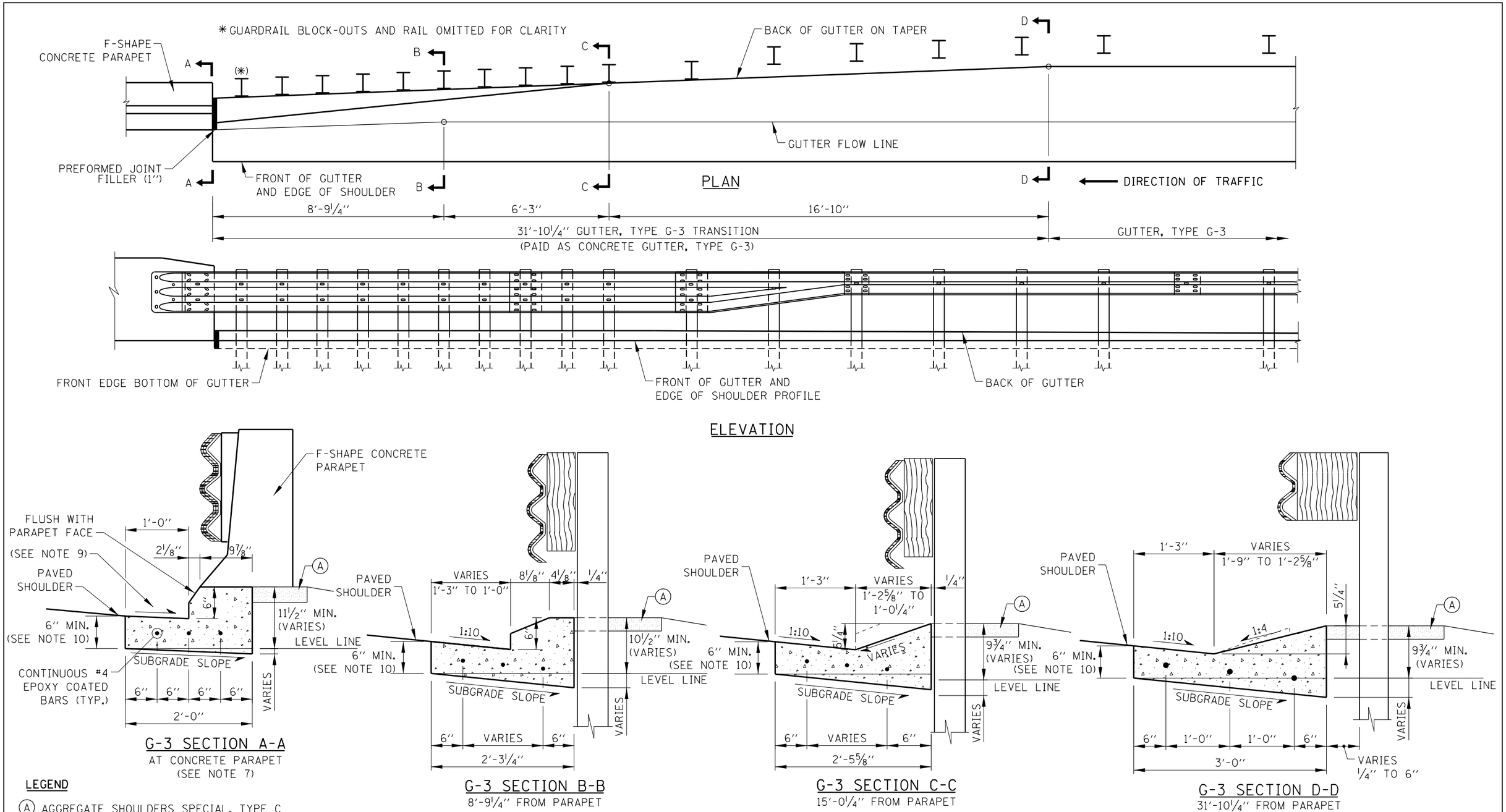

LEGEND

(A) AGGREGATE SHOULDERS SPECIAL, TYPE C

GUTTER, TYPE G-3 TRANSITION AT TRAFFIC BARRIER TERMINAL, TYPE T6 TO F-SHAPE CONCRETE PARAPET

NOTE:

SEE SHEET 1 OF THIS SERIES FOR GUTTER TRANSITION NOTES.

APPROVED Paul Kovacs CHIEF ENGINEERING OFFICER DATE 2-7-2012

Illinois Tollway

TYPE G-2/G-3 GUTTER TRANSITION AT TRAFFIC BARRIER TERMINAL, TYPE T6

STANDARD B3-09

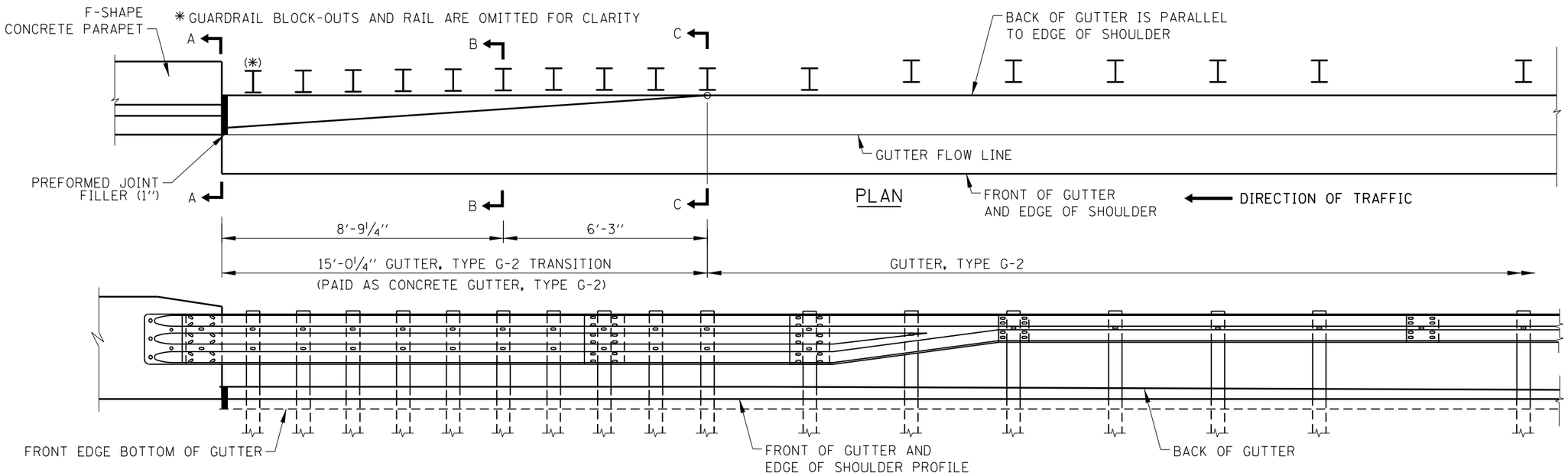

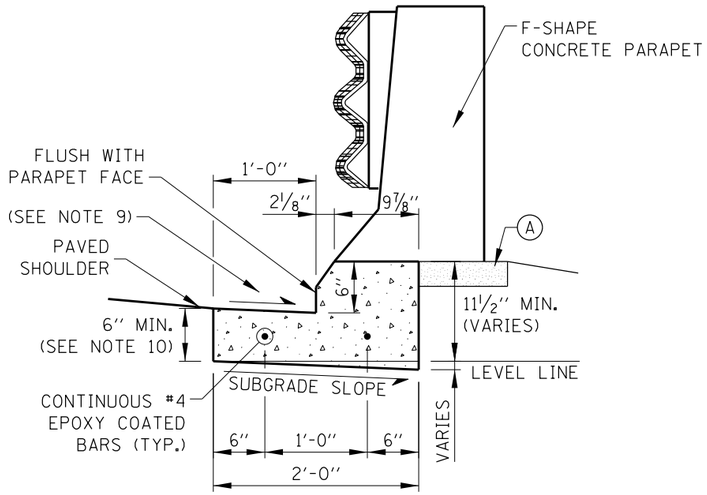

G-2 SECTION A-A
AT CONCRETE PARAPET
(SEE NOTE 7)

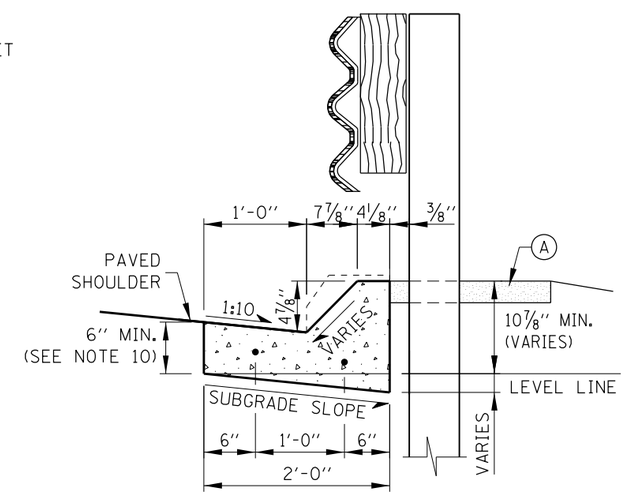

G-2 SECTION B-B
8'-9 1/4" FROM PARAPET

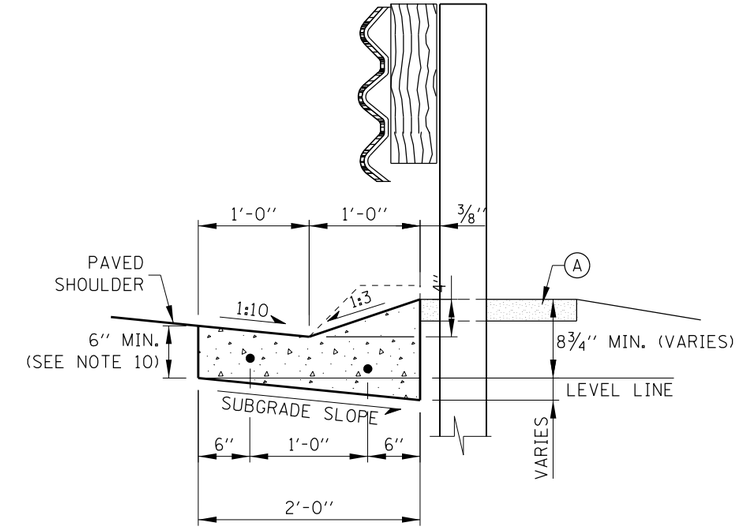

G-2 SECTION C-C
15'-0 1/4" FROM PARAPET

GUTTER, TYPE G-2 TRANSITION AT TRAFFIC BARRIER TERMINAL, TYPE T6 TO F-SHAPE CONCRETE PARAPET

SHEET 5 OF 6

LEGEND

(A) AGGREGATE SHOULDERS SPECIAL, TYPE C

NOTE:

SEE SHEET 1 OF THIS SERIES FOR GUTTER TRANSITION NOTES.

Paul Kovacs
APPROVED ..... DATE 2-7-2012
CHIEF ENGINEERING OFFICER

Illinois Tollway

TYPE G-2/G-3 GUTTER TRANSITION AT TRAFFIC BARRIER TERMINAL, TYPE T6

STANDARD B3-09

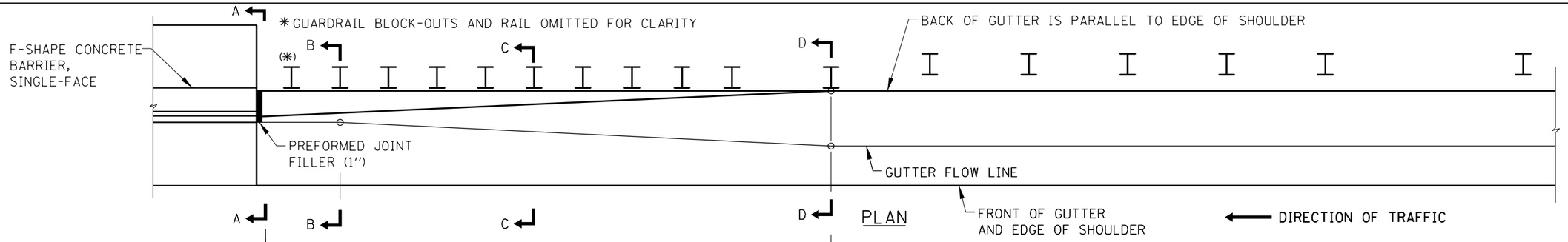

PLAN

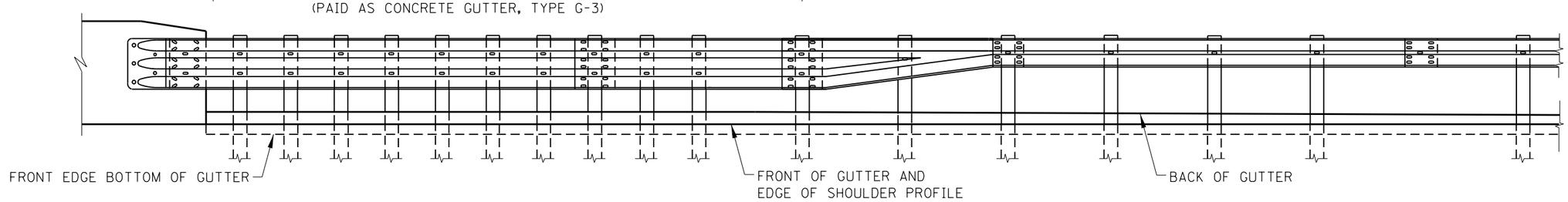

ELEVATION

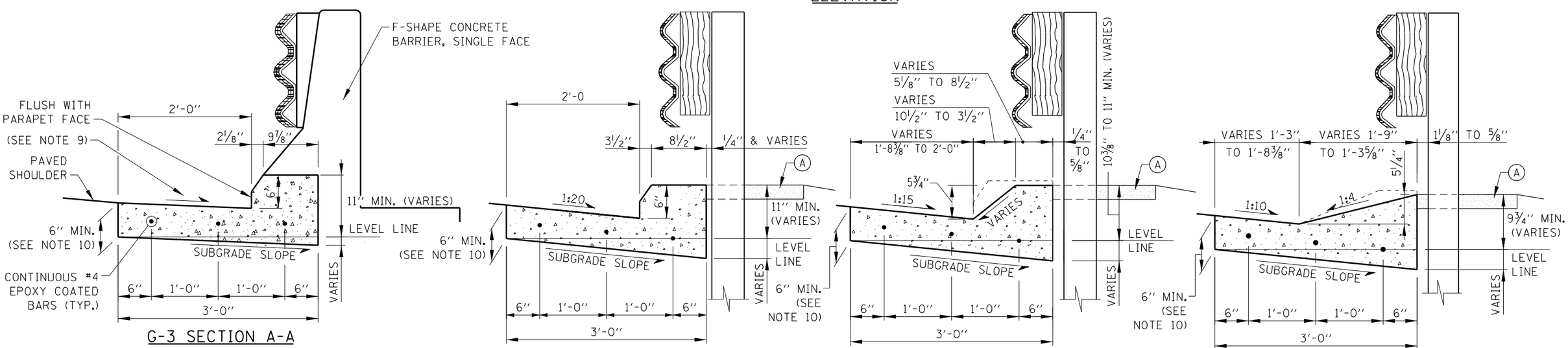

G-3 SECTION A-A
AT CONCRETE BARRIER, F-SHAPE
(SEE NOTE 7)

G-3 SECTION B-B
2'-6¼" FROM CONCRETE BARRIER

G-3 SECTION C-C
8'-9¼" FROM CONCRETE BARRIER

G-3 SECTION D-D
18'-1¾" FROM CONCRETE BARRIER

LEGEND

(A) AGGREGATE SHOULDERS SPECIAL, TYPE C

GUTTER, TYPE G-3 TRANSITION AT TRAFFIC BARRIER TERMINAL, TYPE T6, TO F-SHAPE CONCRETE BARRIER, SINGLE-FACE

NOTE:

SEE SHEET 1 OF THIS SERIES FOR GUTTER TRANSITION NOTES.

Illinois Tollway

TYPE G-2/G-3 GUTTER TRANSITION AT TRAFFIC BARRIER TERMINAL, TYPE T6

STANDARD B3-09

APPROVED Paul Kovacs
CHIEF ENGINEERING OFFICER
DATE 2-7-2012

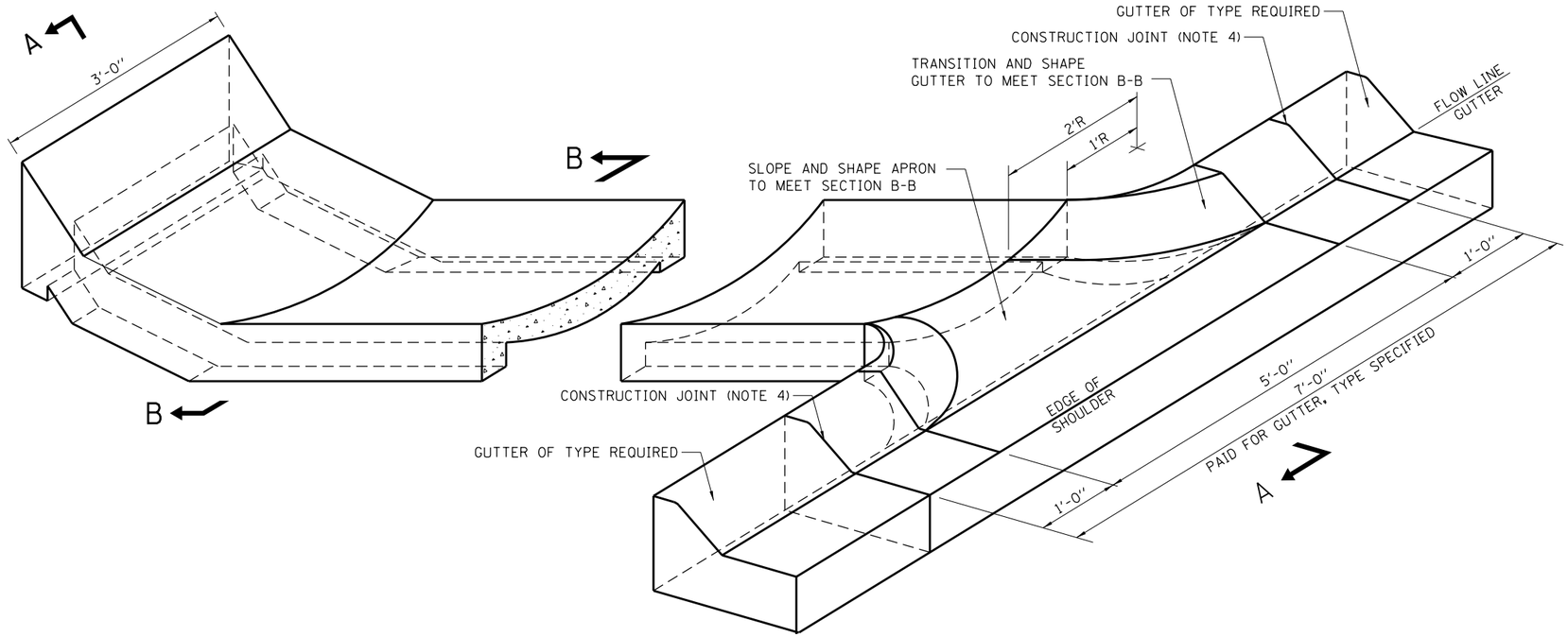

PLAN

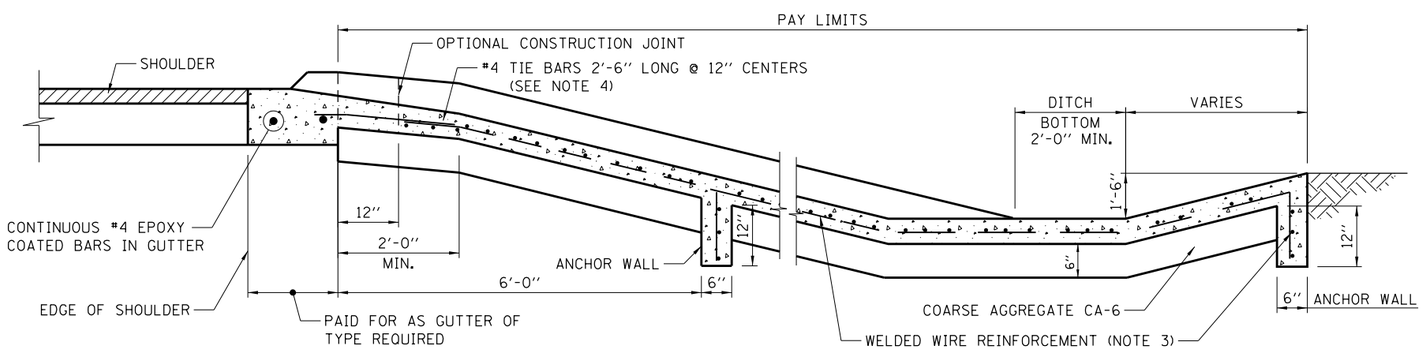

SECTION A-A
ADJACENT TO GUTTER

CONCRETE FLUME

NOTES:

1. CONCRETE FLUMES SHALL BE CONSTRUCTED FLUSH WITH THE ADJACENT EXISTING OR PROPOSED SURFACES.
2. CLASS SI CONCRETE SHALL BE USED THROUGHOUT.
3. WELDED WIRE REINFORCEMENT SHALL BE EPOXY COATED 6x6 W4xW4, 58 LBS. PER 100 SQ. FT.
4. #4 EPOXY COATED TIE BARS 2'-6" LONG AT 12" O/C SHALL BE PROVIDED AT ALL CONSTRUCTION JOINTS.
5. EPOXY COATED EXPANDED METAL FABRIC OF EQUIVALENT STRENGTH MAY BE USED IN LIEU OF WELDED WIRE REINFORCEMENT SUBJECT TO ENGINEER'S APPROVAL.
6. THE LOCATION OF THE ANCHOR WALL MAY BE ADJUSTED AS DIRECTED BY THE ENGINEER.
7. THE MATERIALS AND CONSTRUCTION OF THE CONCRETE FLUME SHALL CONFORM TO THE APPLICABLE PORTIONS OF THE STANDARD SPECIFICATIONS.

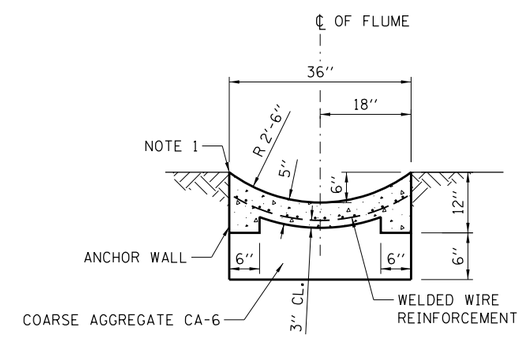

NOTE:
0.62 C.Y. CONCRETE / L.F.

SECTION B-B

DATE	REVISIONS
2-07-2012	REVISED NOTES
3-11-2015	DELETED CURB SECTION
3-31-2016	CHANGED TERMINOLOGY TO WELDED WIRE REINFORCEMENT
3-01-2018	REVISED SECTION A-A TO INCLUDE COARSE AGGREGATE NOTE 8 WAS REMOVED

Illinois Tollway

CONCRETE FLUME DETAILS

STANDARD B5-04

Paul Kovacs
APPROVED
CHIEF ENGINEERING OFFICER
DATE 2-7-2012

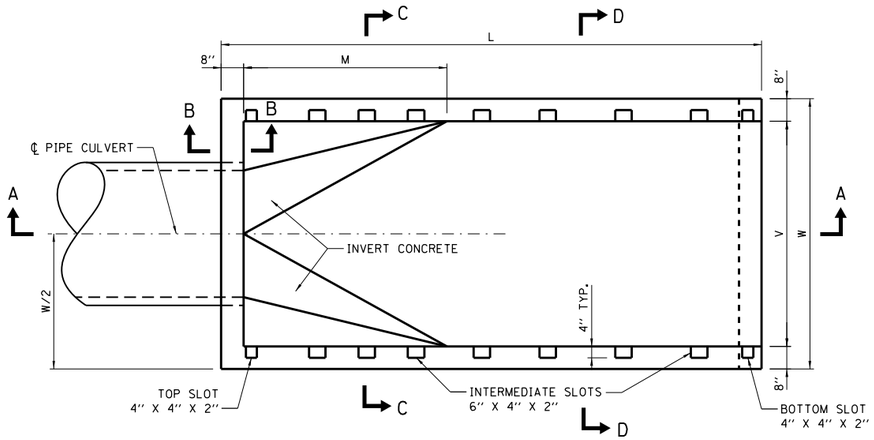

PLAN

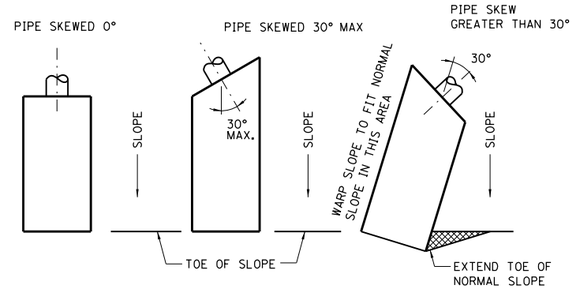

PLAN VIEW OF STRUCTURE LOCATIONS

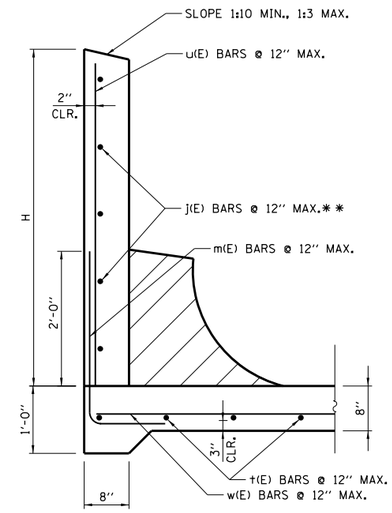

SECTION B-B

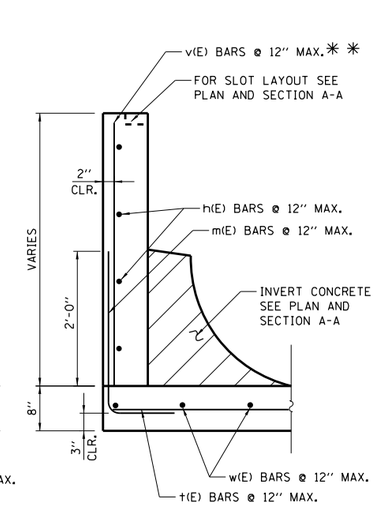

SECTION C-C

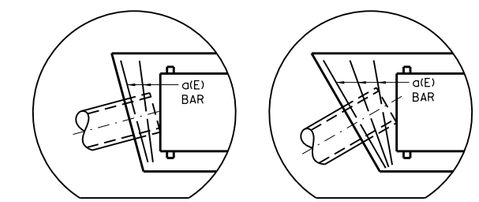

FLARED BAR DETAILS

NOTES:

ADDITIONAL "a" BARS SHALL BE FURNISHED AND PLACED BY THE CONTRACTOR. THE ADDITIONAL BARS ARE NOT INCLUDED IN THE LISTED QUANTITIES, BUT WILL BE PAID FOR AS REINFORCEMENT BARS (EPOXY COATED).

1 ADDITIONAL BAR REQUIRED FOR EACH 15° SKEW OR FRACTION THEREOF.

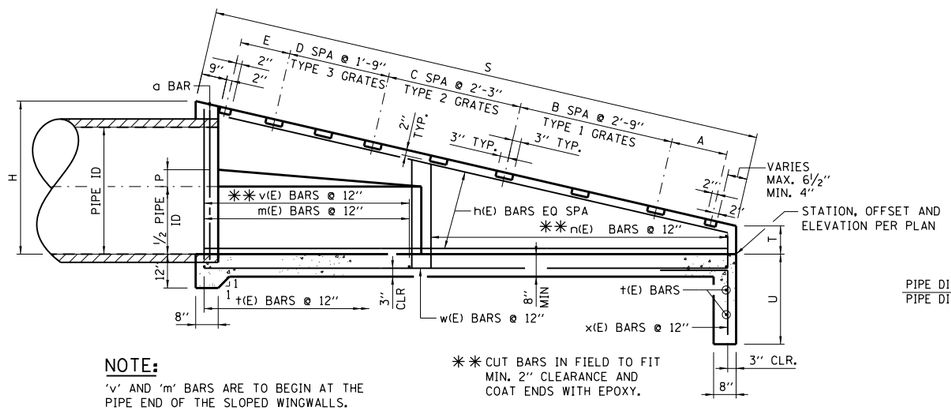

NOTE:

'v' AND 'm' BARS ARE TO BEGIN AT THE PIPE END OF THE SLOPED WINGWALLS.

✳✳ CUT BARS IN FIELD TO FIT MIN. 2'' CLEARANCE AND COAT ENDS WITH EPOXY.

SECTION A-A

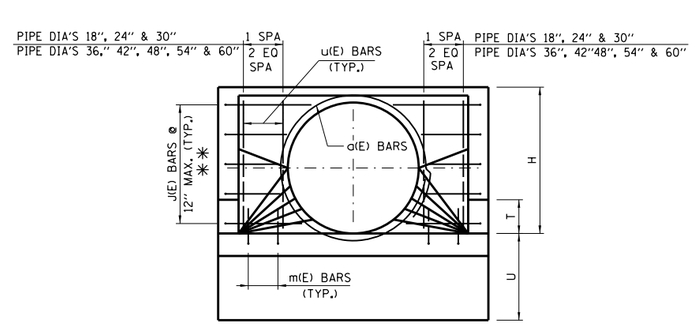

FRONT ELEVATION

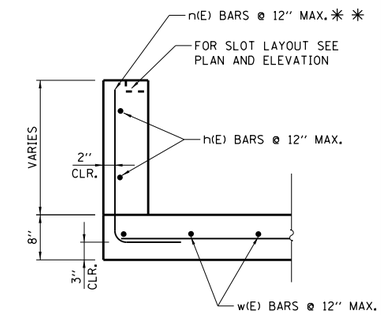

SECTION D-D

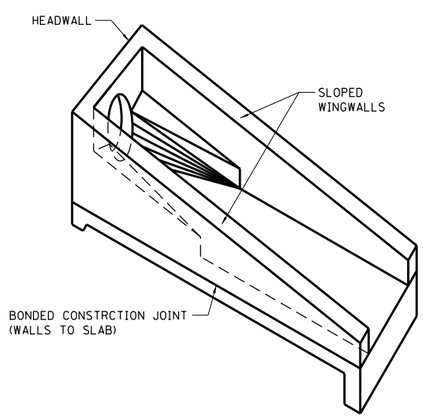

ISOMETRIC VIEW

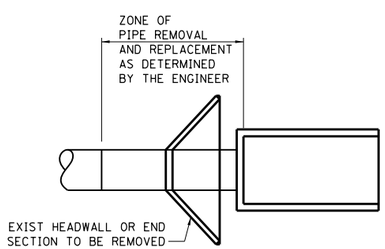

INSTALLATION DETAIL

NOTES:

1. HEADWALL TYPE III SHALL BE CONSTRUCTED FLUSH WITH EXISTING OR PROPOSED SLOPE.
2. CLASS SI CONCRETE SHALL BE USED THROUGHOUT.
3. ALL REINFORCEMENT BARS SHOWN SHALL BE EPOXY COATED (E).
4. BAR BENDING DETAILS ARE DIMENSIONED OUT TO OUT OF BARS.
5. ALL EXPOSED EDGES SHALL HAVE A ¾'' - 45° CHAMFER. CHAMFER ON VERTICAL EDGES SHALL BE CONTINUED A MINIMUM OF ONE FOOT BELOW THE FINISHED GROUND LINE.
6. COVER FROM THE FACE OF CONCRETE TO FACE OF REINFORCEMENT BAR SHALL BE 3'' FOR SURFACES FORMED AGAINST EARTH AND 2'' FOR ALL OTHER SURFACES UNLESS OTHERWISE SHOWN.
7. CARE SHALL BE EXERCISED IN REMOVING ANY LENGTH OF EXISTING PIPE SO THE REMAINING PIPE IS UNDAMAGED AND FULLY FUNCTIONING.
8. FOR DIMENSIONS AND QUANTITIES FOR ONE HEADWALL, SEE SHEET 2 IN THIS SERIES.
9. FOR STEEL GRATING DETAILS, SEE SHEET 3 IN THIS SERIES.
10. FOR ALTERNATE PRECAST CONCRETE DETAILS AND NOTES, SEE SHEET 4 IN THIS SERIES.
11. ALL SLOPES ARE EXPRESSED AS UNITS OF VERTICAL DISPLACEMENT TO UNITS OF HORIZONTAL DISPLACEMENT (V:H).

SHEET 1 OF 4

Illinois Tollway

HEADWALL TYPE III
18''-24''-30''-36''-42''-48''-54''-60''
FOR 1:3, 1:4, 1:6, AND
1:10 SLOPES

STANDARD B6-07

DATE	REVISIONS
3-31-2014	REVISED QUANTITIES-CONC REINF STEEL
3-11-2015	REVISED QUANTITIES, CONCRETE REINFORCEMENT
	STEEL AND PRECAST CONCRETE DETAILS
3-31-2016	ADDED NOTE TO OMIT RESTRAINT ANGLE AND
	THE PLATE FOR MULTI-END SECTIONS
	REVISED GRATE LAYOUT
3-01-2019	MINOR EDIT

Paul Kovacs
APPROVED . . . . . DATE 5-1-2009
CHIEF ENGINEERING OFFICER

DIMENSIONS AND QUANTITIES IN ONE HEADWALL TYPE III 1:3 SLOPE

PIPE DIA	DIMENSIONS											NO. OF SPACES			CONCRETE CLASS SI CU. YD.	REINF. BARS LB.
	H	L	M	P	S	T	U	V	W	A	E	B	C	D		
36''	3'-10''	11'-0''	3'-3''	4''	11'-7''	2''	2'-8''	6'-0''	7'-4''	2'-2''	1'-8''	0	2	1	3.8	347
42''	4'-5''	12'-9''	3'-10''	6''	13'-5''	2''	3'-2''	6'-6''	7'-10''	2'-2''	1'-8''	0	2	2	4.6	444
48''	5'-0''	14'-6''	4'-4''	6''	15'-3''	2''	3'-2''	7'-0''	8'-4''	1'-8''	1'-8''	0	0	6	5.5	502
54''	5'-6''	16'-0''	4'-10''	8''	16'-10''	2''	3'-6''	7'-6''	8'-10''	2'-2''	1'-8''	0	2	4	6.4	613
60''	6'-0''	17'-6''	5'-3''	8''	18'-5''	2''	3'-6''	8'-0''	9'-4''	2'-8''	1'-8''	2	0	4	7.3	668

DIMENSIONS AND QUANTITIES IN ONE HEADWALL TYPE III 1:4 SLOPE

PIPE DIA	DIMENSIONS											NO. OF SPACES			CONCRETE CLASS SI CU. YD.	REINF. BARS LB.
	H	L	M	P	S	T	U	V	W	A	E	B	C	D		
36''	3'-10''	14'-8''	4'-5''	4''	15'-2''	2''	2'-8''	6'-0''	7'-4''	2'-8''	2'-8''	3	0	0	4.7	415
42''	4'-5''	17'-0''	5'-1''	6''	17'-6''	2''	3'-2''	6'-6''	7'-10''	2'-8''	2'-2''	0	5	0	5.8	546
48''	5'-0''	19'-4''	5'-10''	6''	19'-11''	2''	3'-2''	7'-0''	8'-4''	2'-8''	2'-2''	0	6	0	6.9	625
54''	5'-6''	21'-4''	6'-5''	8''	22'-0''	2''	3'-6''	7'-6''	8'-10''	2'-8''	2'-2''	0	7	0	8.0	788
60''	6'-0''	23'-4''	7'-0''	8''	24'-1''	2''	3'-6''	8'-0''	9'-4''	1'-8''	1'-8''	0	0	11	9.1	837

DIMENSIONS AND QUANTITIES IN ONE HEADWALL TYPE III 1:6 SLOPE

PIPE DIA	DIMENSIONS											NO OF SPACES			CONCRETE CLASS SI CU. YD.	REINF. BARS LB.
	H	L	M	P	S	T	U	V	W	A	E	B	C	D		
36''	3'-10''	22'-0''	6'-8''	4''	22'-4''	2''	2'-8''	6'-0''	7'-4''	1'-8''	1'-8''	0	0	10	7.5	573
42''	4'-5''	25'-6''	7'-8''	6''	25'-10''	2''	3'-2''	6'-6''	7'-10''	1'-8''	1'-8''	0	0	12	9.5	746
48''	5'-0''	29'-0''	8'-9''	6''	29'-5''	2''	3'-2''	7'-0''	8'-4''	1'-8''	1'-8''	0	0	14	11.7	863
54''	5'-6''	32'-0''	9'-8''	8''	32'-5''	2''	3'-6''	7'-6''	8'-10''	2'-2''	1'-8''	0	5	9	13.9	1047
60''	6'-0''	35'-0''	10'-6''	8''	35'-6''	2''	3'-6''	8'-0''	9'-4''	2'-2''	1'-8''	0	1	16	16.3	1177

DIMENSIONS AND QUANTITIES IN ONE HEADWALL TYPE III 1:10 SLOPE

PIPE DIA	DIMENSIONS											NO OF SPACES			CONCRETE CLASS SI CU. YD.	REINF. BAR LBS.
	H	L	M	P	S	T	U	V	W	A	E	B	C	D		
18''	2'-3''	20'-10''	6'-3''	2''	20'-11½''	2''	2'-8''	3'-0''	4'-4''	2'-8''	2'-2''	2	4	0	4.1	368
24''	2'-9''	25'-10''	7'-9''	3''	25'-11½''	2''	2'-8''	4'-0''	5'-4''	1'-8''	1'-8''	0	0	12	6.1	490
30''	3'-4''	31'-8''	9'-6''	4''	31'-10''	2''	2'-8''	5'-0''	6'-4''	2'-8''	2'-2''	6	4	0	8.8	705
36''	3'-10''	36'-8''	11'-0''	4''	36'-10½''	2''	2'-8''	6'-0''	7'-4''	2'-8''	2'-2''	7	5	0	11.9	944
42''	4'-5''	42'-6''	12'-9''	6''	42'-8½''	2''	3'-2''	6'-6''	7'-10''	2'-8''	2'-8''	13	0	0	15.2	1178
48''	5'-0''	48'-4''	14'-6''	6''	48'-7''	2''	3'-2''	7'-0''	8'-4''	2'-2''	2'-2''	0	19	0	18.8	1457
54''	5'-6''	53'-4''	16'-0''	8''	53'-7½''	2''	3'-6''	7'-6''	8'-10''	2'-8''	2'-8''	17	0	0	22.4	1687
60''	6'-0''	58'-4''	17'-6''	8''	58'-7½''	2''	3'-6''	8'-0''	9'-4''	2'-8''	2'-2''	19	0	0	26.2	1964

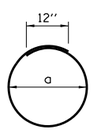

TYPE 1

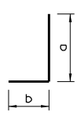

TYPE 2

REINFORCEMENT BARS SCHEDULE FOR ONE HEADWALL

TYPE III 1:10 SLOPE

PIPE DIA	NO 4 REINFORCEMENT BARS						
	MARK(E)	TYPE	NO REQ'D	LENGTH	a	b	
18''	a18	1	1	8'-7''	2'-5''	-	
	n18	2	32	2'-7''	1'-10''	9''	*
	m18	2	18	3'-2''	2'-5''	9''	
	j18	2	6	4'-0''	2'-0''	2'-0''	*
	h18	STR.	6	20'-8''	-	-	
	x18	2	5	4'-3''	2'-3''	2'-0''	
	t18	STR.	23	4'-0''	-	-	
	u18	STR.	4	2'-1''	-	-	
	v18	STR.	14	2'-1''	-	-	*
	w18	STR.	5	20'-6''	-	-	
24''	a24	1	1	10'-5''	3'-0''	-	
	n24	2	38	2'-11''	2'-2''	9''	*
	m24	2	20	3'-2''	2'-5''	9''	
	j24	2	6	4'-0''	2'-0''	2'-0''	
	h24	STR.	6	25'-8''	-	-	
	x24	2	6	4'-3''	2'-3''	2'-0''	
	t24	STR.	28	5'-0''	-	-	
	u24	STR.	4	2'-7''	-	-	
	v24	STR.	16	2'-7''	-	-	*
	w24	STR.	6	25'-6''	-	-	
30''	a30	1	1	12'-3''	3'-7''	-	
	n30	2	46	3'-4''	2'-7''	9''	*
	m30	2	24	3'-2''	2'-5''	9''	
	j30	2	8	4'-0''	2'-0''	2'-0''	*
	h30	STR.	8	31'-6''	-	-	
	x30	2	7	4'-3''	2'-3''	2'-0''	
	t30	STR.	34	6'-0''	-	-	
	u30	STR.	4	3'-2''	-	-	
	v30	STR.	20	3'-2''	-	-	*
	w30	STR.	7	31'-4''	-	-	
36''	a36	1	1	13'-10''	4'-1''	-	
	n36	2	52	3'-8''	2'-11''	9''	*
	m36	2	30	3'-2''	2'-5''	9''	
	j36	2	10	4'-0''	2'-0''	2'-0''	*
	h36	STR.	10	36'-6''	-	-	
	x36	2	8	4'-3''	2'-3''	2'-0''	
	t36	STR.	39	7'-0''	-	-	
	u36	STR.	6	3'-8''	-	-	
	v36	STR.	24	3'-8''	-	-	*
	w36	STR.	8	36'-4''	-	-	
42''	a42	1	1	15'-11''	4'-9''	-	
	n42	2	62	3'-8''	2'-11''	9''	*
	m42	2	34	3'-2''	2'-5''	9''	
	j42	2	10	4'-0''	2'-0''	2'-0''	*
	h42	STR.	20	22'-2''	-	-	**
	x42	2	9	4'-7''	2'-7''	2'-0''	
	t42	STR.	46	7'-6''	-	-	
	u42	STR.	6	4'-3''	-	-	
	v42	STR.	28	4'-3''	-	-	*
	w42	STR.	18	22'-1''	-	-	**
48''	a48	1	1	17'-9''	5'-4''	-	
	n48	2	70	4'-6''	3'-9''	9''	*
	m48	2	36	3'-2''	2'-5''	9''	
	j48	2	12	4'-0''	2'-0''	2'-0''	*
	h48	STR.	24	25'-2''	-	-	**
	x48	2	9	4'-7''	2'-7''	2'-0''	
	t48	STR.	52	8'-0''	-	-	
	u48	STR.	6	4'-10''	-	-	
	v48	STR.	30	4'-10''	-	-	*
	w48	STR.	18	25'-0''	-	-	**
54''	a54	1	1	19'-7''	5'-11''	-	
	n54	2	76	4'-10''	4'-1''	9''	*
	m54	2	40	3'-2''	2'-5''	9''	
	j54	2	12	4'-0''	2'-0''	2'-0''	*
	h54	STR.	24	27'-8''	-	-	**
	x54	2	10	5'-1''	3'-1''	2'-0''	
	t54	STR.	57	8'-6''	-	-	
	u54	STR.	6	5'-4''	-	-	
	v54	STR.	34	5'-4''	-	-	*
	w54	STR.	20	27'-6''	-	-	**
60''	a60	1	1	21'-2''	6'-5''	-	
	n60	2	82	5'-3''	4'-6''	9''	*
	m60	2	42	3'-2''	2'-5''	9''	
	j60	2	14	4'-0''	2'-0''	2'-0''	*
	h60	STR.	28	30'-2''	-	-	**
	x60	2	10	5'-1''	3'-1''	2'-0''	
	t60	STR.	62	9'-0''	-	-	
	u60	STR.	6	5'-10''	-	-	
	v60	STR.	36	5'-10''	-	-	*
	w60	STR.	20	30'-0''	-	-	**

REINFORCEMENT BARS SCHEDULE FOR ONE HEADWALL

TYPE III 1:6 SLOPE

PIPE DIA	NO 4 REINFORCEMENT BARS						
	MARK(E)	TYPE	NO REQ'D	LENGTH	a	b	
36''	a36	1	1	13'-10''	4'-1''	-	
	n36	2	32	3'-8''	2'-11''	9''	*
	m36	2	20	3'-2''	2'-5''	9'	
	j36	2	8	4'-0''	2'-0''	2'-0''	*
	h36	STR.	8	22'-0''	-	-	
	x36	2	8	4'-3''	2'-0''	2'-0''	
	t36	STR.	25	7'-0''	-	-	
	u36	STR.	6	3'-7''	-	-	
	v36	STR.	14	3'-7''	-	-	*
	w36	STR.	8	21'-8''	-	-	
42''	a42	1	1	15'-11''	4'-9''	-	
	n42	2	38	4'-2''	3'-5''	9''	*
	m42	2	22	3'-2''	2'-5''	9''	
	j42	2	10	4'-0''	2'-0''	2'-0''	*
	h42	STR.	10	25'-6''	-	-	
	x42	2	9	4'-7''	2'-7''	2'-0''	
	t42	STR.	29	7'-6''	-	-	
	u42	STR.	6	4'-2''	-	-	
	v42	STR.	16	4'-2''	-	-	*
	w42	STR.	9	25'-2''	-	-	
48''	a48	1	1	17'-9''	5'-4''	-	
	n48	2	42	4'-6''	3'-9''	9''	*
	m48	2	24	3'-2''	2'-5''	9''	
	j48	2	10	4'-0''	2'-0''	2'-0''	*
	h48	STR.	10	29'-1''	-	-	
	x48	2	9	4'-7''	2'-7''	2'-0''	
	t48	STR.	33	8'-0''	-	-	
	u48	STR.	6	4'-9''	-	-	
	v48	STR.	18	4'-9''	-	-	*
	w48	STR.	9	28'-8''	-	-	
54''	a54	1	1	19'-7''	5'-11''	-	
	n54	2	46	4'-10''	4'-1''	9''	*
	m54	2	26	3'-2''	2'-5''	9''	
	j54	2	12	4'-0''	2'-0''	2'-0''	*
	h54	STR.	12	32'-1''	-	-	
	x54	2	10	5'-1''	3'-1''	2'-0''	
	t54	STR.	36	8'-6''	-	-	
	u54	STR.	6	5'-3''	-	-	
	v54	STR.	20	5'-3''	-	-	*
	w54	STR.	10	31'-8''	-	-	
60''	a60	1	1	21'-2''	6'-5''	-	
	n60	2	50	5'-3''	4'-6''	9''	*
	m60	2	28	3'-2''	2'-5''	9''	
	j60	2	12	4'-0''	2'-0''	2'-0''	*
	h60	STR.	12	35'-2''	-	-	**
	x60	2	10	5'-1''	3'-1''	2'-0''	
	t60	STR.	40	9'-0''	-	-	
	u60	STR.	6	5'-9''	-	-	
	v60	STR.	22	5'-9''	-	-	*
	w60	STR.	10	34'-8''	-	-	**

REINFORCEMENT BARS SCHEDULE FOR ONE HEADWALL

TYPE III 1:4 SLOPE

PIPE DIA	NO 4 REINFORCEMENT BARS						
	MARK(E)	TYPE	NO REQ'D	LENGTH	a	b	
36''	a36	1	1	13'-10''	4'-1''	-	
	n36	2	22	3'-8''	2'-11''	9''	*
	m36	2	16	3'-2''	2'-5''	9''	
	j36	2	8	4'-0''	2'-0''	2'-0''	*
	h36	STR.	8	14'-10''	-	-	
	x36	2	8	4'-3''	2'-3''	2'-0''	
	t36	STR.	17	7'-0''	-	-	
	u36	STR.	6	3'-7''	-	-	
	v36	STR.	10	3'-7''	-	-	*
	w36	STR.	8	14'-4''	-	-	
42''	a42	1	1	15'-11''	4'-9''	-	
	n42	2	26	4'-2''	3'-5''	9''	*
	m42	2	18	3'-2''	2'-5''	9''	
	j42	2	10	4'-0''	2'-0''	2'-0''	*
	h42	STR.	10	17'-2''	-	-	
	x42	2	9	4'-7''	2'-7''	2'-0''	
	t42	STR.	21	7'-6''	-	-	
	u42	STR.	6	4'-2''	-	-	
	v42	STR.	12	4'-2''	-	-	*
	w42	STR.	9	16'-8''	-	-	
48''	a48	1	1	17'-9''	5'-4''	-	
	n48	2	28	4-6''	3'-9''	9''	*
	m48	2	20	3'-2''	2'-5''	9''	
	j48	2	10	4'-0''	2'-0''	2'-0''	*
	h48	STR.	10	19'-7''	-	-	
	x48	2	9	4'-7''	2'-7''	2'-0''	
	t48	STR.	23	8'-0''	-	-	
	u48	STR.	6	4'-9''	-	-	
	v48	STR.	14	4'-9''	-	-	*
	w48	STR.	9	19'-0''	-	-	
54''	a54	1	1	19'-7''	5'-11''	-	
	n54	2	30	6'-2''	5'-5''	9''	*
	m54	2	22	3'-2''	2'-5''	9''	
	j54	2	12	4'-0''	2'-0''	2'-0''	*
	h54	STR.	12	21'-8''	-	-	
	x54	2	10	5'-1''	3'-1''	2'-0''	
	t54	STR.	26	8'-6''	-	-	
	u54	STR.	6	5'-3''	-	-	
	v54	STR.	16	5'-3''	-	-	*
	w54	STR.	10	21'-0''	-	-	
60''	a60	1	1	21'-2''	6'-5''	-	
	n60	2	34	5'-3''	4'-6''	9''	*
	m60	2	22	3'-2''	2'-5''	9''	
	j60	2	12	4'-0''	2'-0''	2'-0''	*
	h60	STR.	12	23'-9''	-	-	
	x60	2	10	5'-1''	3'-1''	2'-0''	
	t60	STR.	27	9'-0''	-	-	
	u60	STR.	6	5'-9''	-	-	
	v60	STR.	16	5'-9''	-	-	*
	w60	STR.	10	23'-0''	-	-	

REINFORCEMENT BARS SCHEDULE FOR ONE HEADWALL

TYPE III 1:3 SLOPE

PIPE DIA	NO 4 REINFORCEMENT BARS						
	MARK(E)	TYPE	NO REQ'D	LENGTH	a	b	
36''	a36	1	1	13'-10''	4'-1''	-	
	n36	2	18	3'-8''	2'-11''	9''	*
	m36	2	14	3'-2''	2'-5''	9''	
	j36	2	8	4'-0''	2'-0''	2'-0''	*
	h36	STR.	8	11'-10''	-	-	
	x36	2	8	4'-3''	2'-3''	2'-0''	
	t36	STR.	14	7'-0''	-	-	
	u36	STR.	6	3'-7''	-	-	
	v36	STR.	8	3'-7''	-	-	*
	w36	STR.	8	10'-8''	-	-	
42''	a42	1	1	15'-11''	4'-9''	-	
	n42	2	20	4'-1''	3'-4''	9''	*
	m42	2	16	3'-2''	2'-5''	9''	
	j42	2	10	4'-0''	2'-0''	2'-0''	*
	h42	STR.	10	13'-8''	-	-	
	x42	2	9	4'-7''	2'-7''	2'-0''	
	t42	STR.	16	7'-6''	-	-	
	u42	STR.	6	4'-2''	-	-	
	v42	STR.	10	4'-2''	-	-	*
	w42	STR.	9	12'-5''	-	-	
48''	a48	1	1	17'-9''	5'-4''	-	
	n48	2	22	4'-6''	3'-9''	9''	*
	m48	2	16	3'-2''	2'-5''	9''	
	j48	2	10	4'-0''	2'-0''	2'-0''	*
	h48	STR.	10	15'-6''	-	-	
	x48	2	9	4'-7''	2'-7''	2'-0''	
	t48	STR.	18	8'-0''	-	-	
	u48	STR.	6	4'-9''	-	-	
	v48	STR.	10	4'-9''	-	-	*
	w48	STR.	9	14'-2''	-	-	
54''	a54	1	1	19'-7''	5'-11''	-	
	n54	2	24	4'-10''	4'-1''	9''	*
	m54	2	18	3'-2''	2'-5''	9''	
	j54	2	12	4'-0''	2'-0''	2'-0''	*
	h54	STR.	12	17'-1''	-	-	
	x54	2	10	5'-1''	3'-1''	2'-0''	
	t54	STR.	20	8'-6''	-	-	
	u54	STR.	6	5'-3''	-	-	
	v54	STR.	12	5'-3''	-	-	*
	w54	STR.	10	15'-8''	-	-	
60''	a60	1	1	21'-2''	6'-5''	-	
	n60	2	26	5'-2''	4'-5''	9''	*
	m60	2	18	3'-2''	2'-5''	9''	
	j60	2	12	4'-0''	2'-0''	2'-0''	*
	h60	STR.	12	18'-8''	-	-	
	x60	2	10	5'-1''	3'-1''	2'-0''	
	t60	STR.	21	9'-0''	-	-	
	u60	STR.	6	5'-9''	-	-	
	v60	STR.	12	5'-9''	-	-	*
	w60	STR.	10	17'-2''	-	-	

* CUT BARS IN FIELD TO FIT MIN. 2'' CLEARANCE
** PROVIDE 2'-0'' MIN. LAP

NOTES:

1. THE 'v', 'n' and 'j' BARS, TYPE 3, SHALL BE ORDERED FULL LENGTH AND CUT IN THE FIELD.
2. THE LONG LEG OF THE 'm' AND 'n' BARS SHALL BE VERTICAL.
3. QUANTITIES ON THIS DRAWING ARE BASED ON THE CAST-IN-PLACE DESIGN. SEE SHEET 4 IN THIS SERIES FOR ALTERNATE PRECAST CONCRETE NOTES.
4. "STR." = STRAIGHT BAR
5. ALL SLOPES ARE EXPRESSED AS UNITS OF VERTICAL DISPLACEMENT TO UNITS OF HORIZONTAL DISPLACEMENT (V:H).

Paul Kovacs
APPROVED . . . . . DATE 5-1-2009
CHIEF ENGINEERING OFFICER

SHEET 2 OF 4

Illinois Tollway

HEADWALL TYPE III
18''-24''-30''-36''-42''-48''-54''-60''
FOR 1:3, 1:4, 1:6, AND
1:10 SLOPES

STANDARD B6-07

GRATE DIMENSIONS AND QUANTITIES IN ONE HEADWALL TYPE III END ENTRANCE 1:3 SLOPE

INSIDE PIPE DIAMETER	GRATES		BARS FOR ONE GRATE				HEADWALL GRATES (POUND)	
	NUMBER REQUIRED	TYPE REQ'D	BAR NO 1		BAR NO 2			
			BARS REQ'D	LENGTH	BARS REQ'D	LENGTH	EACH GRATE	TOTAL
36''	0	1	2	6'-7''	11	2'-4½''	112	493
	3	2	2	6'-7''	11	1'-10½''	102	
	2	3	2	6'-7''	11	1'-4½''	93	
42''	0	1	2	7'-1''	12	2'-4½''	121	633
	3	2	2	7'-1''	12	1'-10½''	110	
	3	3	2	7'-1''	12	1'-4½''	100	
48''	0	1	2	7'-7''	13	2'-4½''	130	863
	0	2	2	7'-7''	13	1'-10½''	119	
	8	3	2	7'-7''	13	1'-4½''	108	
54''	0	1	2	8'-1''	14	2'-4½''	139	958
	3	2	2	8'-1''	14	1'-10½''	127	
	5	3	2	8'-1''	14	1'-4½''	115	
60''	3	1	2	8'-7''	15	2'-4½''	148	1058
	0	2	2	8'-7''	15	1'-10½''	135	
	5	3	2	8'-7''	15	1'-4½''	123	

GRATE DIMENSIONS AND QUANTITIES IN ONE HEADWALL TYPE III END ENTRANCE 1:4 SLOPE

INSIDE PIPE DIAMETER	GRATES		BARS FOR ONE GRATE				HEADWALL GRATES (POUND)	
	NUMBER REQUIRED	TYPE REQ'D	BAR NO 1		BAR NO 2			
			BARS REQ'D	LENGTH	BARS REQ'D	LENGTH	EACH GRATE	TOTAL
36''	5	1	2	6'-7''	11	2'-4½''	112	558
	0	2	2	6'-7''	11	1'-10½''	102	
	0	3	2	6'-7''	11	1'-4½''	93	
42''	1	1	2	7'-1''	12	2'-4½''	121	784
	6	2	2	7'-1''	12	1'-10½''	110	
	0	3	2	7'-1''	12	1'-4½''	100	
48''	1	1	2	7'-7''	13	2'-4½''	130	962
	7	2	2	7'-7''	13	1'-10½''	119	
	0	3	2	7'-7''	13	1'-4½''	108	
54''	1	1	2	8'-1''	14	2'-4½''	139	1157
	8	2	2	8'-1''	14	1'-10½''	127	
	0	3	2	8'-1''	14	1'-4½''	115	
60''	0	1	2	8'-7''	15	2'-4½''	148	1595
	0	2	2	8'-7''	15	1'-10½''	135	
	13	3	2	8'-7''	15	1'-4½''	123	

GRATE DIMENSIONS AND QUANTITIES IN ONE HEADWALL TYPE III END ENTRANCE 1:6 SLOPE

INSIDE PIPE DIAMETER	GRATES		BARS FOR ONE GRATE				HEADWALL GRATES (POUND)	
	NUMBER REQUIRED	TYPE REQ'D	BAR NO 1		BAR NO 2			
			BARS REQ'D	LENGTH	BARS REQ'D	LENGTH	EACH GRATE	TOTAL
36''	0	1	2	6'-7''	11	2'-4½''	112	1115
	0	2	2	6'-7''	11	1'-10½''	102	
	12	3	2	6'-7''	11	1'-4½''	93	
42''	0	1	2	7'-1''	12	2'-4½''	121	1405
	0	2	2	7'-1''	12	1'-10½''	110	
	14	3	2	7'-1''	12	1'-4½''	100	
48''	0	1	2	7'-7''	13	2'-4½''	130	1725
	0	2	2	7'-7''	13	1'-10½''	119	
	16	3	2	7'-7''	13	1'-4½''	108	
54''	0	1	2	8'-1''	14	2'-4½''	139	1916
	6	2	2	8'-1''	14	1'-10½''	127	
	10	3	2	8'-1''	14	1'-4½''	115	
60''	0	1	2	8'-7''	15	2'-4½''	148	2357
	2	2	2	8'-7''	15	1'-10½''	135	
	17	3	2	8'-7''	15	1'-4½''	123	

GRATE DIMENSIONS AND QUANTITIES IN ONE HEADWALL TYPE III END ENTRANCE 1:10 SLOPE

INSIDE PIPE DIAMETER	GRATES		BARS FOR ONE GRATE				HEADWALL GRATES (POUND)	
	NUMBER REQUIRED	TYPE REQ'D	BAR NO 1		BAR NO 2			
			BARS REQ'D	LENGTH	BARS REQ'D	LENGTH	EACH GRATE	TOTAL
18''	3	1	2	3'-7''	5	2'-4½''	57	433
	5	2	2	3'-7''	5	1'-10½''	52	
	0	3	2	3'-7''	5	1'-4½''	48	
24''	0	1	2	4'-7''	7	2'-4½''	75	884
	0	2	2	4'-7''	7	1'-10½''	69	
	14	3	2	4'-7''	7	1'-4½''	63	
30''	7	1	2	5'-7''	9	2'-4½''	93	1082
	5	2	2	5'-7''	9	1'-10½''	86	
	0	3	2	5'-7''	9	1'-4½''	78	
36''	8	1	2	6'-7''	11	2'-4½''	112	1507
	6	2	2	6'-7''	11	1'-10½''	102	
	0	3	2	6'-7''	11	1'-4½''	93	
42''	15	1	2	7'-1''	12	2'-4½''	121	1812
	0	2	2	7'-1''	12	1'-10½''	110	
	0	3	2	7'-1''	12	1'-4½''	100	
48''	0	1	2	7'-7''	13	2'-4½''	130	2497
	21	2	2	7'-7''	13	1'-10½''	119	
	0	3	2	7'-7''	13	1'-10½''	108	
54''	19	1	2	8'-1''	14	2'-4½''	139	2643
	0	2	2	8'-1''	14	1'-10½''	127	
	0	3	2	8'-1''	14	1'-4½''	115	
60''	20	1	2	8'-7''	15	2'-4½''	148	3100
	1	2	2	8'-7''	15	1'-10½''	135	
	0	3	2	8'-7''	15	1'-4½''	123	

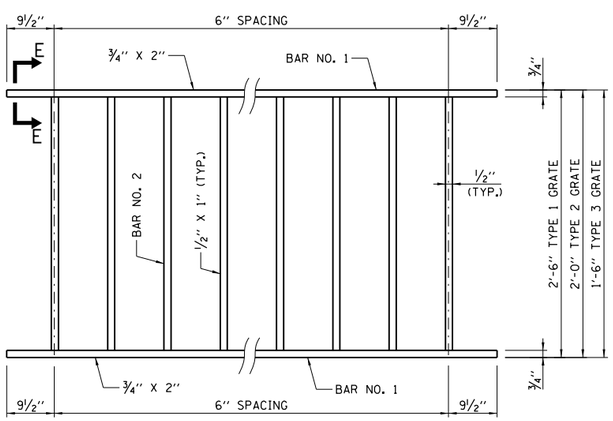

TYPICAL GRATE

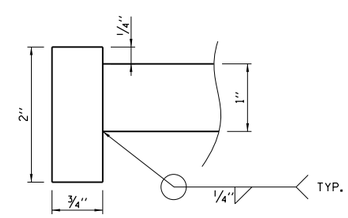

SECTION E-E

NOTES:

1. ALL STRUCTURAL STEEL SHALL BE AASHTO M270, GRADE 36 OR 50.
2. GALVANIZING SHALL BE IN ACCORDANCE WITH THE STANDARD SPECIFICATIONS.
3. FOR PLACEMENT OF GRATES, SEE SHEET 1 IN THIS SERIES.
4. ALL TABLE DIMENSIONS AND QUANTITIES ARE FOR SINGLE HEADWALL, TYPE III.
5. ALL SLOPES ARE EXPRESSED AS UNITS OF VERTICAL DISPLACEMENT TO UNITS OF HORIZONTAL DISPLACEMENT (V:H).

Paul Kovacs
APPROVED ..... DATE 5-1-2009
CHIEF ENGINEERING OFFICER

Illinois Tollway

HEADWALL TYPE III
18''-24''-30''-36''-42''-48''-54''-60''
FOR 1:3, 1:4, 1:6, AND
1:10 SLOPES

STANDARD B6-07

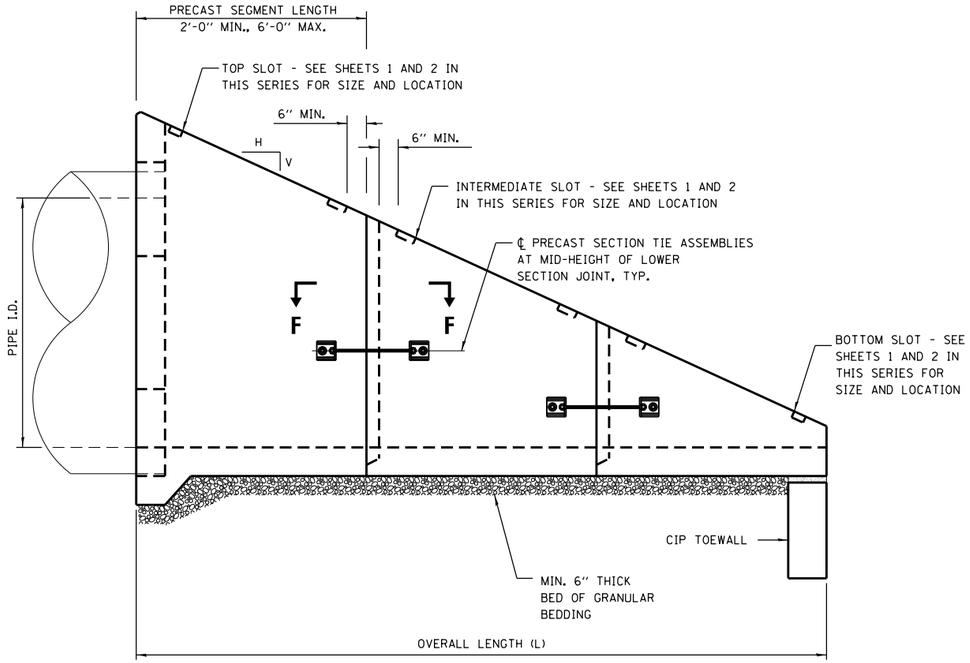

ELEVATION

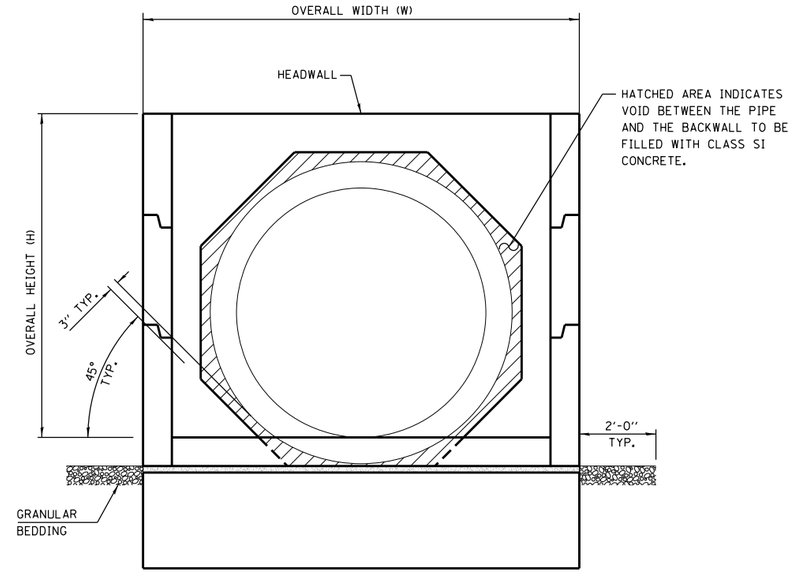

END VIEW

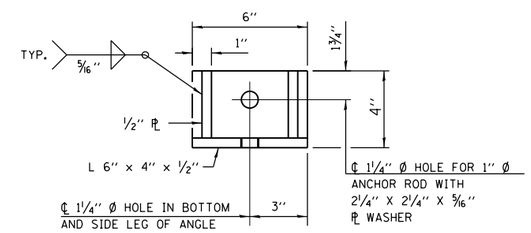

RESTRAINT ANGLE DETAIL

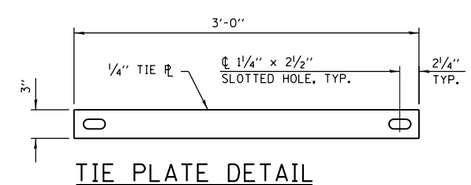

TIE PLATE DETAIL

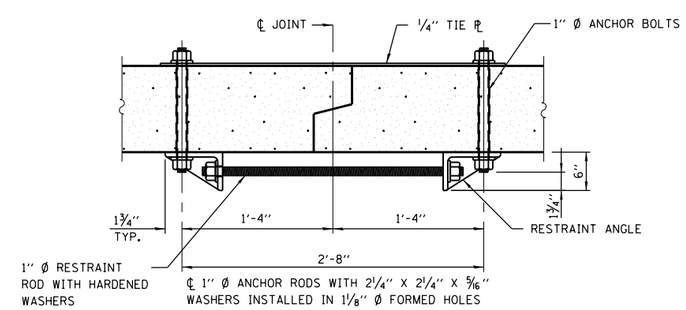

SECTION F-F

(SHOWING PRECAST SECTION TIE DETAILS)

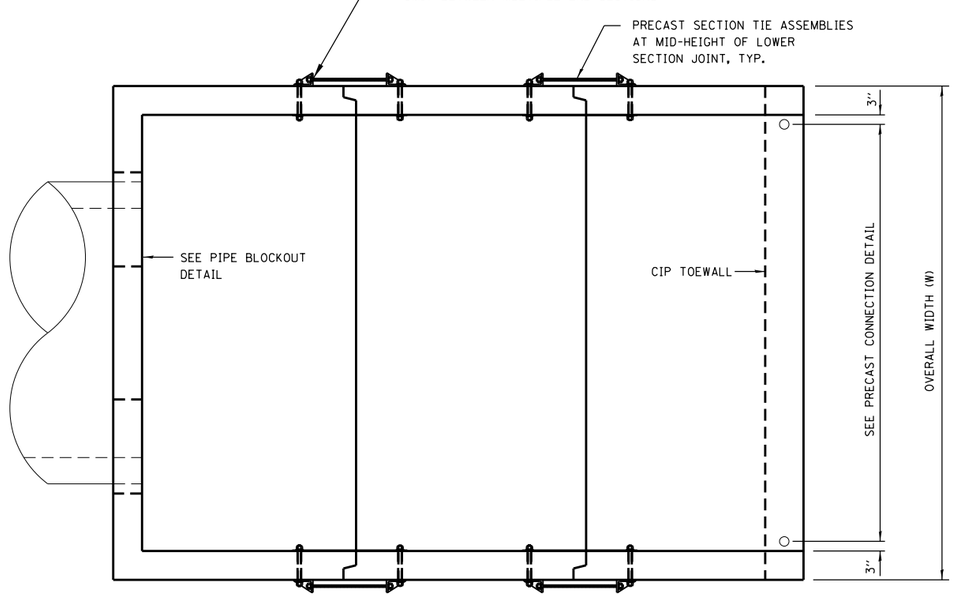

PLAN

GENERAL NOTES:

1. THE NUMBER OF SEGMENTS SHOWN IN ELEVATION IS FOR EXAMPLE ONLY. THE LENGTH AND NUMBER OF PRECAST SECTIONS REQUIRED TO CONSTRUCT THE END SECTION SHALL BE DETERMINED BY THE CONTRACTOR.
2. CONTRACTOR SHALL RETAIN THE SERVICES OF AN ILLINOIS LICENSED STRUCTURAL ENGINEER TO PROPORTION, DESIGN AND DETAIL PRECAST SECTIONS FOR INSTALLATION AND FOR SERVICE. SEE CAST-IN-PLACE DIMENSIONS AND REINFORCING DETAILS FOR MINIMUM REQUIREMENTS. INCREASE MEMBER SIZES AND REINFORCING AS NECESSARY TO SATISFY HANDLING AND INSTALLATION STRESSES IN PRECAST SECTIONS.
3. CLASS "SI" CONCRETE SHALL BE USED THROUGHOUT.
4. REINFORCEMENT BARS (GRADE 60) SHALL BE EPOXY COATED. SEE CAST-IN-PLACE DETAILS FOR BENDING DIAGRAMS. SEE NOTES ON SHEET 1 IN THIS SERIES FOR REINFORCING COVER REQUIREMENTS.
5. ALL EXPOSED EDGES SHALL BE CHAMFERED. SEE NOTES ON SHEET 1 IN THIS SERIES.
6. SEE ROADWAY PLANS FOR SLOPE (V:H) AND PIPE INSIDE DIAMETER.
7. HOLES IN THE WALLS FOR THE PRECAST TIE ASSEMBLY MAY BE DRILLED USING CORE BITS IN LIEU OF FORMED HOLES. AVOID DAMAGE TO REINFORCING FROM DRILLING HOLES.
8. FOR STEEL GRATING DETAILS, SEE SHEET 3 IN THIS SERIES.
9. ALL SLOPE RATIOS ARE EXPRESSED AS UNITS OF VERTICAL DISPLACEMENT TO UNITS OF HORIZONTAL DISPLACEMENT (V:H).
10. TIE ASSEMBLIES, CONSISTING OF ANCHOR RODS, TIE PLATES, RESTRAINT ANGLES, RESTRAINT RODS AND ALL NUTS AND WASHERS SHALL CONFORM WITH AASHTO M270 GR36, OR GR50 AND SHALL BE HOT DIPPED GALVANIZED IN ACCORDANCE WITH AASHTO M 111 AFTER FABRICATION.

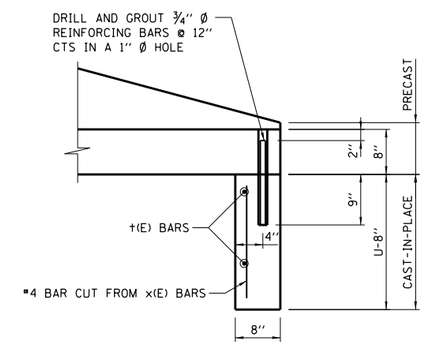

PRECAST CONNECTION DETAIL

SHEET 4 OF 4

Illinois Tollway

HEADWALL TYPE III
18"-24"-30"-36"-42"-48"-54"-60"
FOR 1:3, 1:4, 1:6, AND 1:10 SLOPES

STANDARD B6-07

Paul Kovacs
APPROVED ..... DATE 5-1-2009
CHIEF ENGINEERING OFFICER

HEADWALL TYPE III ALTERNATE PRECAST CONCRETE DETAILS

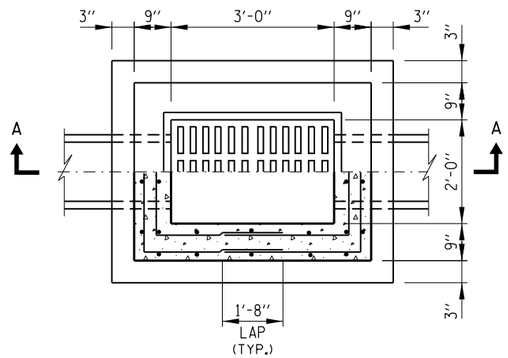

HALF PLAN

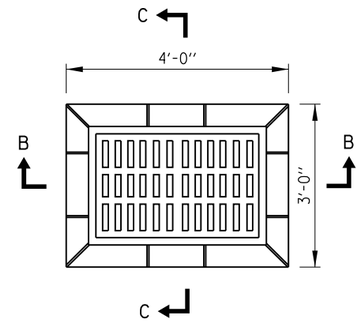

PLAN

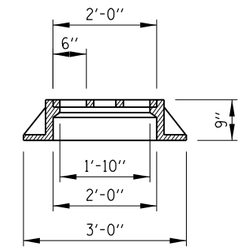

SECTION C-C

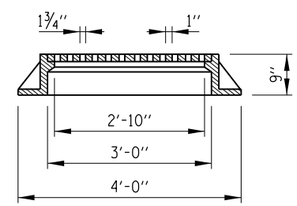

SECTION B-B

FRAME AND GRATE DETAIL

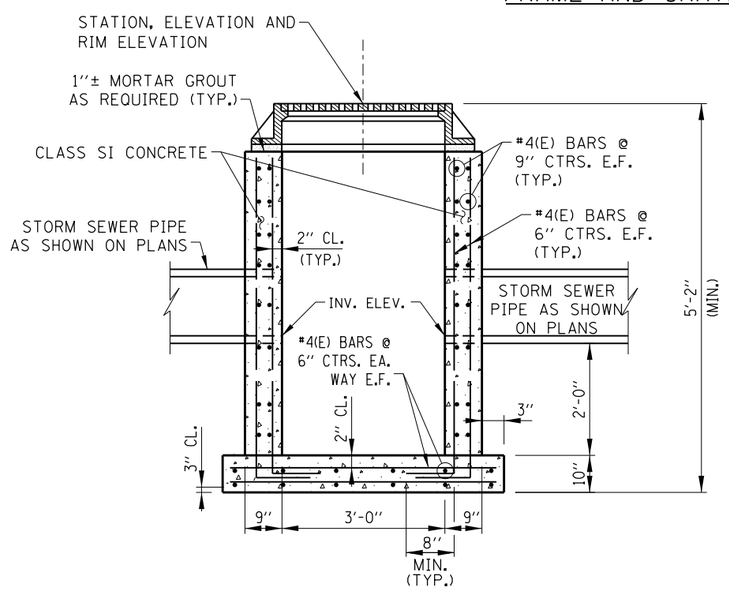

SECTION A-A

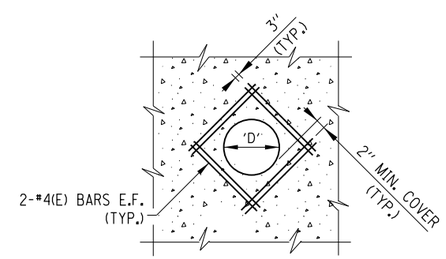

TYPICAL REINFORCEMENT
AROUND STORM SEWER PIPE

CATCH BASIN TYPE B

NOTES:

1. FOR MATERIALS AND CONSTRUCTION REQUIREMENTS OF THE CATCH BASIN, REFER TO THE STANDARD SPECIFICATIONS.
2. FRAME AND GRATE FOR CATCH BASIN TYPE B SHALL BE NEENAH FOUNDRY COMPANY TYPE R-3455C, EAST JORDAN IRON WORKS V5360-1 OR APPROVED EQUAL.
3. REINFORCEMENT BARS DESIGNATED (E) SHALL BE EPOXY COATED.

DATE	REVISIONS
02-07-12	REVISED REINFORCEMENT BARS
03-31-14	REVISED SLOPE DRAIN ALSO FRAME AND GRATE CASTINGS
3-11-2015	SLOPE DRAIN CHANGE TO BASE SHEET
3-01-2020	REVISED TYPICAL REINFORCEMENT AROUND PIPE

Illinois Tollway

CATCH BASIN, TYPE B

STANDARD B7-04

Paul Kovacs
APPROVED ..... DATE 2-7-2012
CHIEF ENGINEERING OFFICER

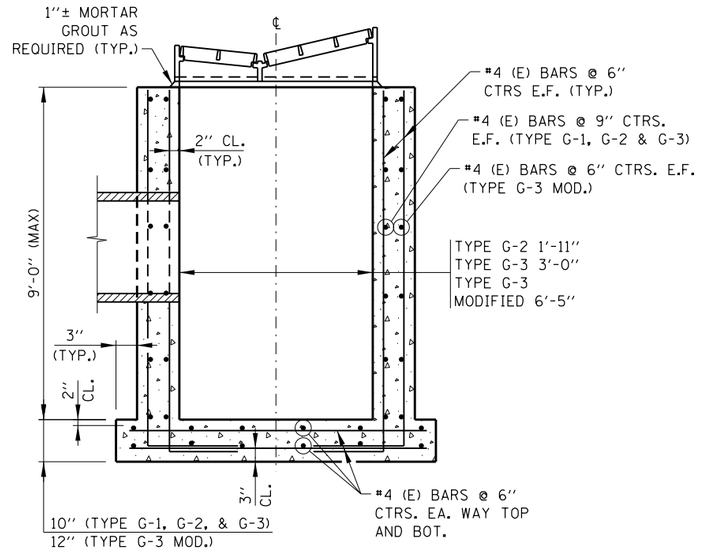

SECTION A-A

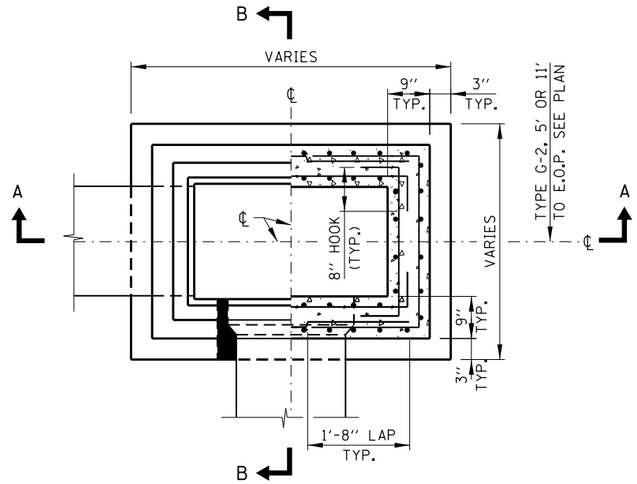

HALF PLAN

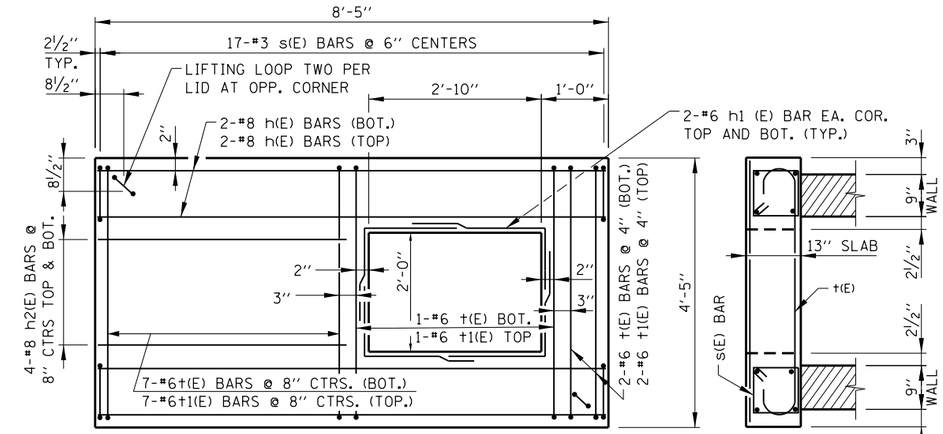

REINFORCED CONCRETE LID
TYPE G-3 FRAME AND GRATE
CATCH BASIN,TYPE G-3, MODIFIED

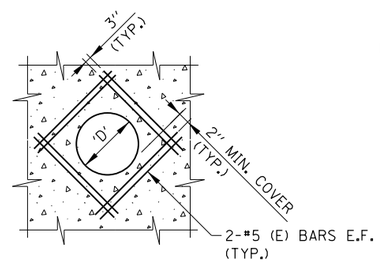

TYPICAL REINFORCEMENT
AROUND STORM SEWER PIPE

LIFTING LOOP TO BE ½''Ø × 270 KSI STRANDS TO BE BURNED AFTER PRECAST CONCRETE LID IS SET IN PLACE.

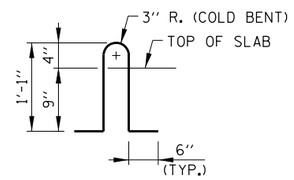

LIFTING LOOP
DETAIL

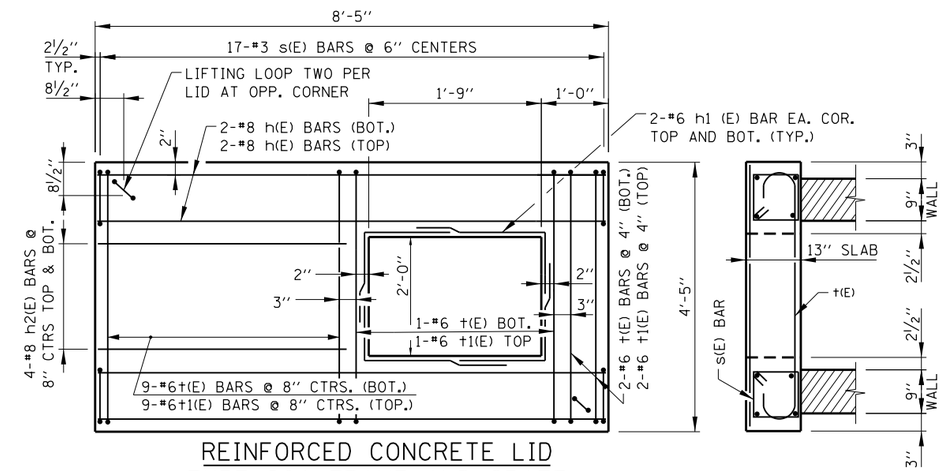

REINFORCED CONCRETE LID
TYPE 20A FRAME AND GRATE
CATCH BASIN,TYPE G-3, MODIFIED

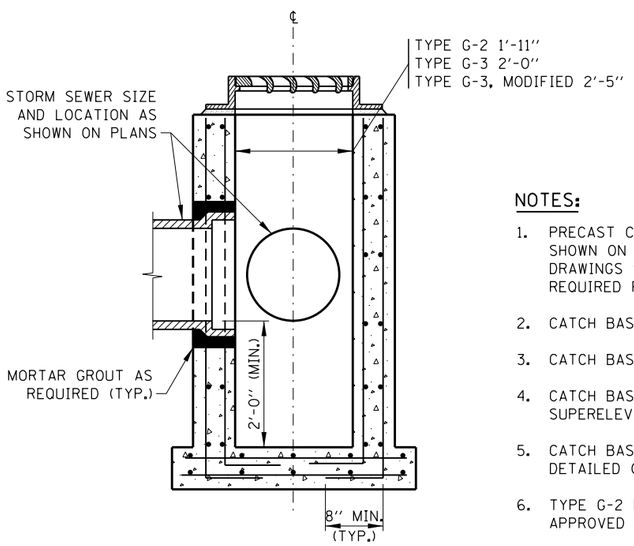

SECTION B-B

CATCH BASIN TYPE ''G'' SERIES

NOTE:

POSITION OF OPENING VARIES FROM 3'-2'' TO 5'-4'' MEASURED FROM BACK OF GUTTER LINE.

NOTES:

1. PRECAST CONCRETE UNITS WILL BE ACCEPTABLE PROVIDED THEY MEET ALL THE REQUIREMENTS AS SHOWN ON THIS DRAWING. BASE EXTENSION OF 3'' NOT REQUIRED FOR PRECAST UNITS. FABRICATION DRAWINGS SHOWING PIPE OPENINGS, REINFORCEMENT AND OTHER PERTINENT DIMENSIONS WILL BE REQUIRED FOR EACH UNIT, FOR APPROVAL BY THE ENGINEER PRIOR TO FABRICATION.
2. CATCH BASIN, TYPE G-2 SHALL BE USED ALONG RAMPS WHERE GUTTER TYPE G-2 IS PROVIDED.
3. CATCH BASIN, TYPE G-3 SHALL BE USED WHERE GUTTER TYPE G-3 IS PROVIDED.
4. CATCH BASIN, TYPE G-3 MODIFIED SHALL BE USED IN PAVEMENT SECTIONS AND ON THE LOW SIDE OF SUPERELEVATED PAVEMENT.
5. CATCH BASIN, TYPE G-3 MODIFIED SHALL BE PROVIDED WITH A REINFORCED CONCRETE SLAB TOP AS DETAILED ON THIS DRAWING.
6. TYPE G-2 FRAME AND GRATE SHALL BE NEENAH R-3508-A2, EAST JORDAN IRON WORKS 7300 OR APPROVED EQUAL.
7. TYPE G-3 FRAME AND GRATE SHALL BE NEENAH INLET FOR ROLL TYPE CURB R-3501-U OR EAST JORDAN IRON WORKS 7545 OR APPROVED EQUAL.
8. TYPE G-3, MODIFIED FRAME AND GRATE SHALL BE NEENAH INLET FOR ROLL TYPE CURB SPECIAL R-3501-U1, EAST JORDAN IRON WORKS 7546 OR APPROVED EQUAL.
9. TYPE G-2, MODIFIED FRAME AND GRATE FOR ROLL TYPE CURB R-3508-B2 OR APPROVED EQUAL.
10. MORTAR OR SEALER SHALL BE USED WHEN A PRECAST REINFORCED CONCRETE LID IS USED.
11. REINFORCEMENT BARS DESIGNATED (E) SHALL BE EPOXY COATED.
12. E.O.P. = EDGE OF PAVEMENT.
13. ALL CONCRETE SHALL BE CLASS SI CONCRETE.
14. FRAME AND GRATE RIM ELEVATION AND OFFSET MEASURED AT THE EDGE OF SHOULDER.

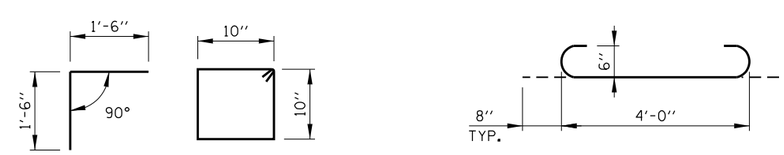

BAR h1(E) BAR s(E) BAR t(E)

SHEET 1 OF 4

Paul Kovacs
APPROVED ..... DATE 6-1-2009
CHIEF ENGINEERING OFFICER

DATE	REVISIONS
3-31-2014	ADDED FRAME AND GRATE CASTINGS
3-11-2015	REVISED NOTES AND ADDED CATCH BASIN TYPE G-4 AND TYPE G-5
3-01-2019	NOTED MAXIMUM HEIGHT, AND PROVIDED RIM ELEVATION AND OFFSET LOCATION FOR CATCH BASINS TYPE G-2, G-3, AND G-3 MODIFIED
3-01-2020	ADDED TYPE 20A FRAME AND GRATE OPTION FOR CATCH BASIN, TYPE G-3, MODIFIED

Illinois Tollway

CATCH BASINS TYPE G AND TYPE G-3 MODIFIED, FRAMES AND GRATES

STANDARD B8-07

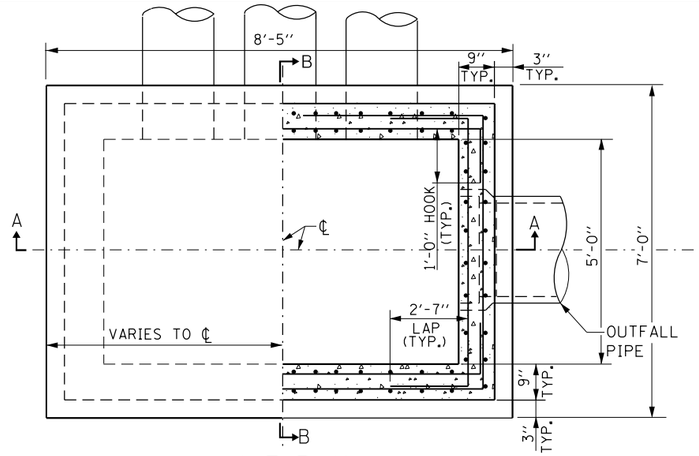

HALF PLAN (24"-36" I.D. OUTFALL PIPE)

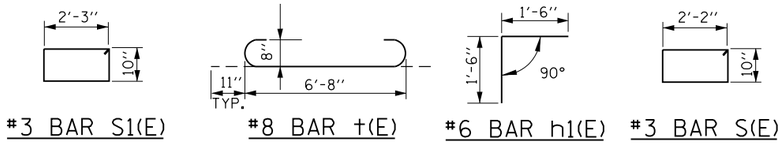

#3 BAR S1(E) #8 BAR †(E) #6 BAR h1(E) #3 BAR S(E)

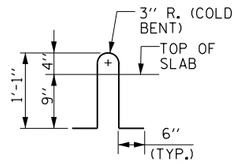

LIFTING LOOP DETAIL

LIFTING LOOP TO BE ½"Ø×270Ksi STRANDS TO BE BURNED AFTER PRECAST CONCRETE LID IS SET IN PLACE.

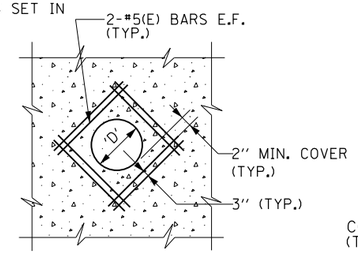

TYPICAL REINFORCEMENT AROUND STORM SEWER PIPE

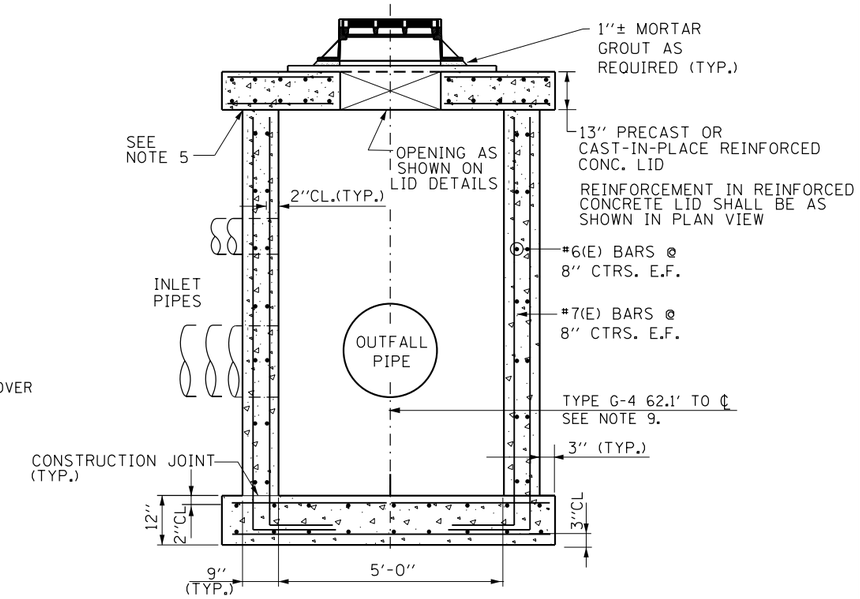

SECTION B-B

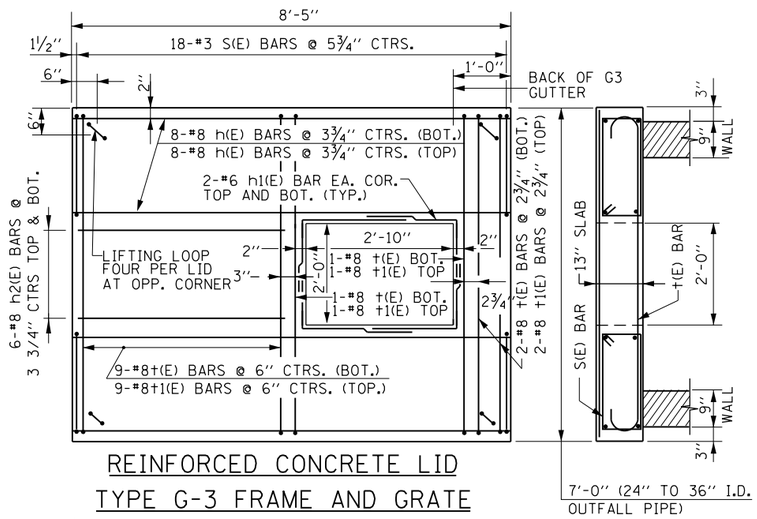

REINFORCED CONCRETE LID TYPE G-3 FRAME AND GRATE

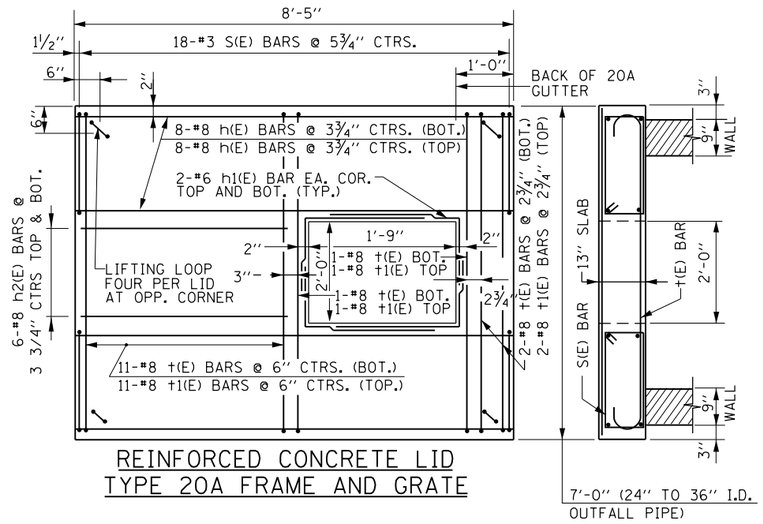

REINFORCED CONCRETE LID TYPE 20A FRAME AND GRATE

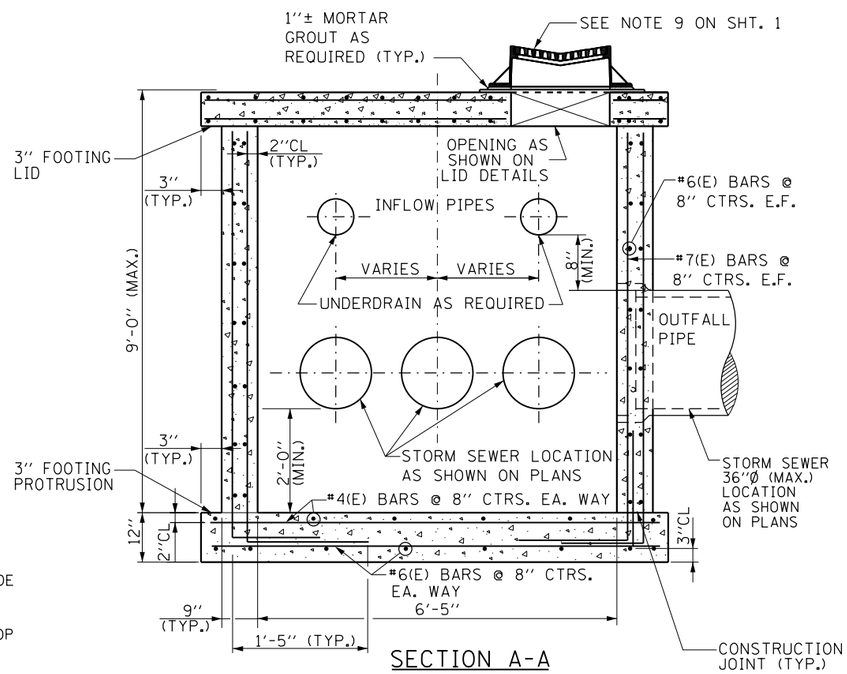

SECTION A-A

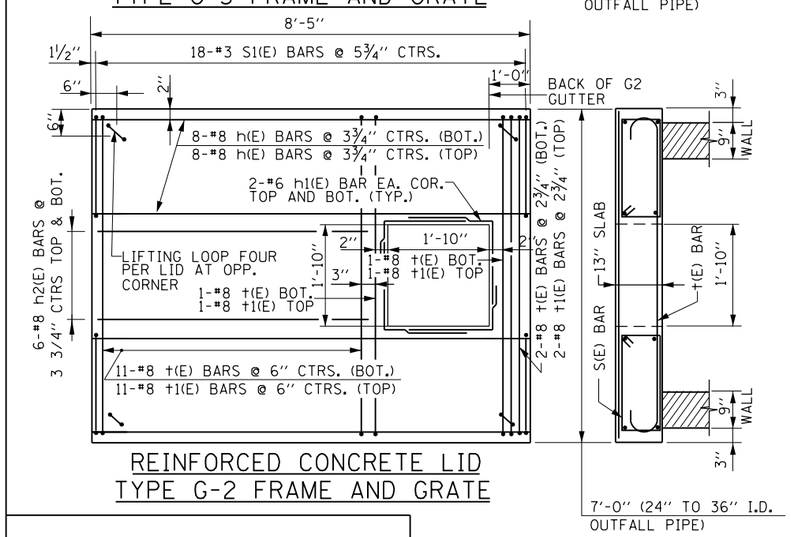

REINFORCED CONCRETE LID TYPE G-2 FRAME AND GRATE

CATCH BASIN TYPE G-4

NOTES:

1. SEE SHEET 1 OF THIS SERIES FOR ADDITIONAL NOTES.
2. CATCH BASINS TYPE G-4 SHALL BE USED IN TANGENT SECTIONS AND ON THE LOW SIDE OF SUPERELEVATED PAVEMENT.
3. CATCH BASINS TYPE G-4 SHALL BE PROVIDED WITH A REINFORCED CONCRETE SLAB TOP AS DETAILED ON THIS DRAWING.
4. CATCH BASINS TYPE G-4 SHALL BE USED WHEN GUTTER, TYPE G-3 IS PROVIDED.
5. MORTAR OR SEALER SHALL BE USED WHEN A PRECAST REINFORCED CONCRETE LID IS USED.
6. FRAME AND GRATE RIM ELEVATION AND OFFSET MEASURED AT THE EDGE OF SHOULDER.
7. 36"Ø MAX. OUTFALL PIPE FOR TYPE G-4 CATCH BASIN.
8. ALL CONCRETE SHALL BE CLASS SI CONCRETE.
9. DISTANCE FROM ℄ OUTFALL PIPE TO ℄ ROADWAY TO BE VERIFIED BY ENGINEER.

Paul Kovacs
APPROVED ..... DATE 6-1-2009
CHIEF ENGINEERING OFFICER

SHEET 2 OF 4

Illinois Tollway

CATCH BASINS TYPE G AND TYPE G-3 MODIFIED, FRAMES AND GRATES

STANDARD B8-07

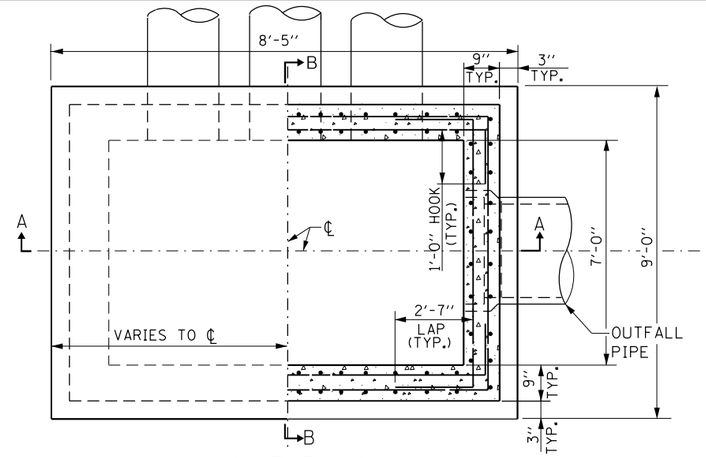

HALF PLAN (42"-60" I.D. OUTFALL PIPE)

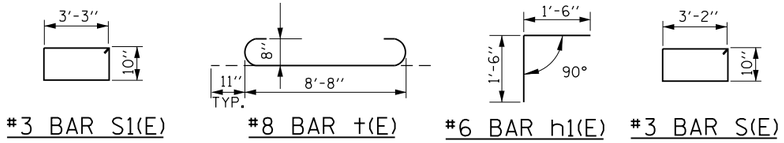

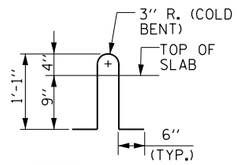

LIFTING LOOP DETAIL

LIFTING LOOP TO BE ½"Ø×270Ksi STRANDS TO BE BURNED AFTER PRECAST CONCRETE LID IS SET IN PLACE.

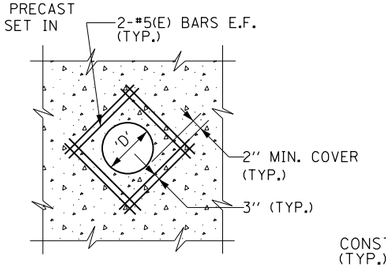

TYPICAL REINFORCEMENT AROUND STORM SEWER PIPE

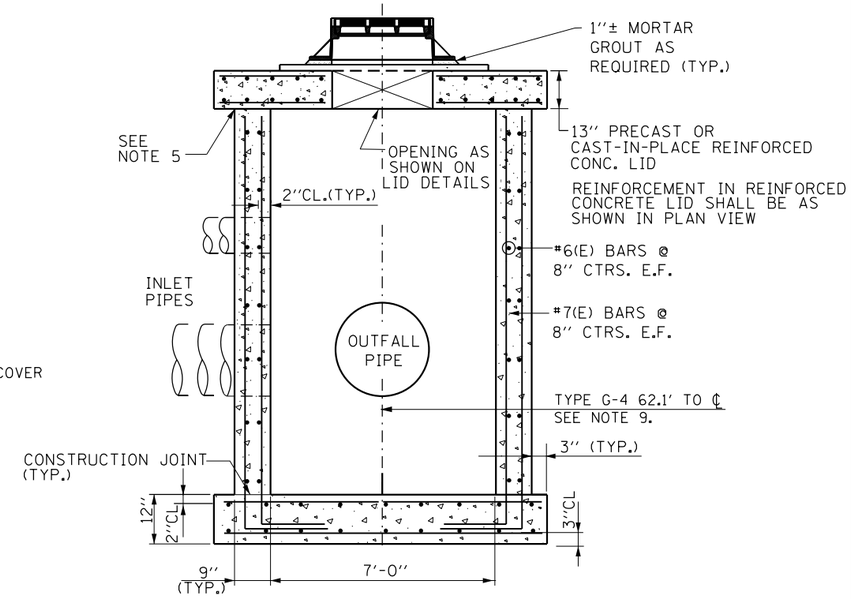

SECTION B-B

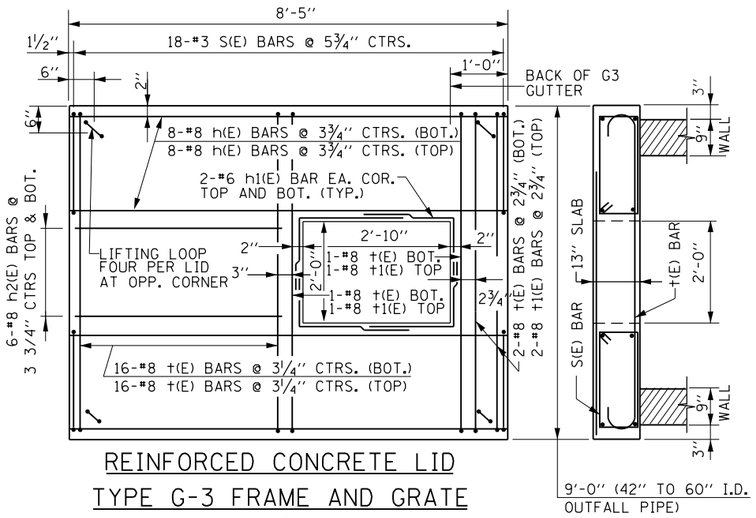

REINFORCED CONCRETE LID TYPE G-3 FRAME AND GRATE

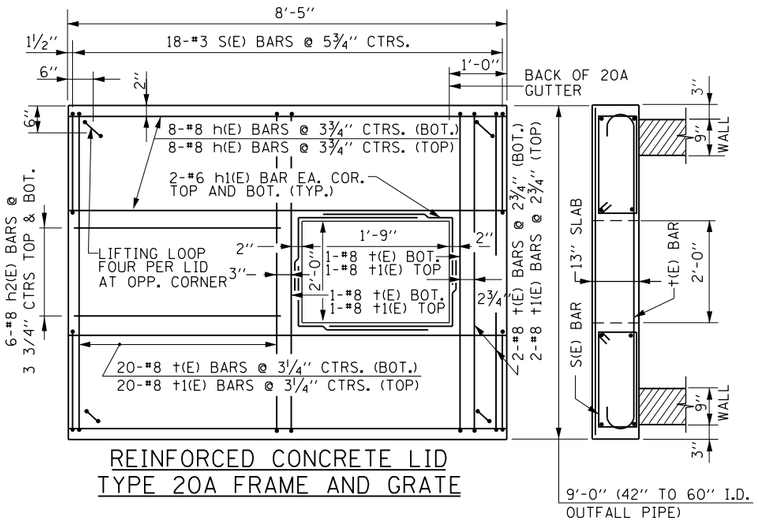

REINFORCED CONCRETE LID TYPE 20A FRAME AND GRATE

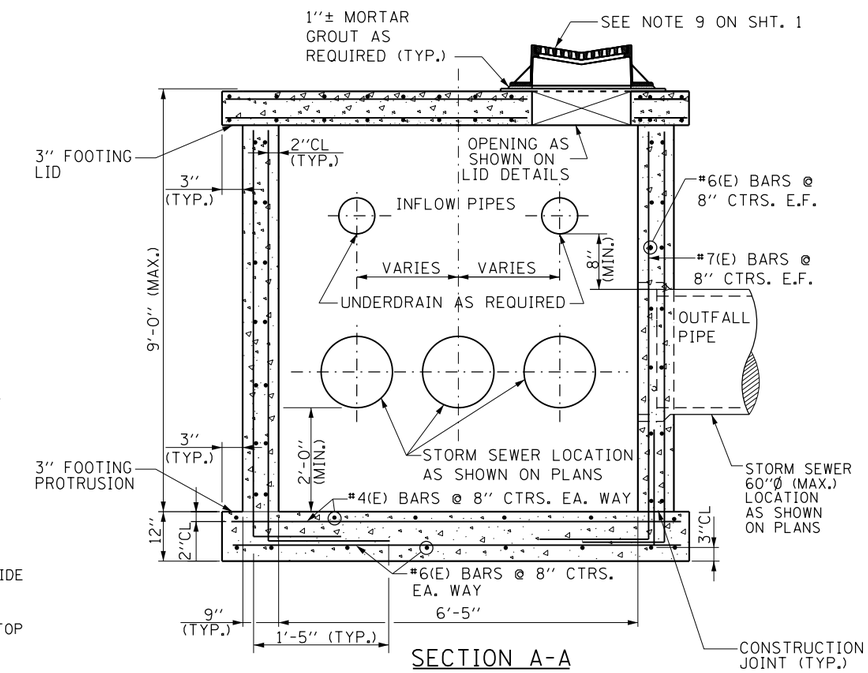

SECTION A-A

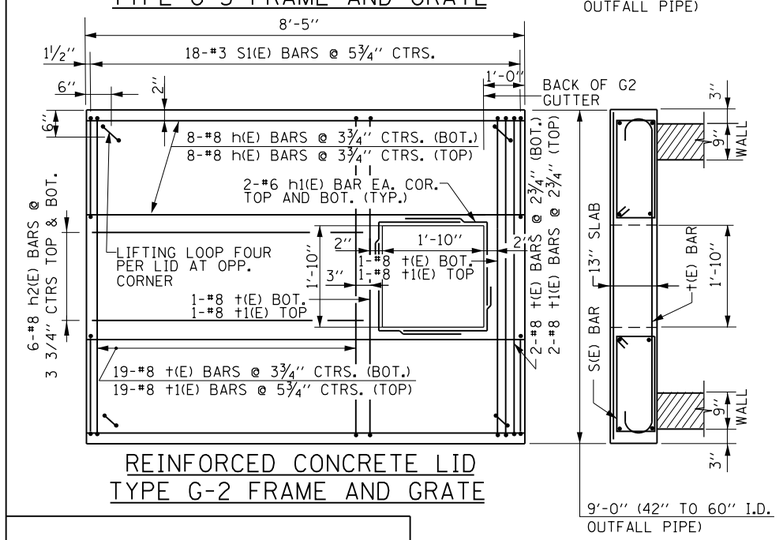

REINFORCED CONCRETE LID TYPE G-2 FRAME AND GRATE

CATCH BASIN TYPE G-5

NOTES:

1. SEE SHEET 1 OF THIS SERIES FOR ADDITIONAL NOTES.
2. CATCH BASINS TYPE G-5 SHALL BE USED IN TANGENT SECTIONS AND ON THE LOW SIDE OF SUPERELEVATED PAVEMENT.
3. CATCH BASINS TYPE G-5 SHALL BE PROVIDED WITH A REINFORCED CONCRETE SLAB TOP AS DETAILED ON THIS DRAWING.
4. CATCH BASINS TYPE G-5 SHALL BE USED WHEN GUTTER, TYPE G-3 IS PROVIDED.
5. MORTAR OR SEALER SHALL BE USED WHEN A PRECAST REINFORCED CONCRETE LID IS USED.
6. FRAME AND GRATE RIM ELEVATION AND OFFSET MEASURED AT THE EDGE OF SHOULDER.
7. 60"Ø MAX. OUTFALL PIPE FOR TYPE G-5 CATCH BASIN.
8. ALL CONCRETE SHALL BE CLASS SI CONCRETE.
9. DISTANCE FROM ℄ OUTFALL PIPE TO ℄ ROADWAY TO BE VERIFIED BY ENGINEER.

Paul Kovacs
APPROVED . . . . . DATE 6-1-2009
CHIEF ENGINEERING OFFICER

SHEET 3 OF 4

Illinois Tollway

CATCH BASINS TYPE G AND TYPE G-3 MODIFIED, FRAMES AND GRATES

STANDARD B8-07

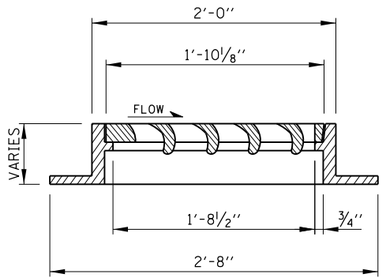

SECTION T-T

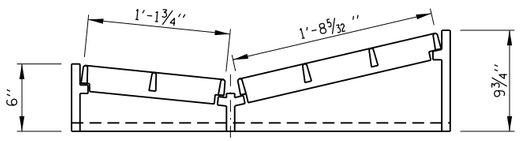

SECTION U-U

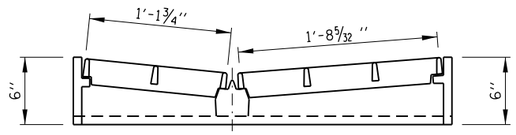

SECTION W-W

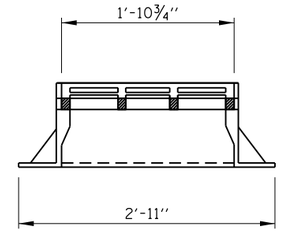

SECTION Y-Y

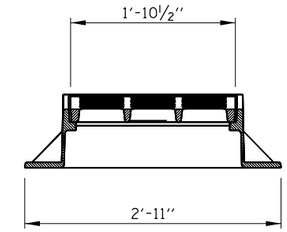

SECTION S-S

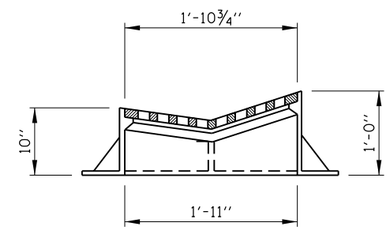

SECTION Z-Z

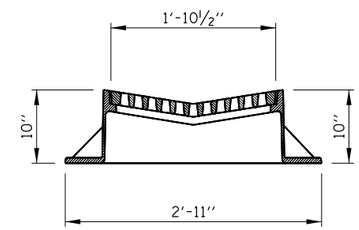

SECTION V-V

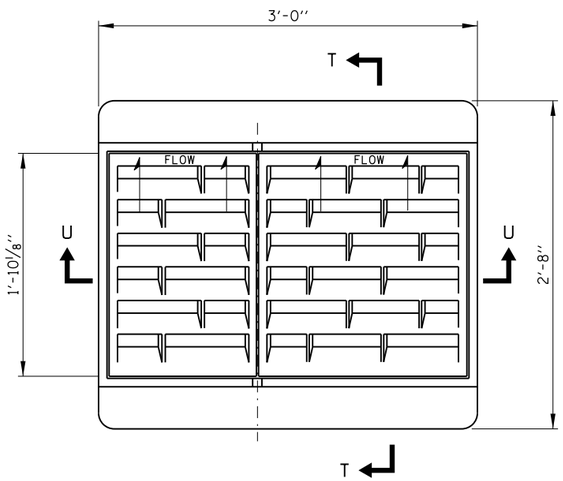

TYPE G-3 FRAME & GRATE

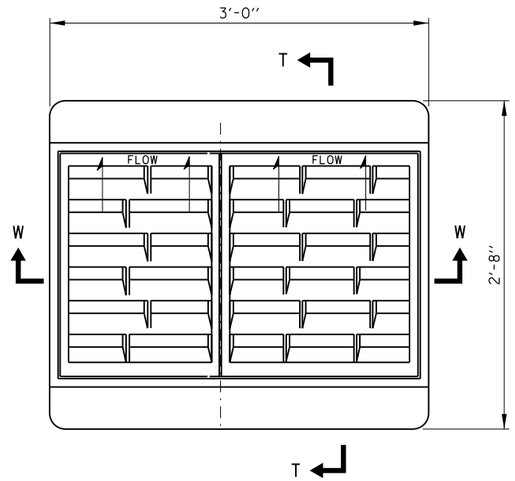

TYPE G-3, MODIFIED
FRAME & GRATE

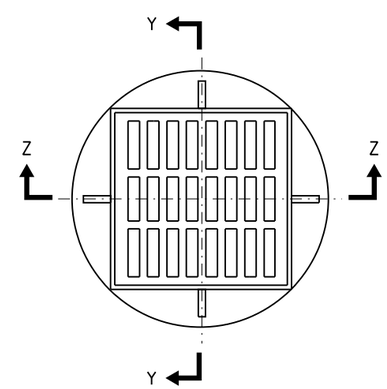

TYPE G-2 FRAME & GRATE

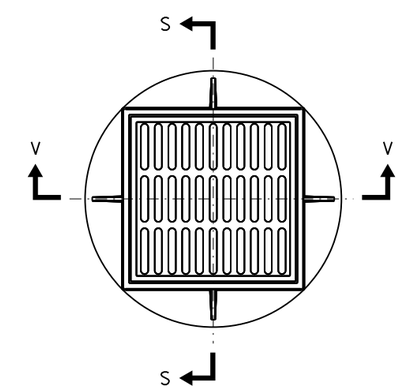

TYPE G-2 MODIFIED
FRAME & GRATE

SHEET 4 OF 4

NOTE:

SEE SHEET 1 OF THIS SERIES FOR NOTES.

Illinois Tollway

CATCH BASINS TYPE G AND TYPE G-3 MODIFIED, FRAMES AND GRATES

STANDARD B8-07

Paul Kovacs
APPROVED ..... DATE 6-1-2009
CHIEF ENGINEERING OFFICER

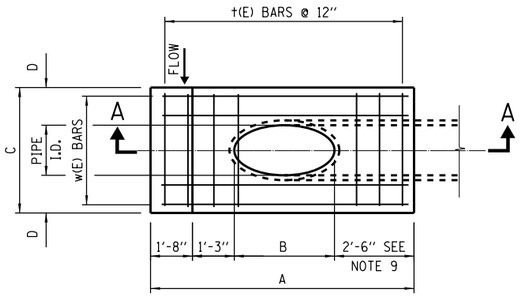

PLAN I

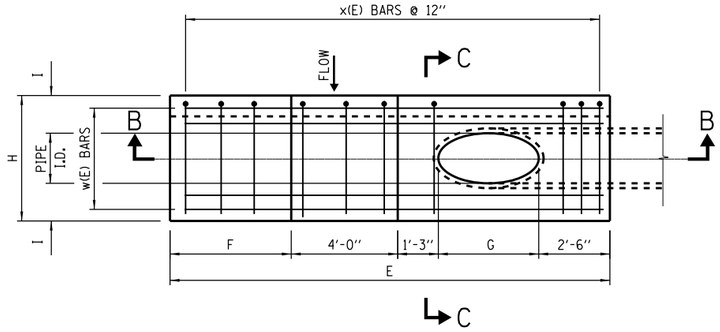

PLAN II

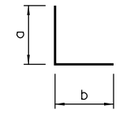

x(E) BARS

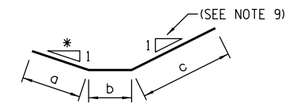

w(E) BARS

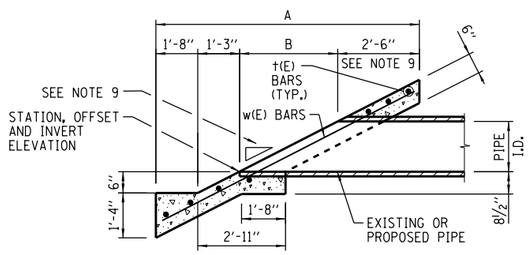

SECTION A-A

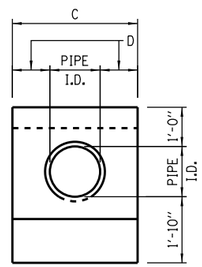

ELEVATION

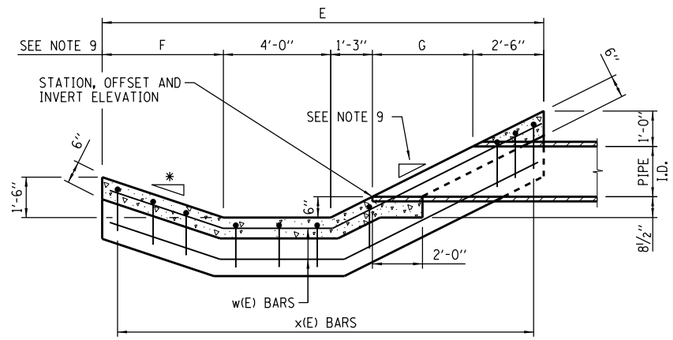

SECTION B-B

* MATCH EXISTING OR PROPOSED SLOPE, SEE NOTE 9

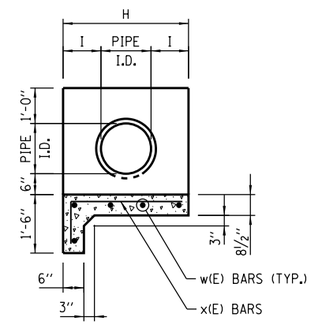

SECTION C-C

NOTES:

1. SLOPED HEADWALL TYPES I AND II SHALL BE CONSTRUCTED FLUSH WITH EXISTING OR PROPOSED SLOPE.
2. CLASS SI CONCRETE SHALL BE USED THROUGHOUT.
3. ALL REINFORCEMENT BARS SHOWN SHALL BE EPOXY COATED (E).
4. BAR BENDING DETAILS ARE DIMENSIONED OUT TO OUT OF BARS.
5. ALL EXPOSED EDGES SHALL HAVE A ¾'' CHAMFER. CHAMFER ON VERTICAL EDGES SHALL BE CONTINUED A MINIMUM OF ONE FOOT BELOW THE FINISHED GROUND LINE.
6. COVER FROM THE FACE OF CONCRETE TO FACE OF REINFORCEMENT BARS SHALL BE 3'' FOR SURFACES FORMED AGAINST EARTH AND 2'' FOR ALL OTHER SURFACES UNLESS OTHERWISE SHOWN.
7. CARE SHALL BE EXERCISED IN REMOVING ANY LENGTH OF EXISTING PIPE SO THE REMAINING PIPE IS UNDAMAGED AND FULLY FUNCTIONING.
8. ALL SLOPES ARE EXPRESSED AS UNITS OF VERTICAL DISPLACEMENT TO UNITS OF HORIZONTAL DISPLACEMENT (V:H).
9. SLOPED HEADWALLS, TYPES I AND II TO BE USED ONLY FOR SLOPES STEEPER THAN 1:3. DIMENSIONS AND QUANTITIES SHOWN ARE BASED ON A 1:2.5 SLOPE (EXISTING AND PROPOSED).
10. I.D. DENOTES INSIDE DIAMETER OF PIPE. O.D. DENOTES OUTSIDE DIAMETER OF PIPE.

TABLES FOR DIMENSIONS, REINFORCEMENT AND QUANTITIES FOR ONE SLOPED HEADWALL TYPE I

SLOPED HEADWALL DIMENSION TABLE - TYPE I				
PIPE I.D.	A	B	C	D
6''	6'-8''	1'-3''	2'-6''	1'-0''
12''	7'-11''	2'-6''	3'-0''	1'-0''
15''	8'-7''	3'-2''	3'-9''	1'-3''
18''	9'-2''	3'-9''	4'-6''	1'-6''

PIPE I.D.	REINFORCMENT BARS		
	MARK(E)	NO. & SIZE	LENGTH
6''	†6	7-#4	2'-2''
	w6	4-#4	6'-8''
12''	†12	7-#4	2'-8''
	w12	4-#4	8'-2''
15''	†15	7-#4	3'-5''
	w15	4-#4	8'-11''
18''	†18	7-#4	4'-2''
	w18	4-#4	9'-6''

DESIGN NO.	INSIDE DIA. OF PIPE	CONC. 1 HDWL. (CU. YD.)	REINF. BARS. 1 HDWL. (POUND)
F-6-2	6''	0.5	29
F-12-2	12''	0.6	35
F-15-2	15''	0.8	40
F-18-2	18''	1.0	45

SLOPED HEADWALL TYPE I

TABLES FOR DIMENSIONS, REINFORCEMENT AND QUANTITIES FOR ONE SLOPED HEADWALL TYPE II

SLOPED HEADWALL DIMENSION TABLE - TYPE II					
PIPE I.D.	E	F	G	H	I
12''	14'-0''	3'-9''	2'-6''	3'-0''	1'-0''
15''	14'-8''	3'-9''	3'-2''	3'-9''	1'-3''
18''	15'-3''	3'-9''	3'-9''	4'-6''	1'-6''

PIPE I.D.	REINFORCMENT BARS					
	MARK(E)	NO. & SIZE	LENGTH	a	b	c
12''	x12	10-#4	3'-6''	2'-6''	1'-0''	---
	w12	5-#4	14'-4''	3'-10''	4'-0''	6'-6''
15''	x15	10-#4	4'-3''	3'-3''	1'-0''	---
	w15	5-#4	15'-1''	3'-10''	4'-0''	7'-3''
18''	x18	10-#4	5'-0''	4'-0''	1'-0''	---
	w18	5-#4	15'-8''	3'-10''	4'-0''	7'-10''

DESIGN NO.	INSIDE DIA. OF PIPE	CONC. 1 HDWL. (CU. YD.)	REINF. BARS. 1 HDWL. (POUND)
E-12-2	12''	1.2	75
E-15-2	15''	1.6	82
E-18-2	18''	1.7	89

SLOPED HEADWALL TYPE II

Illinois Tollway

DATE	REVISIONS
2-7-2012	REVISED REINFORCEMENT BARS, TABLES
3-31-2014	REVISED CONRETE QUANTITIES- REINFORCEMENT STEEL
3-11-2015	REVISED REINFORCEMENT BARS, TABLES
3-31-2017	REVISED REINFORCEMENT BARS, TABLES

SLOPED HEADWALLS TYPE I AND TYPE II

STANDARD B9-04

Paul Kovacs
APPROVED CHIEF ENGINEER
DATE 2-7-2012

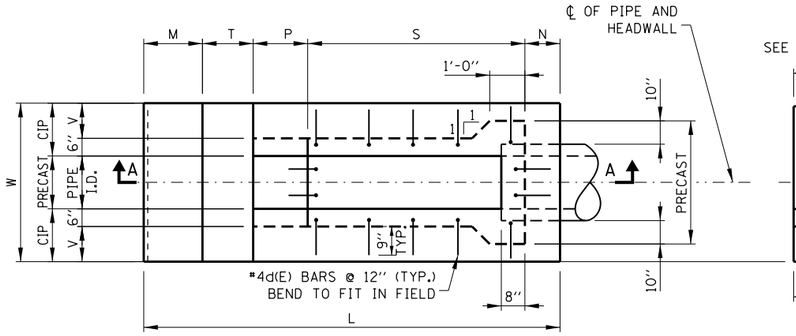

PLAN - SLOPED HEADWALL

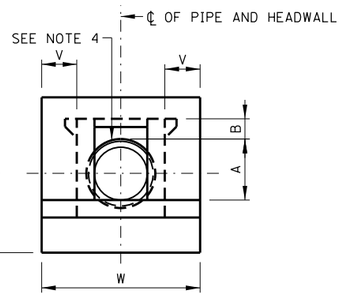

ELEVATION

NOTES:

EACH #4d(E) BAR SHALL BE PLACED SUCH THAT IT WILL PROJECT 9" INTO THE CAST IN PLACE (CIP) CONCRETE AND IT SHALL BE 3" BELOW THE TOP SURFACE. HOOKS IN THE PRECAST SECTION SHALL BE TIPPED TO CLEAR ALL CONCRETE SURFACES A MIN. OF 2".

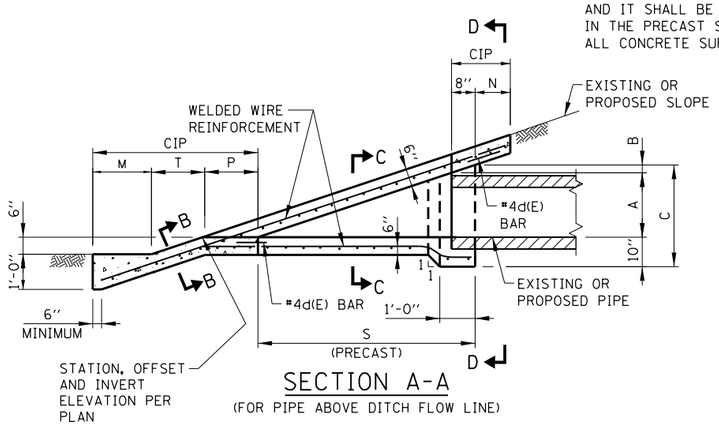

SECTION A-A

(FOR PIPE ABOVE DITCH FLOW LINE)

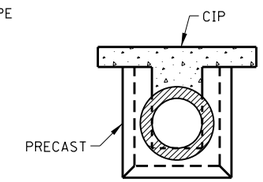

SECTION D-D

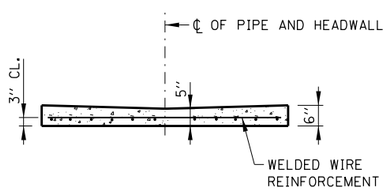

SECTION B-B

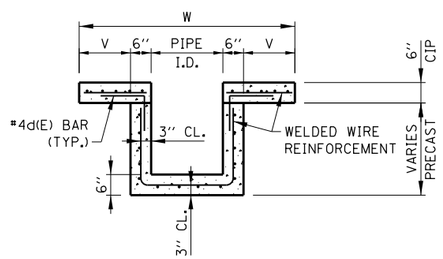

SECTION C-C

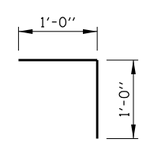

BAR #4d(E)

DIMENSIONS AND QUANTITIES FOR ONE SLOPED HEADWALL TYPE III

	PIPE I.D.	DIMENSIONS											PRE CAST CONC. CU. YD.	CAST-IN-PLACE CU. YD.	WELDED WIRE REINFORCEMENT SQ. YD.	REINFORCEMENT BARS				
		A	B	C	N	M	T	P	S	L	V	W				MARK(E)	SIZE	NO.	LENGTH	LB.
1 TO 3 SLOPE	6"	9"	2¾"	1'-9¾"	1'-0"	1'-8"	1'-6"	1'-6¾"	2'-11¼"	8'-8"	1'-0"	3'-6"	0.15	0.72	3.28	d6	#4	12	2'-0"	16
	12"	1'-3½"	2¾"	2'-4¼"	1'-0"	1'-8"	1'-6"	1'-6¾"	4'-6¾"	10'-3½"	1'-0"	4'-0"	0.34	0.92	4.50	d12	#4	14	2'-0"	19
	15"	1'-6½"	2¾"	2'-7¼"	1'-0"	1'-8"	1'-6"	1'-6¾"	5'-3¾"	11'-½"	1'-0"	4'-3"	0.45	1.01	5.88	d15	#4	16	2'-0"	21
	18"	1'-10"	2¾"	2'-10¾"	1'-0"	1'-8"	1'-6"	1'-6¾"	6'-2¼"	11'-11"	1'-0"	4'-6"	0.61	1.13	6.44	d18	#4	18	2'-0"	24
	21"	2'-1"	2¾"	3'-1¾"	1'-0"	1'-9"	1'-6"	1'-6¾"	6'-11¼"	12'-9"	1'-3"	5'-3"	0.76	1.39	8.34	d21	#4	22	2'-0"	29
	24"	2'-4½"	2¾"	3'-5¼"	1'-0"	2'-0"	1'-6"	1'-6¾"	7'-9¾"	13'-10½"	1'-6"	6'-0"	0.95	1.72	9.85	d24	#4	24	2'-0"	32
	27"	2'-7½"	2¾"	3'-8¼"	1'-1½"	2'-3"	1'-6"	1'-6¾"	8'-6¾"	15'-0"	1'-9"	6'-9"	1.14	2.07	13.54	d27	#4	24	2'-0"	32
	30"	2'-11"	2¾"	3'-11¾"	1'-3"	2'-6"	1'-6"	1'-6¾"	9'-5¼"	16'-3"	2'-0"	7'-6"	1.38	2.46	16.40	d30	#4	26	2'-0"	35

	PIPE I.D.	DIMENSIONS											PRE CAST CONC. CU. YD.	CAST-IN-PLACE CU. YD.	WELDED WIRE REINFORCEMENT SQ. YD.	REINFORCEMENT BARS				
		A	B	C	N	M	T	P	S	L	V	W				MARK(E)	SIZE	NO.	LENGTH	LB.
1 TO 4 SLOPE	6"	9"	2"	1'-9"	1'-0"	1'-8"	2'-0"	2'-1"	3'-8"	10'-5"	1'-0"	3'-6"	0.17	0.83	4.07	d6	#4	12	2'-0"	16
	12"	1'-3½"	2"	2'-3½"	1'-0"	1'-8"	2'-0"	2'-1"	5'-10"	12'-7"	1'-0"	4'-0"	0.41	1.07	5.50	d12	#4	16	2'-0"	21
	15"	1'-6½"	2"	2'-6½"	1'-0"	1'-8"	2'-0"	2'-1"	6'-10"	13'-7"	1'-0"	4'-3"	0.55	1.18	6.63	d15	#4	18	2'-0"	24
	18"	1'-10"	2"	2'-10"	1'-0"	1'-8"	2'-0"	2'-1"	8'-0"	14'-9"	1'-0"	4'-6"	0.74	1.32	8.60	d18	#4	22	2'-0"	29
	21"	2'-1"	2"	3'-1"	1'-0"	1'-9"	2'-0"	2'-1"	9'-0"	15'-10"	1'-3"	5'-3"	0.93	1.63	11.03	d21	#4	24	2'-0"	32
	24"	2'-4½"	2"	3'-4½"	1'-0"	2'-0"	2'-0"	2'-1"	10'-2"	17'-3"	1'-6"	6'-0"	1.18	2.00	13.88	d24	#4	28	2'-0"	37
	27"	2'-7½"	2"	3'-7½"	1'-1½"	2'-3"	2'-0"	2'-1"	11'-2"	18'-7½"	1'-9"	6'-9"	1.42	2.41	14.83	d27	#4	30	2'-0"	40
	30"	2'-11"	2"	3'-11"	1'-3"	2'-6"	2'-0"	2'-1"	12'-4"	20'-2"	2'-0"	7'-6"	1.71	2.87	20.49	d30	#4	32	2'-0"	43

	PIPE I.D.	DIMENSIONS											PRE CAST CONC. CU. YD.	CAST-IN-PLACE CU. YD.	WELDED WIRE REINFORCEMENT SQ. YD.	REINFORCEMENT BARS				
		A	B	C	N	M	T	P	S	L	V	W				MARK(E)	SIZE	NO.	LENGTH	LB.
1 TO 6 SLOPE	6"	9"	1½"	1'-8½"	1'-0"	1'-8"	3'-0"	3'-0"	5'-3"	13'-11"	1'-0"	3'-6"	0.23	1.07	5.29	d6	#4	16	2'-0"	21
	12"	1'-3½"	1½"	2'-3"	1'-0"	1'-8"	3'-0"	3'-0"	8'-6"	17'-2"	1'-0"	4'-0"	0.57	1.38	8.62	d12	#4	22	2'-0"	29
	15"	1'-6½"	1½"	2'-6"	1'-0"	1'-8"	3'-0"	3'-0"	10'-0"	18'-8"	1'-0"	4'-3"	0.77	1.53	10.35	d15	#4	26	2'-0"	35
	18"	1'-10"	1½"	2'-9½"	1'-0"	1'-8"	3'-0"	3'-0"	11'-9"	20'-5"	1'-0"	4'-6"	1.04	1.70	12.47	d18	#4	28	2'-0"	37
	21"	2'-1"	1½"	3'-0½"	1'-0"	1'-9"	3'-0"	3'-0"	13'-3"	22'-0"	1'-3"	5'-3"	1.31	2.11	15.77	d21	#4	34	2'-0"	45
	24"	2'-4½"	1½"	3'-4"	1'-0"	2'-0"	3'-0"	3'-0"	15'-0"	24'-0"	1'-6"	6'-0"	1.66	2.59	17.62	d24	#4	38	2'-0"	51
	27"	2'-7½"	1½"	3'-7"	1'-1½"	2'-3"	3'-0"	3'-0"	16'-6"	25'-10½"	1'-9"	6'-9"	1.99	3.11	24.10	d27	#4	40	2'-0"	53
	30"	2'-11"	1½"	3'-10½"	1'-3"	2'-6"	3'-0"	3'-0"	18'-3"	28'-0"	2'-0"	7'-6"	2.41	3.70	29.13	d30	#4	44	2'-0"	59

NOTES:

1. THE CAST IN PLACE (CIP) SLOPED HEADWALL SHALL BE CONSTRUCTED FLUSH WITH EXISTING OR PROPOSED SLOPE.
2. CLASS SI CONCRETE SHALL BE USED THROUGHOUT.
3. WELDED WIRE REINFORCEMENT SHALL BE EPOXY COATED 6x6-W4xW4, 58 LBS. PER 100 SQ.FT.
4. ALL REINFORCEMENT BARS SHOWN SHALL BE EPOXY COATED (E).
5. BAR BENDING DETAILS ARE DIMENSIONED OUT TO OUT OF BARS.
6. COVER FROM FACE OF CONCRETE TO FACE OF REINFORCEMENT BAR SHALL BE 3" FOR SURFACES FORMED AGAINST EARTH AND 2" FOR ALL OTHER SURFACES UNLESS OTHERWISE SHOWN.
7. PRECAST UNIT USE IS OPTIONAL. THE ENTIRE STRUCTURE MAY BE CAST IN PLACE.
8. AFTER THE PRECAST SLOPED HEADWALL HAS BEEN PLACED, THE SPACE BETWEEN THE HEADWALL AND PIPE SHALL BE COMPLETELY FILLED WITH AN APPROVED NON-SHRINK GROUT WITH A MINIMUM COMPRESSIVE STRENGTH IN ACCORDANCE WITH THE STANDARD SPECIFICATIONS.
9. THE SLOPED HEADWALL DETAILS SHOWN ON THIS DRAWING ARE FOR USE ONLY WITH PIPES HAVING DIAMETER OR SPAN OF 30" OR LESS.
10. ALL SLOPES ARE EXPRESSED AS UNITS OF VERTICAL DISPLACEMENT TO UNITS OF HORIZONTAL DISPLACEMENT (V:H).
11. I.D. DENOTES INSIDE DIAMETER OF PIPE. O.D. DENOTES OUTSIDE DIAMETER OF PIPE.
12. REBAR REINFORCEMENT MAY BE USED AS AN OPTION TO WELDED WIRE REINFORCEMENT, DRAWINGS SHALL BE SUBMITTED FOR APPROVAL BY THE ENGINEER.

SHEET 1 OF 3

Paul Kovacs
APPROVED . . . . . DATE 2-7-2012
CHIEF ENGINEERING OFFICER

DATE	REVISIONS
3-31-2014	REVISED QUANTITIES
3-11-2015	REVISED TABLES AND SECTIONS
3-31-2016	CHANGED TERMINOLOGY TO WELDED WIRE REINFORCEMENT
3-31-2017	REVISED TABLE (L)
3-01-2019	ADDED DOUBLE SLOPED HEADWALL TYPE III
3-01-2020	REVISED NOTES

Illinois Tollway

SLOPED HEADWALLS TYPE III DETAILS

STANDARD B10-11

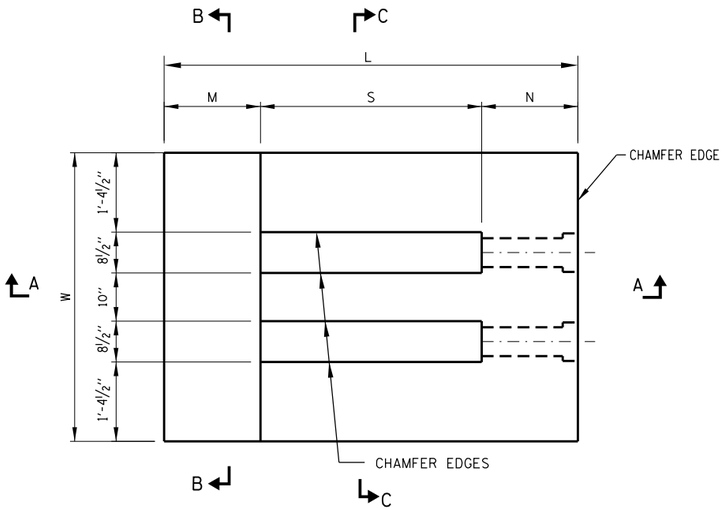

PLAN - DOUBLE SLOPED HEADWALL

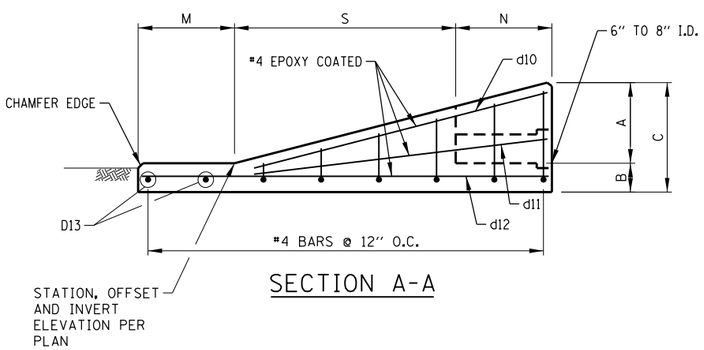

SECTION A-A

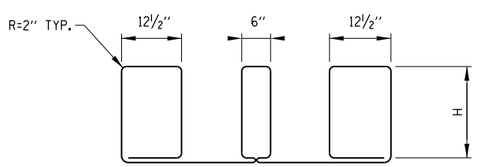

d1 THROUGH d9 BAR BENT

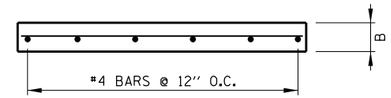

SECTION B-B

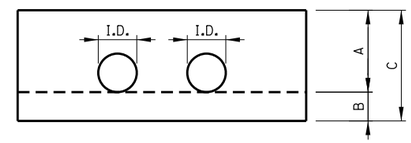

ELEVATION

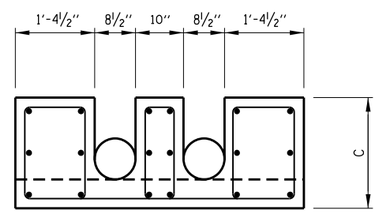

SECTION C-C

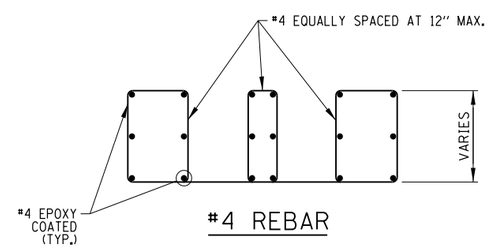

#4 REBAR

STIRRUP HEIGHT TABLE FOR DOUBLE SLOPED HEADWALL TYPE III

1 TO 3 SLOPE AND C=1'-11"	
	STIRRUP HEIGHT, H
d1 E	17'-6"
d2 E	14'-4 ¾"
d3 E	11'-3 ¾"
d4 E	8'-2 ¾"
d5 E	5'-1 ½"

1 TO 4 SLOPE AND C=1'-11"	
	STIRRUP HEIGHT, H
d1 E	17'-7"
d2 E	15'-¾"
d3 E	12'-6 ¾"
d4 E	10'-½"
d5 E	7'-6"
d6 E	5'-0"

1 TO 6 SLOPE AND C=1'-11"	
	STIRRUP HEIGHT, H
d1 E	17'-8 ¼"
d2 E	15'-10 ½"
d3 E	14'-¼"
d4 E	12'-2 ¼"
d5 E	10'-4 ¼"
d6 E	8'-6"
d7 E	6'-8 ¼"
d8 E	4'-10"

1 TO 3 SLOPE AND C=2'-1"	
	STIRRUP HEIGHT, H
d1 E	19'-6"
d2 E	16'-4 ¾"
d3 E	13'-3 ¾"
d4 E	10'-2 ¾"
d5 E	7'-1 ½"
d6 E	4'-½"

1 TO 4 SLOPE AND C=2'-1"	
	STIRRUP HEIGHT, H
d1 E	19'-7"
d2 E	17'-¾"
d3 E	14'-6 ¾"
d4 E	12'-½"
d5 E	9'-6"
d6 E	7'-0"
d7 E	4'-5 ¾"

1 TO 6 SLOPE AND C=2'-1"	
	STIRRUP HEIGHT, H
d1 E	19'-8 ¼"
d2 E	17'-10 ½"
d3 E	16'-¼"
d4 E	14'-2 ¼"
d5 E	12'-4 ¼"
d6 E	10'-6"
d7 E	8'-8 ¼"
d8 E	6'-10"
d9 E	5'-0"

NOTES:

1. THE DOUBLE SLOPED HEADWALL SHALL BE CONSTRUCTED FLUSH WITH EXISTING OR PROPOSED SLOPE.
2. CLASS SI CONCRETE SHALL BE USED THROUGHOUT.
3. ALL REINFORCEMENT BARS SHOWN SHALL BE EPOXY COATED (E).
4. BAR BENDING DETAILS ARE DIMENSIONED OUT TO OUT OF BARS.
5. COVER FROM FACE OF CONCRETE TO FACE OF REINFORCEMENT BAR SHALL BE 3" FOR SURFACES FORMED AGAINST EARTH AND 2" FOR ALL OTHER SURFACES UNLESS OTHERWISE SHOWN.
6. PRECAST UNIT USE IS OPTIONAL. THE ENTIRE STRUCTURE MAY BE CAST IN PLACE.
7. AFTER THE PRECAST SLOPED HEADWALL HAS BEEN PLACED, THE SPACE BETWEEN THE HEADWALL AND PIPE SHALL BE COMPLETELY FILLED WITH AN APPROVED NON-SHRINK GROUT WITH A MINIMUM COMPRESSIVE STRENGTH IN ACCORDANCE WITH THE STANDARD SPECIFICATIONS.
8. THE DOUBLE SLOPED HEADWALL DETAILS SHOWN ON THIS DRAWING ARE FOR USE ONLY WITH PIPES HAVING DIAMETER OR SPAN OF 8" OR LESS.
9. ALL SLOPES ARE EXPRESSED AS UNITS OF VERTICAL DISPLACEMENT TO UNITS OF HORIZONTAL DISPLACEMENT (V:H).
10. I.D. DENOTES INSIDE DIAMETER OF PIPE.
11. WELDED WIRE REINFORCEMENT MAY BE USED AS AN OPTION TO REBAR REINFORCEMENT. DRAWINGS SHALL BE SUBMITTED FOR APPROVAL BY THE ENGINEER.

APPROVED Paul Kovacs DATE 2-7-2012
CHIEF ENGINEERING OFFICER

Illinois Tollway

SLOPED HEADWALLS TYPE III DETAILS

STANDARD B10-11

	PIPE I.D.	DIMENSIONS								PRECAST CONCRETE CU YD	MARK	SIZE	NO	LENGTH	LB
		A	B	C	N	S	M	L	W						
1 TO 3 SLOPE	(2) - 6'' PIPE	1'-5''	6''	1'-11''	1'-8''	3'-10''	1'-8''	7'-2''	5'-0''	1.29	d1 E	#4	1	17'-4 3/4''	12
											d2 E	#4	1	15'-10 1/4''	11
											d3 E	#4	1	14'-3 1/2''	10
											d4 E	#4	1	12'-9 1/4''	9
											d5 E	#4	1	11'-2 1/2''	7
											d10 E	#4	6	4'-8''	19
											d11 E	#4	6	3'-10 3/4''	16
											d12 E	#4	6	6'-10''	27
											d13 E	#4	2	4'-8''	6
	(2) - 8'' PIPE OR (1) - 6'' PIPE & (1) - 8'' PIPE	1'-5''	8''	2'-1''	1'-8''	3'-10''	1'-8''	7'-2''	5'-0''	1.51	d1 E	#4	1	18'-4 3/4''	12
											d2 E	#4	1	16'-10 1/4''	11
											d3 E	#4	1	15'-3 1/2''	10
											d4 E	#4	1	13'-9 1/4''	9
											d5 E	#4	1	12'-2 1/2''	8
											d6 E	#4	1	10'-8''	7
											d10 E	#4	6	5'-4''	21
											d11 E	#4	6	4'-6 1/2''	18
											d12 E	#4	6	6'-10''	27
											d13 E	#4	2	4'-8''	6

	PIPE I.D.	DIMENSIONS								PRECAST CONCRETE CU YD	MARK	SIZE	NO	LENGTH	LB
		A	B	C	N	S	M	L	W						
1 TO 6 SLOPE	(2) - 6'' PIPE	1'-5''	6''	1'-11''	1'-8''	7'-7''	1'-8''	10'-11''	5'-0''	2.00	d1 E	#4	1	17'-6''	12
											d2 E	#4	1	16'-7''	11
											d3 E	#4	1	15'-8''	10
											d4 E	#4	1	14'-9''	10
											d5 E	#4	1	13'-10''	9
											d6 E	#4	1	12'-10 3/4''	9
											d7 E	#4	1	12'-0''	8
											d8 E	#4	1	11'-3/4''	7
											d10 E	#4	6	7'-9 3/4''	31
											d11 E	#4	6	6'-7 3/4''	27
											d12 E	#4	6	10'-7 1/4''	42
											d13 E	#4	2	4'-8''	6
	(2) - 8'' PIPE OR (1) - 6'' PIPE & (1) - 8'' PIPE	1'-5''	8''	2'-1''	1'-8''	7'-7''	1'-8''	10'-11''	5'-0''	2.33	d1 E	#4	1	18'-6''	12
											d2 E	#4	1	17'-7''	12
											d3 E	#4	1	16'-8''	11
											d4 E	#4	1	15'-9''	11
											d5 E	#4	1	14'-10''	10
											d6 E	#4	1	13'-10 3/4''	9
											d7 E	#4	1	13'-0''	9
											d8 E	#4	1	12'-3/4''	8
											d9 E	#4	1	11'-1 3/4''	7
											d10 E	#4	6	8'-11''	36
											d11 E	#4	6	7'-9''	31
											d12 E	#4	6	10'-7 1/4''	42
											d13 E	#4	2	4'-8''	6

	PIPE I.D.	DIMENSIONS								PRECAST CONCRETE CU YD	MARK	SIZE	NO	LENGTH	LB
		A	B	C	N	S	M	L	W						
1 TO 4 SLOPE	(2) - 6'' PIPE	1'-5''	6''	1'-11''	1'-8''	5'-1''	1'-8''	8'-5''	5'-0''	1.53	d1 E	#4	1	17'-5 1/4''	12
											d2 E	#4	1	16'-2 1/4''	11
											d3 E	#4	1	14'-11''	10
											d4 E	#4	1	13'-8''	9
											d5 E	#4	1	12'-4 3/4''	8
											d6 E	#4	1	11'-1 3/4''	7
											d10 E	#4	6	5'-8 1/2''	23
											d11 E	#4	6	4'-9 3/4''	19
											d12 E	#4	6	8'-1 1/4''	32
											d13 E	#4	2	4'-8''	6
	(2) - 8'' PIPE OR (1) - 6'' PIPE & (1) - 8'' PIPE	1'-5''	8''	2'-1''	1'-8''	5'-1''	1'-8''	8'-5''	5'-0''	1.79	d1 E	#4	1	18'-5 1/4''	12
											d2 E	#4	1	17'-2 1/4''	11
											d3 E	#4	1	15'-11''	11
											d4 E	#4	1	14'-8''	10
											d5 E	#4	1	13'-4 3/4''	9
											d6 E	#4	1	12'-1 3/4''	8
											d7 E	#4	1	10'-10 3/4''	7
											d10 E	#4	6	6'-6 1/4''	26
											d11 E	#4	6	5'-7 1/4''	22
											d12 E	#4	6	8'-1 1/4''	32
											d13 E	#4	2	4'-8''	6

DIMENSIONS AND QUANTITIES FOR DOUBLE SLOPED HEADWALL TYPE III

Paul Kovacs
APPROVED ..... DATE 2-7-2012
CHIEF ENGINEERING OFFICER

SHEET 3 OF 3

Illinois Tollway

SLOPED HEADWALLS
TYPE III DETAILS

STANDARD B10-11

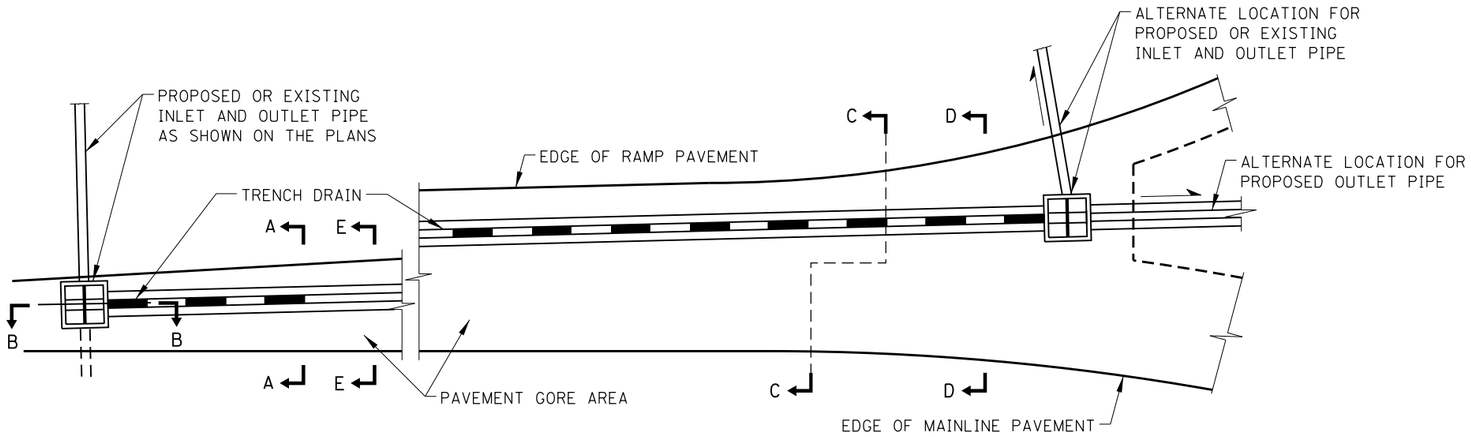

PLAN

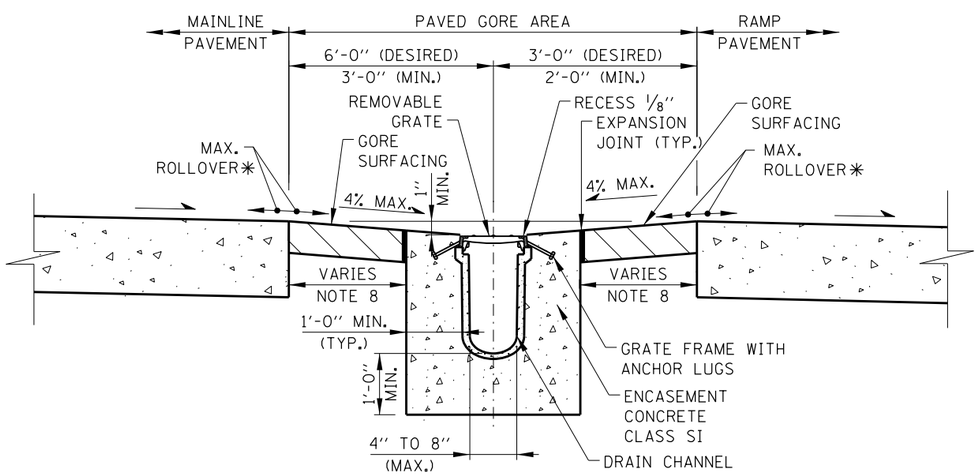

SECTION A-A
TRENCH DRAIN INSTALLATION

NOTES:

1. OUTLET PIPES AND PREFORMED CHANNEL INVERTS SHALL BE SLOPED AT 0.6% OR STEEPER TOWARD OUTLET REGARDLESS OF THE SURFACE SLOPE.
2. TRENCH DRAIN MAY BE STUBBED DIRECTLY INTO DRAINAGE STRUCTURES OR OUTLET PIPES MAY BE USED TO CONNECT TRENCH DRAIN TO DRAINAGE STRUCTURES.
3. TRENCH EXCAVATION MUST ALLOW FOR A MINIMUM OF 12 INCHES OF CONCRETE TO BE PLACED UNDER AND ALONGSIDE THE TRENCH DRAIN CHANNEL SYSTEM.
4. THE FINISHED LEVEL OF CONCRETE MUST BE APPROXIMATELY 1/8" ABOVE THE TOP OF THE DRAIN CHANNEL.
5. TRENCH DRAINS SHALL BE IN ACCORDANCE WITH THE MANUFACTURERS DETAILS AND SPECIFICATIONS.
6. PROVIDE 1" EXPANSION JOINT WITH PREFORMED JOINT FILLER BETWEEN PAVED SHOULDER AND TRENCH DRAIN ENCASEMENT.
7. ALL SLOPES ARE EXPRESSED AS UNITS OF VERTICAL DISPLACEMENT TO UNITS OF HORIZONTAL PLACEMENT (V:H).
8. WHEN THE CONCRETE ENCASEMENT FOR TRENCH DRAIN IS WITHIN 6' OF THE PAVEMENT, REPLACE THE GORE SURFACING WITH CLASS SI CONCRETE 9" DEPTH; PAY ITEM: PORTLAND CEMENT CONCRETE SHOULDERS (JOINTED) 9".

✳ MAXIMIMUM ROLLOVER AND ✳✳ MAXIMUM SLOPE FROM EDGE OF SHOULDER VARIES FROM THE PHYSICAL NOSE TO THE GORE NOSE ACCORDING TO THE FOLLOWING:

FOR EXIT RAMPS: ✳ 5% MAX. ROLLOVER AND
✳✳ 9% MAX. SLOPE FROM EDGE OF SHOULDER

FOR ENTRANCE RAMPS: ✳ 7% MAX. ROLLOVER AND
✳✳ 10% MAX. SLOPE FROM EDGE OF SHOULDER

SHEET 1 OF 2

DATE	REVISIONS
2-01-2013	REVISED MAINLINE SHOULDER GRADE
3-31-2014	REVISED NOTES
3-11-2015	REVISED ROLLOVER, ADDED CATCH BASIN, TYPE B
3-31-2016	REVISED PIPING BEND
3-01-2018	UPDATED MAX. ROLLOVER REQUIREMENTS. REVISED SECTION E-E HATCHING.

Illinois Tollway

TRENCH DRAIN DETAIL

STANDARD B12-07

Paul Kovacs
APPROVED CHIEF ENGINEERING OFFICER DATE 1-1-2011

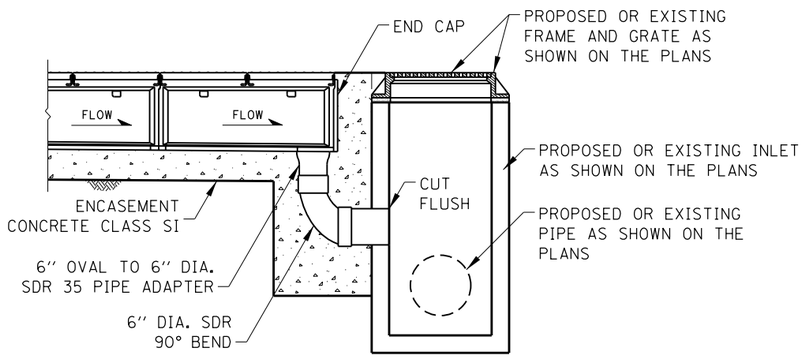

SECTION B-B
PIPE OUTLET TO DRAINAGE STRUCTURE

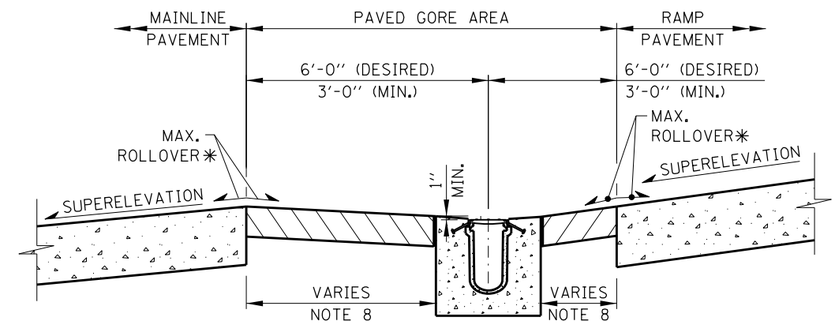

SECTION E-E
RAMP ON OUTSIDE OF
SUPERELEVATED MAINLINE SECTION

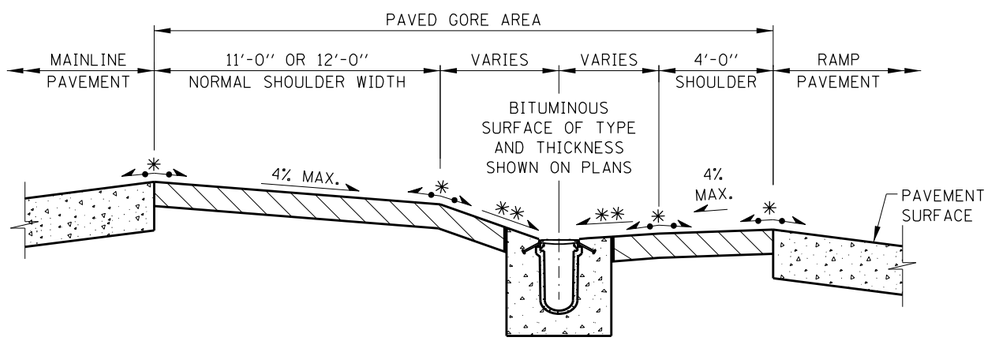

SECTION D-D

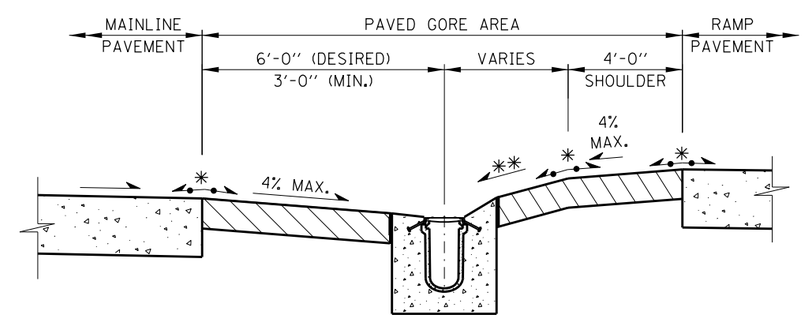

SECTION C-C

NOTE:
SEE SHEET 1 OF THIS SERIES FOR NOTES.

Paul Kovacs
APPROVED CHIEF ENGINEERING OFFICER
DATE 1-1-2011

SHEET 2 OF 2

Illinois Tollway

TRENCH DRAIN DETAIL

STANDARD B12-07

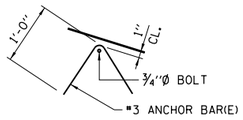

ANCHOR BARS

CONTRACTOR SHALL PROVIDE 2-#3 ANCHOR BARS(E) PER SIDEWALL BOLT.

DETAIL B

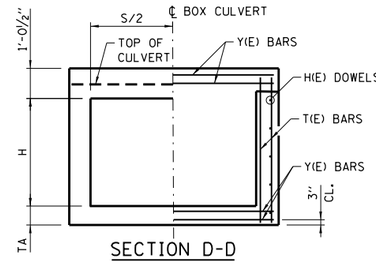

SECTION D-D

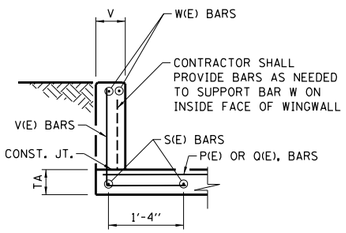

SECTION A-A

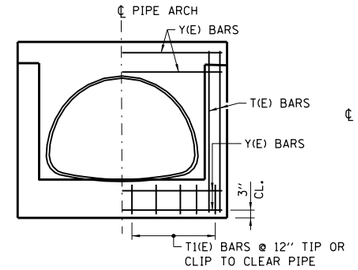

SECTION B-B

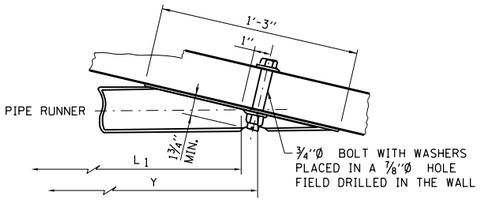

SECTION AT WING

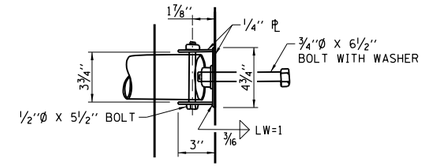

PLAN AT HEADWALL

NOTE:

A 3/4"Ø X 9 1/2" BOLT WITH ADDITIONAL PL WASHER PLACED IN A 7/8"Ø HOLE DRILLED THROUGH THE HEADWALL OR A 3/4"Ø X 8" THREADED ROD EPOXY GROUTED IN A 7/8"Ø HOLE WITH A MINIMUM EMBEDMENT OF 6 5/8" MAY BE USED IN LIEU OF CAST-IN-PLACE BOLT SHOWN.

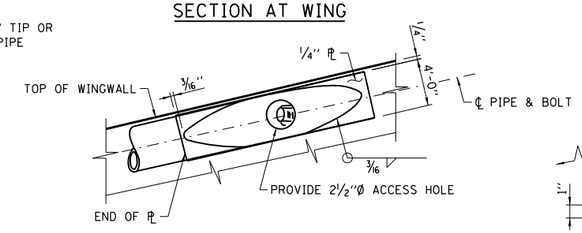

ELEVATION AT WING

NOTE:

PIPE O.D. IS THE PIPE RUNNER OUTSIDE DIAMETER.

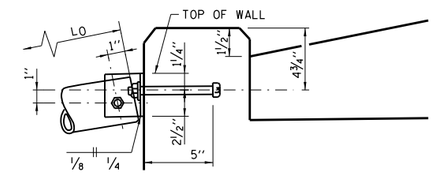

ELEVATION AT HEADWALL

NOTE:

O(E) BARS ARE TO BE FIELD CUT PER CUTTING DIAGRAM. PLACE BARS WITH DIMENSIONS C_4-C_5 BEGINNING AT HEADWALL AND BARS WITH DIMENSIONS C_3-C_6 BEGINNING AT THE TOEWALL END.

S = DESIGN SPAN
H = DESIGN HEIGHT

NOTE:

J & H, DOWEL BARS NOT REQUIRED WITH EXISTING BOX CULVERTS PROVIDING THE REINFORCING FROM THE EXISTING BOX IS EXTENDED INTO THE NEW CONCRETE A MINIMUM OF 1'-3".

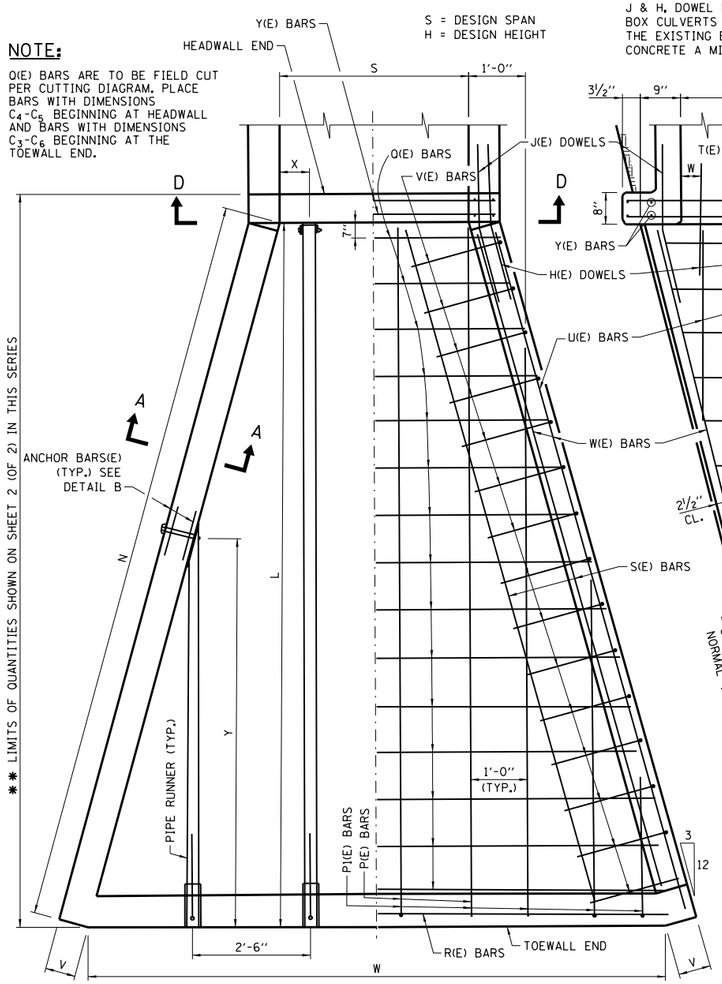

HALF PLAN SHOWING DIMENSIONS

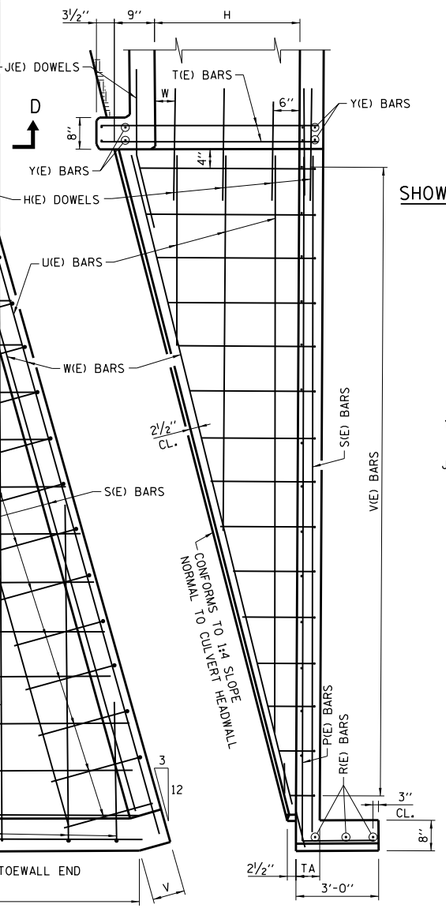

HALF PLAN SHOWING REINFORCEMENT BARS

ELEVATION PARALLEL TO BARREL

BOX CULVERT DETAILS

** DOWEL BARS EXTENDING INTO THE CONCRETE BOX CULVERT ARE INCLUDED IN THE QUANTITIES

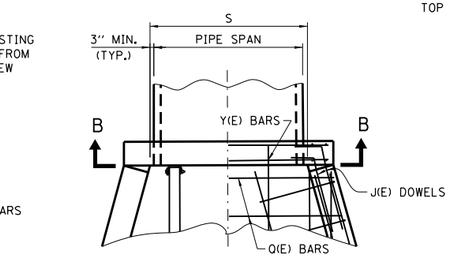

HALF PLAN SHOWING DIMENSIONS

HALF PLAN SHOWING REINFORCEMENT BARS

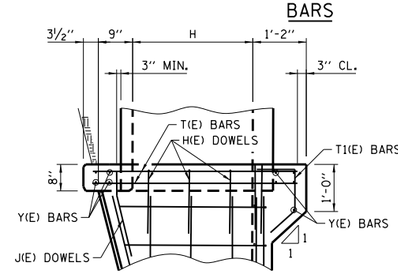

ELEVATION

PIPE ARCH DETAILS

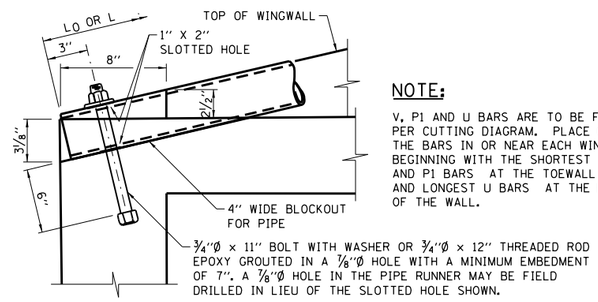

SECTION THRU TOEWALL

NOTE:

V, P1 AND U BARS ARE TO BE FIELD CUT PER CUTTING DIAGRAM. PLACE ONE-HALF THE BARS IN OR NEAR EACH WINGWALL BEGINNING WITH THE SHORTEST V BARS AND P1 BARS AT THE TOEWALL END AND LONGEST U BARS AT THE BOTTOM OF THE WALL.

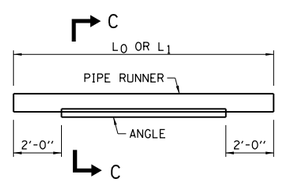

DETAIL A

PIPE RUNNER DETAILS

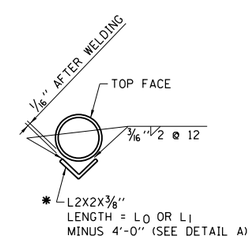

SECTION C-C

*NOTE:

WHERE L_0 OR L_1 EXCEEDS THE FOLLOWING LENGTH, THE PIPE RUNNER SHALL BE STRENGTHENED OVER THE MIDSPAN AS SHOWN.

PIPE	LENGTH
3"Ø, SCH. 40	12'-8"

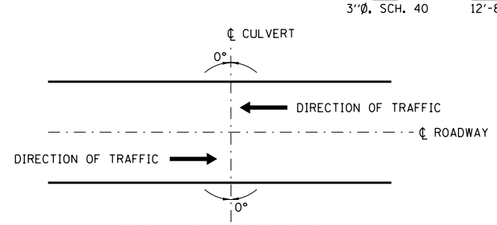

CULVERT SKEW ORIENTATION

GENERAL NOTES:

1. ALL CONCRETE SHALL BE CLASS SI.
2. ALL EXPOSED CONCRETE EDGES SHALL HAVE A 3/4" x 45° CHAMFER. CHAMFER ON VERTICAL EDGES SHALL BE CONTINUED A MINIMUM OF ONE FOOT BELOW FINISHED GROUND LEVEL. COVER FROM THE FACE OF CONCRETE TO THE FACE OF REINFORCEMENT BARS SHALL BE 2", UNLESS OTHERWISE SHOWN.
3. CONCRETE QUANTITIES SHOWN ON SHEET 2 (OF 2) IN THIS SERIES ARE FOR REINFORCED CONCRETE BOX CULVERT SECTIONS AND ADDITIONAL CONCRETE REQUIRED IN HEADWALLS FOR PIPE OR ARCH CULVERT SECTIONS SHALL BE ADDED TO THESE QUANTITIES.
4. THIS STANDARD MAY BE USED FOR CULVERTS WITH SKEW OF 0° ± 7.5°. AS SHOWN PER CULVERT SKEW ORIENTATION ON THIS SHEET.
5. DESIGN: SAFETY PIPE RUNNERS ARE DESIGNED FOR A TRANSVERSING LOAD OF 1,800 POUNDS AT YIELD AS RECOMMENDED BY RESEARCH REPORT 280-1, SAFETY TREATMENT OF ROADSIDE CROSS DRAINAGE STRUCTURES, TEXAS TRANSPORTATION INSTITUTE, MARCH 1981.
6. ALL SLOPES ARE EXPRESSED AS UNITS OF VERTICAL DISPLACEMENT TO UNITS OF HORIZONTAL DISPLACEMENT (V:H).
7. FOR EROSION PROTECTION SEE STANDARD B19.
8. ALL REINFORCEMENT BARS SHOWN SHALL BE EPOXY COATED (E).

SHEET 1 OF 2

Illinois Tollway

DATE	REVISIONS
06-01-09	REVISED NOTES
03-01-10	REVISED EROSION PROTECTION AND NOTES
02-07-12	TABLE QUANTITIES REVISED
03-31-14	TABLE QUANTITIES REVISED
3-11-2015	REVISED NOTES

SAFETY END TREATMENT FOR SINGLE CULVERTS
0° SKEW 1:4
SLOPE H ≤ 4'

STANDARD B13-05

Paul Kovacs
APPROVED CHIEF ENGINEER
DATE 6-1-2009

CULVERT SIZE	TABLE OF DIMENSIONS							TOTAL QUANTITIES ONE END			PIPE RUNNERS FOR ONE END - SIZE 3" O.D.			
								CONC.	REINF. BARS	PIPE RUNNER	HEADWALL PIPE		WINGWALL PIPE	
S x H	L	N	V	W	TA	X	Y	CU. YD.	POUND	FT.	NO.	L_0	NO.	L_1
3 x 2	10'-10"	11'-2"	7"	8'-5"	6"	0'-3"	--	3.2	346	22.16	2	11'-1"	0	--
3 x 3	14'-10"	15'-3½"	7"	10'-5"	6"	1'-6"	10'-10"	5.2	489	37.50	1	15'-2"	2	11'-2"
4 x 2	10'-10"	11'-2"	7"	9'-5"	6"	0'-9"	--	3.4	372	22.16	2	11'-1"	0	--
4 x 3	14'-10"	15'-3½"	7"	11'-5"	6"	2'-0"	12'-10"	6.5	521	41.50	1	15'-2"	2	13'-2"
4 x 4	18'-10"	19'-5"	7"	13'-5"	6"	0'-9"	11'-10"	8.1	727	63.00	2	19'-4"	2	12'-2"
5 x 2	10'-10"	11'-2"	7"	10'-5"	6"	1'-3"	5'-10"	3.7	397	34.16	2	11'-1"	2	6'-0"
5 x 3	14'-10"	15'-3½"	7"	12'-5"	6"	1'-3"	9'-10"	5.9	554	50.50	2	15'-2"	2	10'-1"
5 x 4	18'-10"	19'-5"	7"	14'-5"	6"	1'-3"	13'-10"	8.5	765	67.17	2	19'-4"	2	14'-3"
6 x 3	14'-10"	15'-3½"	7"	13'-5"	6"	1'-9"	11'-10"	6.2	583	54.67	2	15'-2"	2	12'-2"
6 x 4	18'-10"	19'-5"	7"	15'-5"	6"	0'-6"	10'-10"	8.9	800	80.33	3	19'-4"	2	11'-2"
7 x 3	14'-10"	15'-3½"	7"	14'-5"	6½"	2'-3"	13'-10"	6.5	614	58.83	2	15'-2"	2	14'-3"
7 x 4	18'-10"	19'-5"	7"	16'-5"	6½"	1'-0"	12'-10"	9.3	835	84.33	3	19'-4"	2	13'-2"
8 x 4	18'-10"	19'-5"	7"	17'-5"	7"	0'-3"	9'-10"	9.7	871	97.50	4	19'-4"	2	10'-1"

PIPE ARCH AND ELLIPTICAL PIPE CULVERTS

FOR PIPE ARCH OR ELLIPTICAL PIPE CULVERTS SELECT APPROPRIATE "S" & "H" FROM SIZES SHOWN. ADD THE FOLLOWING ADDITIONAL BARS:

(a) 1 ADDITIONAL Y(E) BAR
(b) #4 - T1(E) BARS @ APPROX. 12" CTS. (NO. = S + 2)

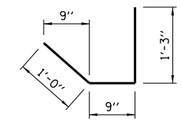

T1(E) BARS

THE WEIGHT OF THE ADDITIONAL BARS AND THE ADDITIONAL QUANTITY OF CONCRETE IN THE HEADWALL SHALL BE ADDED TO THE QUANTITIES SHOWN.

CULVERT SIZE	TABLE OF REINFORCING STEEL FOR ONE END																														
	H(E) DOWEL #4 @ 12"		J(E) DOWEL #6		P(E) BARS #4 @ 12"		P1(E) BARS #4 @ 12"				Q(E) BARS #4 @ 12"						R(E) BARS 3-#4	S(E) BARS 4-#4	U(E) BARS #4 @ 12"				V(E) BARS #4 @ 12"				4 W(E) BARS		Y(E) BARS 8-#5	T(E) BARS 8-#5 BOX CULVERT	T(E) BARS 8-#5 PIPE ARCH
S x H	NO.	LENGTH.	NO.	LENGTH.	NO.	LENGTH.	NO.	C_1	C_2	LENGTH.	NO.	C_3	C_4	C_5	C_6	LENGTH.	LENGTH.	LENGTH.	NO.	C_7	C_8	LENGTH.	NO.	C_9	C_{10}	LENGTH.	SIZE	LENGTH.	LENGTH.	LENGTH.	LENGTH.
3 x 2	6	2'-6"	4	4'-0"	4	13'-1"	2	8'-4"	4'-4"	17'-10"	5	8'-8"	4'-2"	6'-2"	6'-8"	12'-10"	8'-9"	10'-10"	2	8'-7"	4'-5"	13'-0"	10	2'-9"	6"	6'-3"	#5	10'-4"	3'-8"	3'-2"	3'-8"
3 x 3	8	2'-6"	4	4'-0"	4	17'-1"	3	12'-4"	4'-4"	21'-10"	7	10'-8"	4'-2"	7'-2"	7'-8"	14'-10"	10'-9"	15'-0"	3	12'-8"	4'-5"	17'-1"	14	3'-9"	6"	7'-3"	#5	14'-6"	3'-8"	4'-2"	4'-8"
4 x 2	6	2'-6"	4	4'-0"	5	13'-1"	2	8'-4"	4'-4"	17'-10"	5	9'-8"	5'-2"	7'-2"	7'-8"	14'-10"	9'-9"	10'-10"	2	8'-7"	4'-5"	13'-0"	10	2'-9"	6"	6'-3"	#5	10'-4"	4'-8"	3'-2"	3'-8"
4 x 3	8	2'-6"	4	4'-0"	5	17'-1"	3	12'-4"	4'-4"	21'-10"	7	11'-8"	5'-2"	8'-2"	8'-8"	16'-10"	11'-9"	15'-0"	3	12'-8"	4'-5"	17'-1"	14	3'-9"	6"	7'-3"	#5	14'-6"	4'-8"	4'-2"	4'-8"
4 x 4	10	2'-6"	4	4'-0"	5	21'-1"	4	16'-4"	4'-4"	25'-10"	9	13'-8"	5'-2"	9'-2"	9'-8"	18'-10"	13'-9"	19'-1"	4	16'-9"	4'-5"	21'-2"	18	4'-9"	6"	8'-3"	#6	18'-7"	4'-8"	5'-2"	5'-8"
5 x 2	6	2'-6"	4	4'-0"	6	13'-1"	2	8'-4"	4'-4"	17'-10"	5	10'-8"	6'-2"	8'-2"	8'-8"	16'-10"	10'-9"	10'-10"	2	8'-7"	4'-5"	13'-0"	10	2'-9"	6"	6'-3"	#5	10'-4"	5'-8"	3'-2"	3'-8"
5 x 3	8	2'-6"	4	4'-0"	6	17'-1"	3	12'-4"	4'-4"	21'-10"	7	12'-8"	6'-2"	9'-2"	9'-8"	18'-10"	12'-9"	15'-0"	3	12'-8"	4'-5"	17'-1"	14	3'-9"	6"	7'-3"	#5	14'-6"	5'-8"	4'-2"	4'-8"
5 x 4	10	2'-6"	4	4'-0"	6	21'-1"	4	16'-4"	4'-4"	25'-10"	9	14'-8"	6'-2"	10'-2"	10'-8"	20'-10"	14'-9"	19'-1"	4	16'-9"	4'-5"	21'-2"	18	4'-9"	6"	8'-3"	#6	18'-7"	5'-8"	5'-2"	5'-8"
6 x 3	8	2'-6"	4	4'-0"	7	17'-1"	3	12'-4"	4'-4"	21'-10"	7	13'-8"	7'-2"	10'-2"	10'-8"	20'-10"	13'-9"	15'-0"	3	12'-8"	4'-5"	17'-1"	14	3'-9"	6"	7'-3"	#5	14'-6"	6'-8"	4'-2"	4'-8"
6 x 4	10	2'-6"	4	4'-0"	7	21'-1"	4	16'-4"	4'-4"	25'-10"	9	15'-8"	7'-2"	11'-2"	11'-8"	22'-10"	15'-9"	19'-1"	4	16'-9"	4'-5"	21'-2"	18	4'-9"	6"	8'-3"	#6	18'-7"	6'-8"	5'-2"	5'-8"
7 x 3	8	2'-6"	4	4'-0"	8	17'-1"	3	12'-4"	4'-4"	21'-10"	7	14'-8"	8'-2"	11'-2"	11'-8"	22'-10"	14'-9"	15'-0"	3	12'-8"	4'-5"	17'-1"	14	3'-9"	6"	7'-3"	#5	14'-6"	7'-8"	4'-2"	4'-8"
7 x 4	10	2'-6"	4	4'-0"	8	21'-1"	4	16'-4"	4'-4"	25'-10"	9	16'-8"	8'-2"	12'-2"	12'-8"	24'-10"	16'-9"	19'-1"	4	16'-9"	4'-5"	21'-2"	18	4'-9"	6"	8'-3"	#6	18'-7"	7'-8"	5'-2"	5'-8"
8 x 4	10	2'-6"	4	4'-0"	9	21'-1"	4	16'-4"	4'-4"	25'-10"	9	17'-8"	9'-2"	13'-2"	13'-8"	26'-10"	17'-9"	19'-1"	4	16'-9"	4'-5"	21'-2"	18	4'-9"	6"	8'-3"	#6	18'-7"	8'-8"	5'-3"	5'-8"

NOTE:

REINFORCEMENT BARS BENDING DIMENSIONS ARE OUT TO OUT.

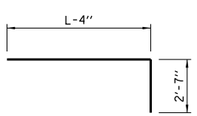

P(E) BARS

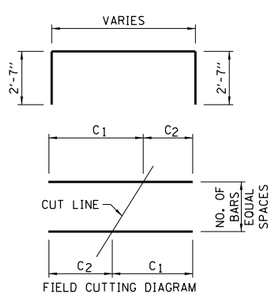

P1(E) BARS

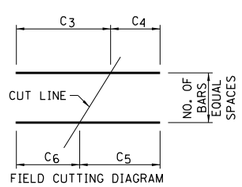

Q(E) BARS

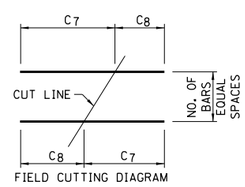

U(E) BARS

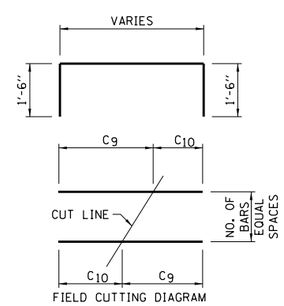

V(E) BARS

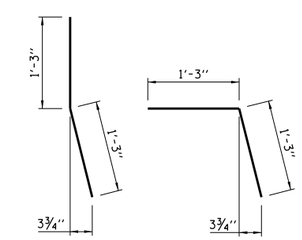

FOR BOX CULVERTS FOR PIPE ARCHES

H(E) DOWELS

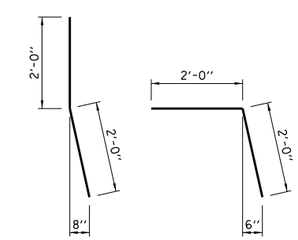

FOR BOX CULVERTS FOR PIPE ARCHES

J(E) DOWELS

SHEET 2 OF 2

Illinois Tollway

SAFETY END TREATMENT FOR SINGLE CULVERTS
0° SKEW 1:4
SLOPE H ≤ 4'

STANDARD B13-05

APPROVED Paul Kovacs CHIEF ENGINEER DATE 6-1-2009

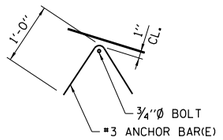

ANCHOR BARS

CONTRACTOR SHALL PROVIDE 2-#3 ANCHOR BARS(E) PER SIDEWALL BOLT.

DETAIL B

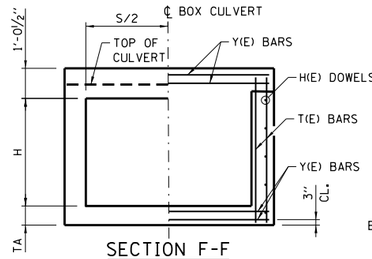

SECTION F-F

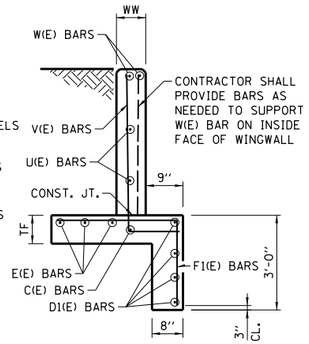

SECTION A-A

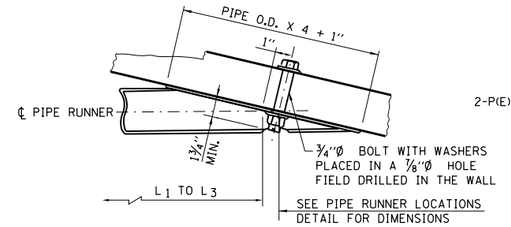

SECTION AT WING

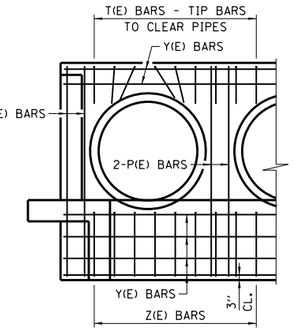

SECTION C-C

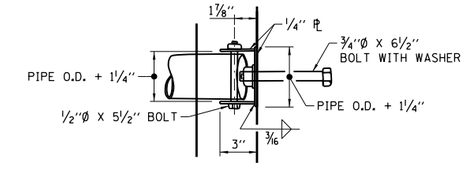

PLAN AT HEADWALL

NOTE:

A 3/4"Ø X 9 1/2" BOLT WITH ADDITIONAL PL WASHER PLACED IN A 7/8"Ø HOLE DRILLED THROUGH THE HEADWALL OR A 3/4"Ø X 8" THREADED ROD EPOXY GROUTED IN A 7/8"Ø HOLE WITH A MINIMUM EMBEDMENT OF 6 5/8" MAY BE USED IN LIEU OF CAST-IN-PLACE BOLT SHOWN.

NOTE:

F & V BAR TO BE FIELD CUT PER CUTTING DIAGRAM. PLACE BARS WITH DIMENSIONS C2, C6 BEGINNING AT HEADWALL & BARS WITH DIMENSIONS C_1, C_5 BEGINNING AT THE TOEWALL END.

NOTE:

J & H, DOWEL BARS NOT REQUIRED WITH EXISTING BOX CULVERTS PROVIDING THE REINFORCING FROM THE EXISTING BOX IS EXTENDED INTO THE NEW CONCRETE A MINIMUM OF 1'-3".

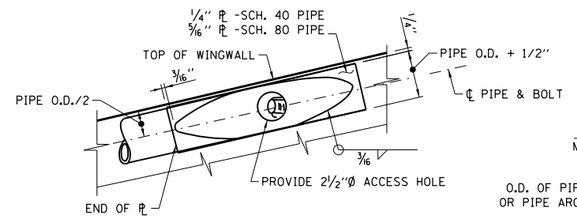

ELEVATION AT WING

NOTE:

PIPE O.D. IS THE PIPE RUNNER OUTSIDE DIAMETER.

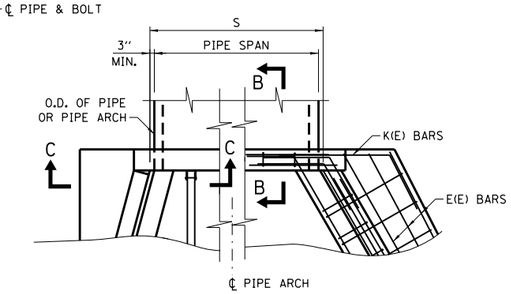

HALF PLAN SHOWING DIMENSIONS

HALF PLAN SHOWING REINFORCEMENT BARS

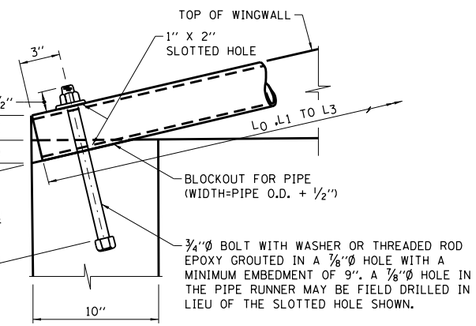

SECTION THRU TOEWALL

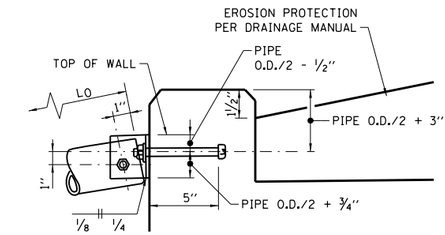

ELEVATION AT HEADWALL

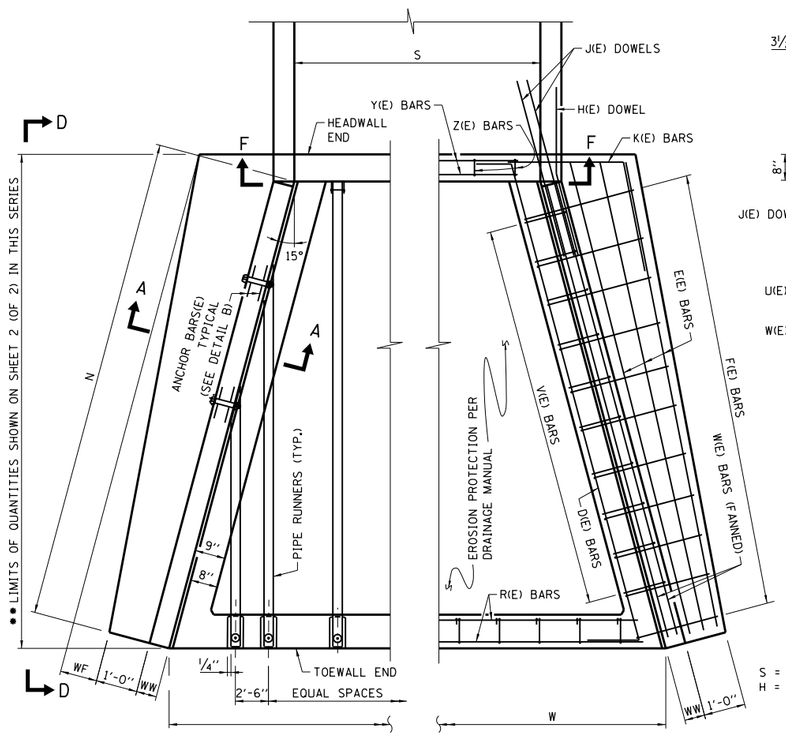

HALF PLAN SHOWING DIMENSIONS

HALF PLAN SHOWING REINFORCEMENT BARS

FOR BOX CULVERTS

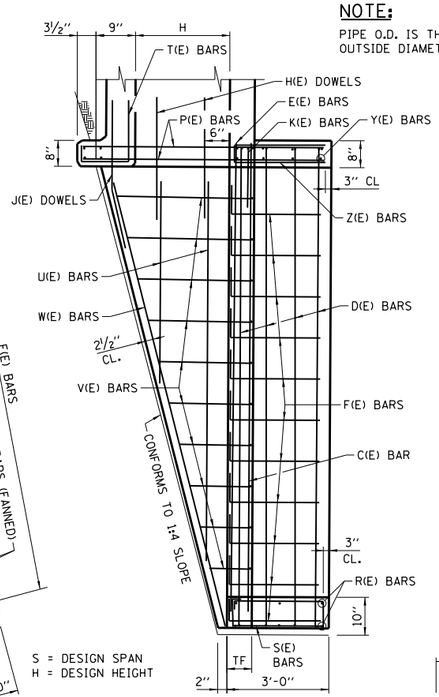

ELEVATION D-D

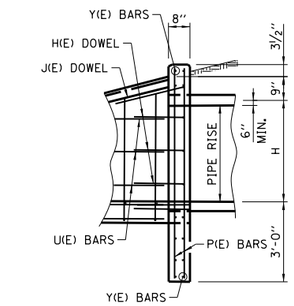

SECTION B-B

FOR PIPE AND PIPE-ARCH CULVERTS

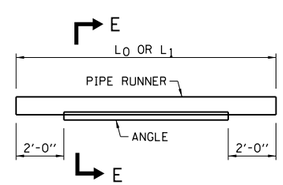

DETAIL A

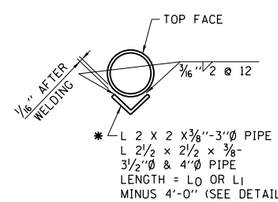

SECTION E-E

* NOTE:

WHERE L_0 OR L_1 EXCEEDS THE FOLLOWING LENGTH, THE PIPE RUNNER SHALL BE STRENGTHENED OVER THE MIDSPAN AS SHOWN.

PIPE	LENGTH
3"Ø, SCH. 40	12'-8"
3 1/2"Ø, SCH. 40	17'-3"
3 1/2"Ø, SCH. 80	22'-1"
4"Ø, SCH. 40	22'-6"
4"Ø, SCH. 80	29'-4"

PIPE RUNNER DETAILS

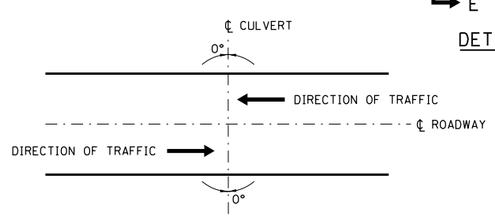

CULVERT SKEW ORIENTATION

GENERAL NOTES:

1. ALL CONCRETE SHALL BE CLASS SI.
2. ALL EXPOSED CONCRETE EDGES SHALL HAVE A 3/4" × 45° CHAMFER. CHAMFER ON VERTICAL EDGES SHALL BE CONTINUED A MINIMUM OF ONE FOOT BELOW FINISHED GROUND LEVEL. COVER FROM THE FACE OF CONCRETE TO THE FACE OF REINFORCEMENT BARS SHALL BE 2", UNLESS OTHERWISE SHOWN.
3. CONCRETE QUANTITIES SHOWN ON SHEET 2 (OF 2) IN THIS SERIES ARE FOR REINFORCED CONCRETE BOX CULVERT SECTIONS AND ADDITIONAL CONCRETE REQUIRED IN HEADWALLS FOR PIPE OR ARCH CULVERT SECTIONS SHALL BE ADDED TO THESE QUANTITIES.
4. THIS STANDARD MAY BE USED FOR CULVERTS WITH SKEW OF 0° ± 7.5°. AS SHOWN PER CULVERT SKEW ORIENTATION ON THIS SHEET.
5. DESIGN: SAFETY PIPE RUNNERS ARE DESIGNED FOR A TRANSVERSING LOAD OF 1,800 POUNDS AT YIELD AS RECOMMENDED BY RESEARCH REPORT 280-1, SAFETY TREATMENT OF ROADSIDE CROSS DRAINAGE STRUCTURES, TEXAS TRANSPORTATION INSTITUTE, MARCH 1981.
6. ALL SLOPES ARE EXPRESSED AS UNITS OF VERTICAL DISPLACEMENT TO UNITS OF HORIZONTAL DISPLACEMENT (V:H).
7. FOR EROSION PROTECTION SEE STANDARD B19.
8. ALL REINFORCEMENT BARS SHALL BE EPOXY COATED (E).

SHEET 1 OF 2

Illinois Tollway

DATE	REVISIONS
3-01-2010	REVISED EROSION PROTECTION AND NOTES.
2-07-2012	TABLE QUANTITIES REVISED.
3-31-2014	TABLE QUANTITIES REVISED.
3-11-2015	REVISED NOTES.

SAFETY END TREATMENT FOR SINGLE AND MULTIPLE CULVERTS
0° SKEW 1:4
SLOPE H ≤ 8'

STANDARD B14-05

Paul Kovacs
APPROVED CHIEF ENGINEER
DATE 6-1-2009

TABLE OF DIMENSIONS							TABLE OF REINFORCEMENT BARS FOR ONE END																							
							C(E) BARS 2 REQD.		D(E) BARS 8-#4	E(E) BARS #4 (5)		F(E) BARS					H(E) DOWEL #5 @ 12"	J(E) DOWEL 4-#6	K(E) DOWEL 2-#5	U(E) BARS #4 @ 12"				V(E) BARS #4 @ 12" CTS.					W(E) BARS 4 REQD.	
S	H	L	WF	WW	TF	N	SIZE	LENGTH	LENGTH	NO.	LENGTH	SIZE	NO.	C_1	C_2	LENGTH	NO.	LENGTH	LENGTH	LENGTH	NO.	C_3	C_4	LENGTH	NO.	C_5	C_6	C_7	LENGTH	SIZE	LENGTH
9'	3'	14'-4"	3"	7"	7"	14'-10 1/8"	#4	15'-2"	17'-2"	4	16'-8"	#4	15	2'-0"	2'-2"	9'-4"	6	3'-0"	4'-6"	4'-0"	3	12'-8"	4'-5"	17'-1"	14	9"	3'-10"	1'-0"	6'-7"	#5	14'-11"
9'	4'	18'-4"	9"	7"	8"	18'-11 3/4"	#4	19'-4"	21'-4"	4	20'-10"	#4	19	2'-0"	2'-8"	9'-10"	8	3'-0"	4'-6"	4'-6"	4	16'-10"	4'-5"	21'-3"	18	10"	4'-11"	1'-0"	7'-9"	#6	19'-2"
5'	5'	22'-4"	1'-3"	7"	8"	23'-1 1/2"	#4	23'-6"	25'-6"	4	25'-0"	#4	23	2'-0"	3'-2"	10'-4"	10	3'-0"	4'-6"	5'-0"	5	20'-11"	4'-5"	25'-4"	22	10"	5'-11"	1'-0"	8'-9"	#6	23'-5"
6'	6'	26'-4"	1'-9"	7"	8 1/2"	27'-3 1/8"	#4	27'-7"	29'-7"	6	29'-1"	#5	27	2'-0"	3'-8"	10'-10"	12	3'-0"	4'-6"	5'-6"	6	25'-1"	4'-5"	29'-6"	26	10"	6'-11"	1'-0"	9'-9"	#6	27'-8"
7'	7'	30'-4"	2'-3"	7"	9"	31'-4 7/8"	#5	31'-9"	33'-9"	6	33'-3"	#5	31	2'-1"	4'-3"	11'-6"	14	3'-0"	4'-6"	6'-0"	7	29'-2"	4'-5"	33'-7"	30	11"	8'-0"	1'-0"	10'-11"	#6	31'-11"
8'	8'	34'-4"	2'-9"	8"	9 1/2"	35'-6 1/2"	#5	35'-10"	37'-10"	6	37'-4"	#6	35	2'-2"	4'-10"	12'-2"	16	3'-0"	4'-6"	6'-6"	8	33'-4"	4'-5"	37'-9"	34	11"	9'-0"	1'-1"	12'-1"	#6	36'-2"

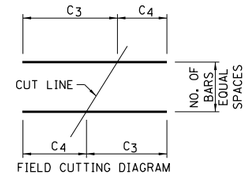

FIELD CUTTING DIAGRAM

U(E) BARS

PIPE RUNNERS FOR ONE END								
S	H	SIZE (DIA.)	SCHEDULE	NO. WINGWALL PIPES	L1	L2	L3	LENGTH (FT.)
9'	3'	3"	40	2	9'-11"	--	--	19.84
9'	4'	3"	40	2	14'-0"	--	--	28.00
5'	5'	3 1/2"	40	4	18'-1"	8'-6"	--	53.16
6'	6'	3 1/2"	80	4	22'-3"	12'-7"	--	69.66
7'	7'	4"	40	6	26'-4"	16'-9"	7'-2"	100.50
8'	8'	4"	80	6	30'-6"	20'-10"	11'-7"	125.83

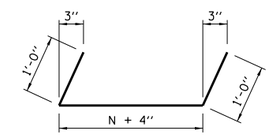

D(E) BARS

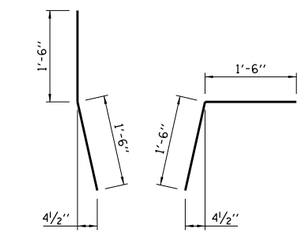

FOR BOX CULVERTS FOR PIPE CULVERTS

H(E) DOWELS

	TABLE OF DIMENSIONS		TABLE OF REINFORCEMENT BARS FOR MINIMUM "S"									HEADWALL PIPE RUNNERS FOR MINIMUM "S"					QUANTITIES FOR MIN. "S" (SINGLE PIPE OR CONC. BOX CULVERT)		INCREASE IN QUANTITIES FOR 1' INCREASE IN "S"	
			(2) Y(E) BARS 12-#5	(1) Z(E) BARS #4 @ 12"		(2) R(E) BARS 6-#5	(1) S(E) BARS #4 @ 12"		(1) T(E) BARS #4 @ 12"		(3) P(E) BARS 8-#5									
S	H	W (4)	LENGTH	NO.	LENGTH	LENGTH	NO.	LENGTH	NO.	LENGTH	LENGTH	SIZE (DIA.)	SCHEDULE	NO.	L_O	LENGTH (FT.)	CONCRETE CU. YD.	REIN. BARS POUND	CONCRETE CU. YD.	REIN. BARS POUND
≧ 9'	3'	16'-8"	9'-10"	9	5'-4"	15'-10"	16	6'-10"	9	3'-0"	6'-8"	3"	40	4	14'-9"	59.00	7.24	863	0.35	13
≧ 9'	4'	18'-9"	9'-10"	9	5'-4"	17'-11"	18	6'-10"	9	3'-0"	7'-8"	3"	40	4	18'-10"	75.33	10.44	1078	0.35	13
≧ 5'	5'	16'-11"	5'-10"	5	5'-4"	16'-1"	16	6'-10"	5	3'-0"	8'-8"	3 1/2"	40	2	23'-0"	46.00	10.87	1162	0.35	13
≧ 6'	6'	20'-1"	6'-10"	6	5'-4"	19'-3"	19	6'-10"	6	3'-0"	9'-8"	3 1/2"	80	3	27'-2"	81.51	14.77	1553	0.35	13
≧ 7'	7'	23'-3"	7'-10"	7	5'-4"	22'-5"	22	6'-10"	7	3'-0"	10'-8"	4"	40	3	31'-3"	93.75	19.47	1869	0.35	13
≧ 8'	8'	26'-4"	9'-0"	8	5'-4"	25'-6"	25	6'-10"	8	3'-0"	11'-8"	4"	80	4	35'-4"	141.33	25.01	2379	0.35	13

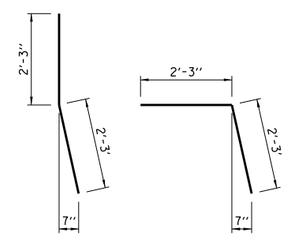

FOR BOX CULVERTS FOR PIPE CULVERTS

J(E) DOWELS

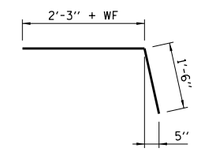

K(E) DOWEL

NUMBER OF HDWL PIPE RUNNERS FOR ONE END			
S	No	S	No
10'	4	23'	10
11'	5	24'	10
12'	5	25'	10
13'	6	26'	11
14'	6	27'	11
15'	6	28'	12
16'	7	29'	12
17'	7	30'	12
18'	8	31'	13
19'	8	32'	13
20'	8	33'	14
21'	9	34'	14
22'	9	35'	14

NOTE:

REINFORCEMENT BARS BENDING DIMENSIONS ARE OUT TO OUT.

NOTES FOR TABLE OF DIMENSIONS:

(1) THE NUMBER OF S, T AND Z BARS SHALL BE INCREASED BY 1 FOR EACH 1 FOOT OF INCREASE IN DIMENSION "S".

(2) THE LENGTH OF R AND Y BARS SHALL BE INCREASED BY 1 FOOT FOR EACH 1 FOOT OF INCREASE IN DIMENSION "S".

(3) THE NUMBER OF P BARS SHOWN ARE FOR SINGLE SPAN PIPES OR BOX CULVERTS. THIS NUMBER SHALL BE INCREASED BY 4 FOR EACH MULTIPLE OF PIPE OR BOX ADDED.

(4) THIS DIMENSION SHALL BE INCREASED BY 1 FOOT FOR EACH 1 FOOT INCREASE IN DIMENSION "S".

(5) THE LENGTH OF THIS BAR INCLUDES ONE 1'-6" MINIMUM LAP.

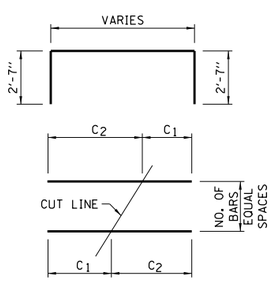

FIELD CUTTING DIAGRAM

F(E) BARS

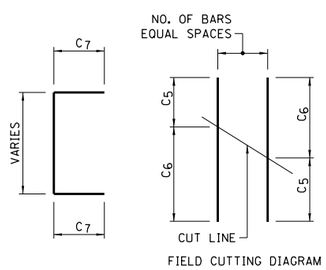

FIELD CUTTING DIAGRAM

V(E) BARS

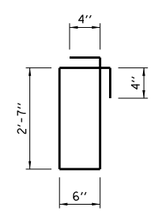

S(E) BARS

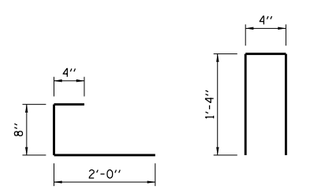

FOR BOX CULVERTS FOR PIPE CULVERTS

T(E) BARS

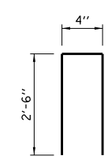

Z(E) BARS

SHEET 2 OF 2

Illinois Tollway

SAFETY END TREATMENT FOR SINGLE AND MULTIPLE CULVERTS
0° SKEW 1:4
SLOPE H ≤ 8'

STANDARD B14-05

Paul Kovacs
APPROVED CHIEF ENGINEER DATE 6-1-2009

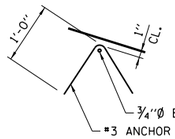

ANCHOR BARS

CONTRACTOR SHALL PROVIDE 2-#3 ANCHOR BARS(E) PER SIDEWALL BOLT.

DETAIL B

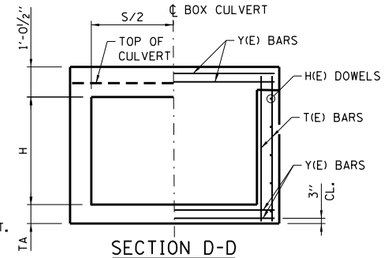

SECTION D-D

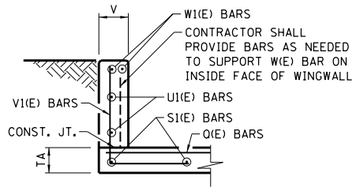

SECTION A-A

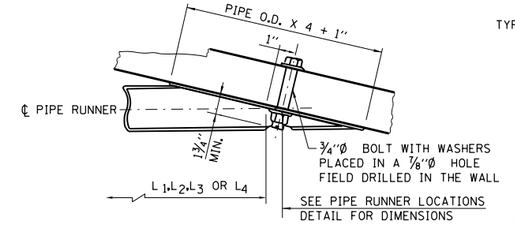

SECTION AT WING

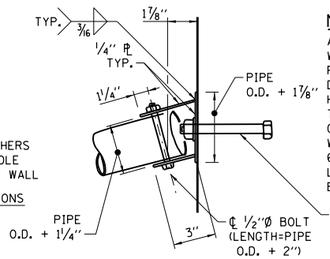

PLAN AT HEADWALL

NOTE:

A 3/4"Ø X 9 1/2" BOLT WITH ADDITIONAL PL WASHER PLACED IN A 7/8"Ø HOLE DRILLED THROUGH THE HEADWALL OR A 3/4"Ø X 8" THREADED ROD EPOXY GROUTED IN A 7/8"Ø HOLE WITH A MIN. EMBEDMENT OF 6 5/8" MAY BE USED IN LIEU OF CAST-IN-PLACE BOLT SHOWN.

NOTE:

O, V, AND V_1 BARS ARE TO BE FIELD CUT PER CUTTING DIAGRAM. PLACE BARS WITH DIMENSIONS C_2-C_3, C_9-C_{12} BEGINNING AT HEADWALL AND BARS WITH DIMENSIONS C_1-C_4, C_{10}-C_{11} BEGINNING AT THE TOEWALL END.

NOTE:

P1 BARS ARE TO BE FIELD CUT PER CUTTING DIAGRAM PLACE BARS WITH DIMENSIONS C_6-C_7 BEGINNING AT TOEWALL END OF 30° WING AND BARS WITH DIMENSIONS C_5-C_8 BEGINNING PARALLEL THE P(E) BARS.

NOTE:

J & H DOWEL BAR NOT REQUIRED WITH EXISTING BOX CULVERTS PROVIDING THE REINFORCING FROM THE EXIST. BOX IS EXTENDED INTO THE NEW CONCRETE A MIN. OF 1'-3".

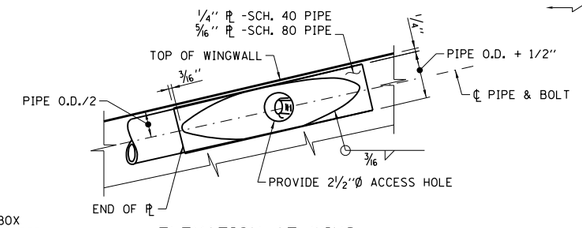

ELEVATION AT WING

NOTE:

PIPE O.D. IS THE PIPE RUNNER OUTSIDE DIAMETER.

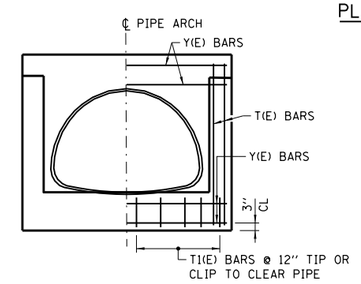

SECTION B-B

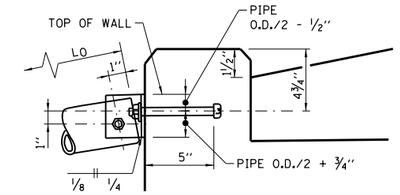

ELEVATION AT HEADWALL

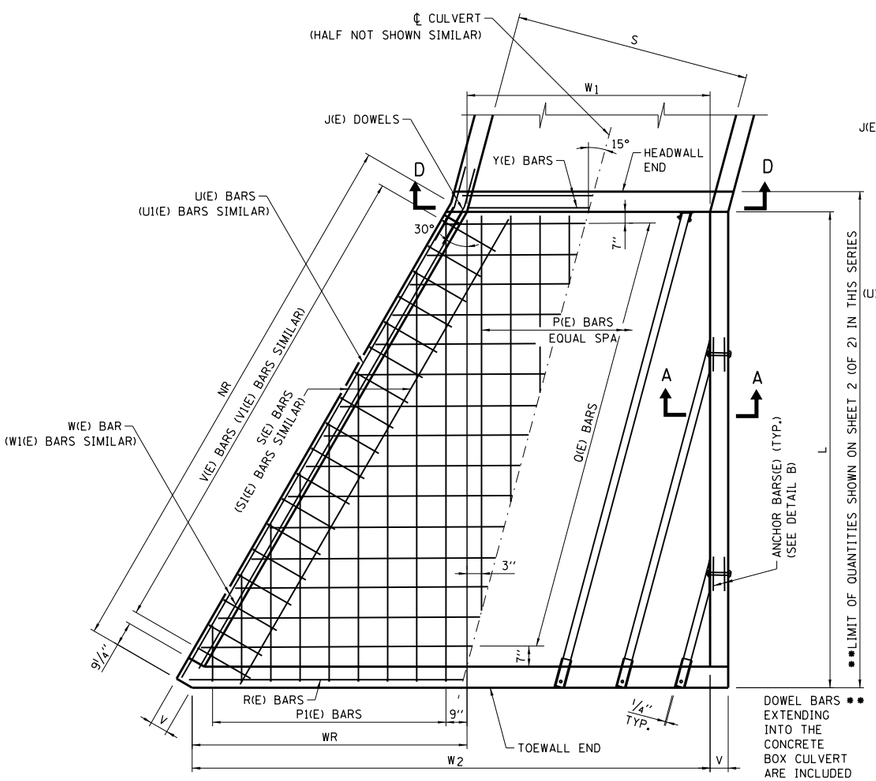

HALF PLAN SHOWING REINFORCEMENT BARS

HALF PLAN SHOWING DIMENSIONS

S = DESIGN SPAN
H = DESIGN HEIGHT

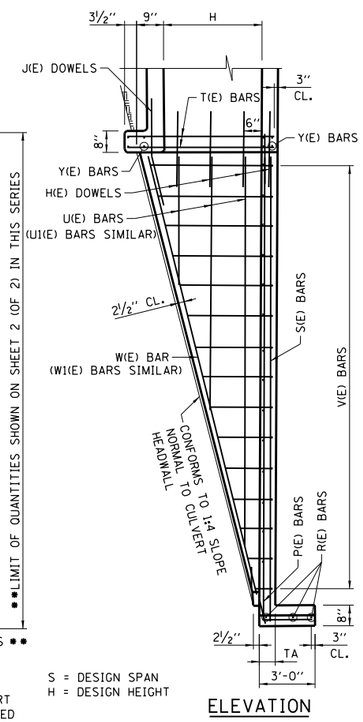

ELEVATION

BOX CULVERT DETAILS

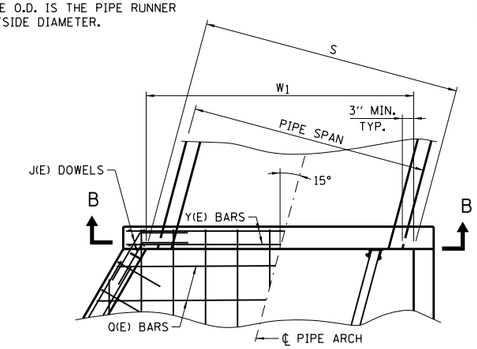

HALF PLAN SHOWING REINFORCEMENT BARS

HALF PLAN SHOWING DIMENSIONS

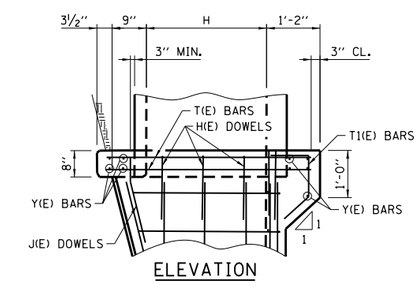

ELEVATION

PIPE ARCH DETAILS

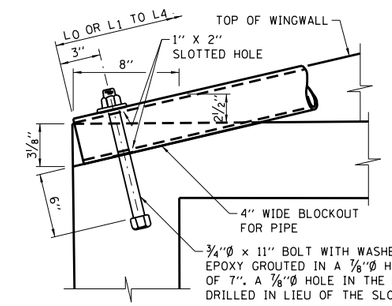

SECTION THRU TOEWALL

PIPE RUNNER DETAILS

GENERAL NOTES:

1. ALL CONCRETE SHALL BE CLASS SI.
2. ALL EXPOSED CONCRETE EDGES SHALL HAVE A 3/4" X 45° CHAMFER. CHAMFER ON VERTICAL EDGES SHALL BE CONTINUED A MINIMUM OF ONE FOOT BELOW FINISHED GROUND LEVEL. COVER FROM THE FACE OF CONCRETE TO THE FACE OF REINFORCEMENT BARS SHALL BE 2", UNLESS OTHERWISE SHOWN.
3. CONCRETE QUANTITIES SHOWN ON SHEET 2 (OF 2) IN THIS SERIES ARE FOR REINFORCED CONCRETE BOX CULVERT SECTIONS AND ADDITIONAL CONCRETE REQUIRED IN HEADWALLS FOR PIPE OR ARCH CULVERT SECTIONS SHALL BE ADDED TO THESE QUANTITIES.
4. THIS STANDARD MAY BE USED FOR CULVERTS WITH SKEW OF 15° ± 7.5°. AS SHOWN PER CULVERT SKEW ORIENTATION ON THIS SHEET.
5. DESIGN: SAFETY PIPE RUNNERS ARE DESIGNED FOR A TRANSVERSING LOAD OF 1,800 POUNDS AT YIELD AS RECOMMENDED BY RESEARCH REPORT 280-1, SAFETY TREATMENT OF ROADSIDE CROSS DRAINAGE STRUCTURES, TEXAS TRANSPORTATION INSTITUTE, MARCH 1981.
6. ALL SLOPES ARE EXPRESSED AS UNITS OF VERTICAL DISPLACEMENT TO UNITS OF HORIZONTAL DISPLACEMENT (V:H).
7. FOR EROSION PROTECTION SEE STANDARD B19.
8. ALL REINFORCEMENT BARS SHALL BE EPOXY COATED (E).

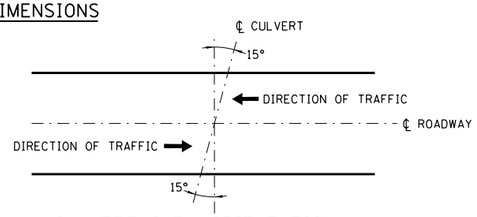

CULVERT SKEW ORIENTATION

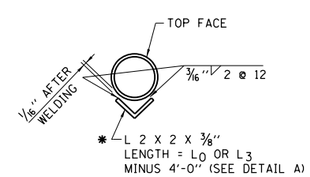

SECTION C-C

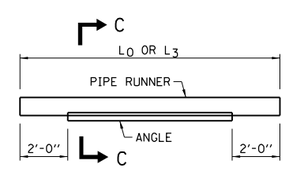

DETAIL A

*NOTE:

WHERE L_0 OR L_3 EXCEEDS THE FOLLOWING LENGTH, THE PIPE RUNNER SHALL BE STRENGTHENED OVER THE MIDSPAN AS SHOWN.

PIPE	LENGTH
3"Ø, SCH. 40	12'-8"
3"Ø, SCH. 80	15'-4"

SHEET 1 OF 2

Illinois Tollway

DATE	REVISIONS
06-01-09	REVISED NOTES
03-01-10	MODIFIED CULVERT SKEW
03-01-10	DETAIL, REVISED EROSION PROTECTION AND NOTES
02-07-12	TABLE QUANTITIES REVISED
3-11-2015	REVISED NOTES

SAFETY END TREATMENT FOR SINGLE CULVERTS
15° SKEW 1:4
SLOPE H ≤ 4'

STANDARD B15-04

Paul Kovacs
APPROVED CHIEF ENGINEER DATE 6-1-2009

CULVERT SIZE (FEET)	TABLE OF DIMENSIONS							PIPE RUNNERS FOR ONE END SIZE 3" DIA.							TABLE OF REINFORCEMENT BARS FOR ONE END													
								HEADWALL PIPE			WINGWALL PIPE - ONE PER EACH LENGTH SHOWN				H(E) DOWELS #4 @ 12"				J(E) DOWELS 2-#6 EACH WALL		P(E) BARS #4 - EQUALLY SPACED		P1(E) BARS #4 @ 12"					
											0° WALL		30° WALL		30° WALL		0° WALL		30° WALL	0° WALL								
S X H	L	NR	V	W_1	W_2	WR	TA	SCH.	NO.	LENGTH	L_1	L_2	L_3	L_4	NO.	LENGTH	NO.	LENGTH	LENGTH	LENGTH	NO.	LENGTH	NO.	C_5	C_6	C_7	C_8	LENGTH
3 x 2	10'-10"	12'-6⅛"	7"	3'-1¼"	9'-4¼"	6'-3"	6"	40	2	11'-5"	6'-3"	-	7'-0"	-	3	2'-6"	3	2'-6"	4'-0"	4'-0"	4	13'-1"	3	10'-2"	1'-6"	5'-0"	6'-8"	16'-10"
3 x 3	14'-10"	17'-1½"	7"	3'-1¼"	11'-8"	8'-6¾"	6"	40	2	15'-8"	10'-6"	-	11'-3"	-	4	2'-6"	4	2'-6"	4'-0"	4'-0"	4	17'-1"	4	14'-2"	2'-0"	7'-3"	8'-11"	21'-4"
4 x 2	10'-10"	12'-6⅛"	7"	4'-1¾"	10'-4¾"	6'-3"	6"	40	2	11'-5"	6'-3"	-	7'-0"	-	3	2'-6"	3	2'-6"	4'-0"	4'-0"	5	13'-1"	3	10'-2"	1'-6"	5'-0"	6'-8"	16'-10"
4 x 3	14'-10"	17'-1½"	7"	4'-1¾"	12'-8½"	8'-6¾"	6"	40	2	15'-8"	10'-6"	-	11'-3"	-	4	2'-6"	4	2'-6"	4'-0"	4'-0"	5	17'-1"	4	14'-2"	2'-0"	7'-3"	8'-11"	21'-4"
4 x 4	18'-10"	21'-9"	7"	4'-1¾"	15'-0¼"	10'-10½"	6"	80	2	19'-11"	14'-9"	4'-6"	15'-6"	6'-7"	5	2'-6"	5	2'-6"	4'-0"	4'-0"	5	21'-1"	5	18'-2"	2'-5"	9'-5"	11'-2"	25'-9"
5 x 2	10'-10"	12'-6⅛"	7"	5'-2⅛"	11'-5⅛"	6'-3"	6"	40	2	11'-5"	6'-3"	-	7'-0"	-	3	2'-6"	3	2'-6"	4'-0"	4'-0"	6	13'-1"	3	10'-2"	1'-6"	5'-0"	6'-8"	16'-10"
5 x 3	14'-10"	17'-1½"	7"	5'-2⅛"	13'-8⅞"	8'-6¾"	6"	40	2	15'-8"	10'-6"	-	11'-3"	-	4	2'-6"	4	2'-6"	4'-0"	4'-0"	6	17'-1"	4	14'-2"	2'-0"	7'-3"	8'-11"	21'-4"
5 x 4	18'-10"	21'-9"	7"	5'-2⅛"	16'-0⅝"	10'-10½"	6"	80	2	19'-11"	14'-9"	4'-6"	15'-6"	6'-7"	5	2'-6"	5	2'-6"	4'-0"	4'-0"	6	21'-1"	5	18'-2"	2'-5"	9'-5"	11'-2"	25'-9"
6 x 3	14'-10"	17'-1½"	7"	6'-2½"	14'-9¼"	8'-6¾"	6"	40	3	15'-8"	10'-6"	-	11'-3"	-	4	2'-6"	4	2'-6"	4'-0"	4'-0"	7	17'-1"	4	14'-2"	2'-0"	7'-3"	8'-11"	21'-4"
6 x 4	18'-10"	21'-9"	7"	6'-2½"	17'-1"	10'-10½"	6"	80	3	19'-11"	14'-9"	4'-6"	15'-6"	6'-7"	5	2'-6"	5	2'-6"	4'-0"	4'-0"	7	21'-1"	5	18'-2"	2'-5"	9'-5"	11'-2"	25'-9"
7 x 3	14'-10"	17'-1½"	7"	7'-3"	15'-9¾"	8'-6¾"	6½"	40	3	15'-8"	10'-6"	-	11'-3"	-	4	2'-6"	4	2'-6"	4'-0"	4'-0"	8	17'-1"	4	14'-2"	2'-0"	7'-3"	8'-11"	21'-4"
7 x 4	18'-10"	21'-9"	7"	7'-3"	18'-1½"	10'-10½"	6½"	80	3	19'-11"	14'-9"	4'-6"	15'-6"	6'-7"	5	2'-6"	5	2'-6"	4'-0"	4'-0"	8	21'-1"	5	18'-2"	2'-5"	9'-5"	11'-2"	25'-9"
8 x 4	18'-10"	21'-9"	7"	8'-3⅜"	19'-1⅞"	10'-10½"	7"	80	4	19'-11"	14'-9"	4'-6"	15'-6"	6'-7"	5	2'-6"	5	2'-6"	4'-0"	4'-0"	9	21'-1"	5	18'-2"	2'-5"	9'-5"	11'-2"	25'-9"

CULVERT SIZE (FEET)	TABLE OF REINFORCEMENT BARS FOR ONE END																															
	Q(E) BARS #4 @ 12"						R(E) BARS 3-#4	S(E) BARS 30° WALL 2-#4	S1(E) BARS 0° WALL 2-#4	T(E) BARS 8-#5 BOX CULVERT	T(E) BARS 8-#5 PIPE ARCH	U(E) BARS-ONE PER EACH LENGTH SHOWN #4 @ 12"				U1(E) BARS ONE PER EACH LENGTH SHOWN #4 @ 12"				V(E) BARS #4 - EQUALLY SPACED					V1(E) BARS #4 - EQUALLY SPACED					
												30° WALL				0° WALL				30° WALL					0° WALL					
S X H	NO.	C_1	C_2	C_3	C_4	LENGTH	LENGTH	LENGTH	LENGTH	LENGTH	LENGTH	C_5	C_6	C_7	C_8	C_5	C_6	C_7	C_8	NO.	C_9	C_{10}	C_{11}	C_{12}	LENGTH	NO.	C_9	C_{10}	C_{11}	C_{12}	LENGTH
3 x 2	5	9'-7"	4'-4"	6'-8"	7'-3"	13'-11"	9'-10"	12'-2"	10'-6"	3'-2"	3'-8"	5'-0"	9'-8"	-	-	4'-4"	8'-4"	-	-	6	2'-9"	6"	1'-6"	1'-9"	6'-3"	5	2'-9"	6"	1'-6"	1'-9"	6'-3"
3 x 3	7	11'-10"	4'-4"	7'-9"	8'-5"	16'-2"	12'-2"	16'-9"	14'-6"	4'-2"	4'-8"	5'-0"	9'-8"	14'-3"	-	4'-4"	8'-4"	12'-4"	-	8	3'-9"	6"	2'-0"	2'-3"	7'-3"	7	3'-9"	6"	2'-0"	2'-3"	7'-3"
4 x 2	5	10'-7"	5'-5"	7'-8"	8'-4"	16'-0"	10'-10"	12'-2"	10'-6"	3'-2"	3'-8"	5'-0"	9'-8"	14'-3"	-	4'-4"	8'-4"	-	-	6	2'-9"	6"	1'-6"	1'-9"	6'-3"	5	2'-9"	6"	1'-6"	1'-9"	6'-3"
4 x 3	7	12'-11"	5'-5"	8'-10"	9'-6"	18'-4"	13'-2"	16'-9"	14'-6"	4'-2"	4'-8"	5'-0"	9'-8"	-	-	4'-4"	8'-4"	12'-4"	-	8	3'-9"	6"	2'-0"	2'-3"	7'-3"	7	3'-9"	6"	2'-0"	2'-3"	7'-3"
4 x 4	9	15'-2"	5'-5"	10'-0"	10'-7"	20'-7"	15'-6"	21'-4"	18'-6"	5'-2"	5'-8"	5'-0"	9'-8"	14'-3"	18'-10"	4'-4"	8'-4"	12'-4"	16'-4"	10	4'-9"	6"	2'-6"	2'-9"	8'-3"	9	4'-9"	6"	2'-6"	2'-9"	8'-3"
5 x 2	5	11'-8"	6'-5"	8'-7"	9'-3"	18'-1"	11'-11"	12'-2"	10'-6"	3'-2"	3'-8"	5'-0"	9'-8"	-	-	4'-4"	8'-4"	-	-	6	2'-9"	6"	1'-6"	1'-9"	6'-3"	5	2'-9"	6"	1'-6"	1'-9"	6'-3"
5 x 3	7	13'-11"	6'-5"	9'-10"	10'-6"	20'-4"	14'-2"	16'-9"	14'-6"	4'-2"	4'-8"	5'-0"	9'-8"	14'-3"	-	4'-4"	8'-4"	12'-4"	-	8	3'-9"	6"	2'-0"	2'-3"	7'-3"	7	3'-9"	6"	2'-0"	2'-3"	7'-3"
5 x 4	9	16'-3"	6'-5"	11'-0"	11'-8"	22'-8"	16'-6"	21'-4"	18'-6"	5'-2"	5'-8"	5'-0"	9'-8"	14'-3"	18'-10"	4'-4"	8'-4"	12'-4"	16'-4"	10	4'-9"	6"	2'-6"	2'-9"	8'-3"	9	4'-9"	6"	2'-6"	2'-9"	8'-3"
6 x 3	7	14'-11"	7'-5"	10'-10"	11'-6"	22'-4"	15'-3"	16'-9"	14'-6"	4'-2"	4'-8"	5'-0"	9'-8"	14'-3"	-	4'-4"	8'-4"	12'-4"	-	8	3'-9"	6"	2'-0"	2'-3"	7'-3"	7	3'-9"	6"	2'-0"	2'-3"	7'-3"
6 x 4	9	17'-3"	7'-5"	12'-0"	12'-8"	24'-8"	17'-6"	21'-4"	18'-6"	5'-2"	5'-8"	5'-0"	9'-8"	14'-3"	18'-10"	4'-4"	8'-4"	12'-4"	16'-4"	10	4'-9"	6"	2'-6"	2'-9"	8'-3"	9	4'-9"	6"	2'-6"	2'-9"	8'-3"
7 x 3	7	16'-0"	8'-6"	11'-11"	12'-7"	24'-6"	16'-3"	16'-9"	14'-6"	4'-2"	4'-8"	5'-0"	9'-8"	14'-3"	-	4'-4"	8'-4"	12'-4"	-	8	3'-9"	6"	2'-0"	2'-3"	7'-3"	7	3'-9"	6"	2'-0"	2'-3"	7'-3"
7 x 4	9	18'-4"	8'-6"	13'-1"	13'-9"	26'-10"	18'-7"	21'-4"	18'-6"	5'-2"	5'-8"	5'-0"	9'-8"	14'-3"	18'-10"	4'-4"	8'-4"	12'-4"	16'-4"	10	4'-9"	6"	2'-6"	2'-9"	8'-3"	9	4'-9"	6"	2'-6"	2'-9"	8'-3"
8 x 4	9	19'-4"	9'-6"	14'-1"	14'-9"	28'-10"	19'-7"	21'-4"	18'-6"	5'-2"	5'-8"	5'-0"	9'-8"	14'-3"	18'-10"	4'-4"	8'-4"	12'-4"	16'-4"	10	4'-9"	6"	2'-6"	2'-9"	8'-3"	9	4'-9"	6"	2'-6"	2'-9"	8'-3"

CULVERT SIZE (FEET)	TABLE OF REINFORCING STEEL FOR ONE END				
	2 W(E) BARS		2 W_1(E) BARS		Y(E) BARS 8-#5
	30° WALL		0° WALL		
S X H	SIZE	LENGTH	SIZE	LENGTH	LENGTH
3 x 2	#5	11'-6"	#5	10'-4"	3'-11"
3 x 3	#5	16'-2"	#5	14'-5"	3'-11"
4 x 2	#5	11'-6"	#5	10'-4"	4'-11"
4 x 3	#5	16'-2"	#5	14'-5"	4'-11"
4 x 4	#6	20'-11"	#6	18'-7"	4'-11"
5 x 2	#5	11'-6"	#5	10'-4"	6'-0"
5 x 3	#5	16'-2"	#5	14'-5"	6'-0"
5 x 4	#6	20'-11"	#6	18'-7"	6'-0"
6 x 3	#5	16'-2"	#5	14'-5"	7'-0"
6 x 4	#6	20'-11"	#6	18'-7"	7'-0"
7 x 3	#5	16'-2"	#5	14'-5"	8'-1"
7 x 4	#6	20'-11"	#6	18'-7"	8'-1"
8 x 4	#6	20'-11"	#6	18'-7"	9'-1"

TOTAL QUANTITIES ONE END		
CONC.	REINF. BARS	PIPE RUNNERS
CU. YD.	LB.	FT.
3.2	395	36.09
4.9	537	53.08
3.6	426	36.09
5.3	573	53.08
7.4	781	81.17
3.9	446	36.09
5.7	610	53.08
7.9	823	81.17
6.2	635	68.75
8.4	854	101.08
6.8	676	68.75
9.3	903	101.08
10.2	950	121.00

NOTE:

REINFORCEMENT BARS BENDING DIMENSIONS ARE OUT TO OUT.

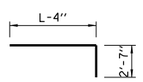

P(E) BARS

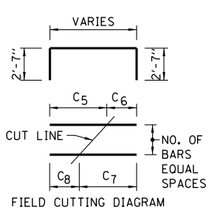

P1(E) BARS

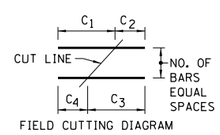

Q(E) BARS

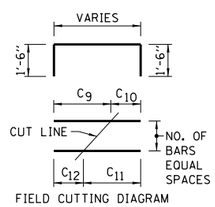

V(E) AND V1(E) BARS

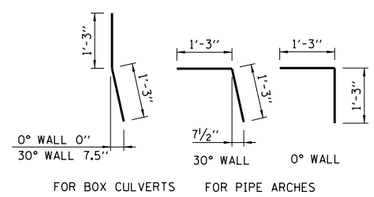

H(E) DOWELS

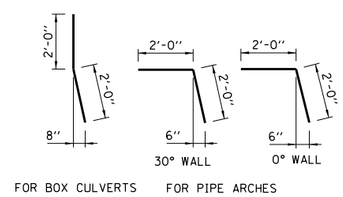

J(E) DOWELS

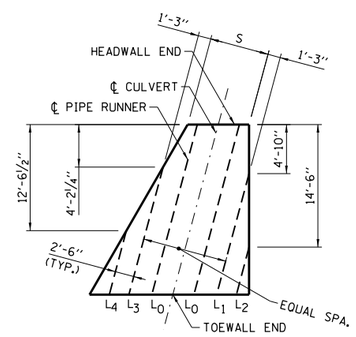

PIPE RUNNER LAYOUT

PIPE ARCH AND ELLIPTICAL PIPE CULVERTS

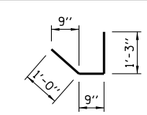

T1(E) BARS

FOR PIPE OR ELLIPTICAL PIPE CULVERTS SELECT APPROPRIATE "S" & "H" FROM SIZES SHOWN. ADD THE FOLLOWING ADDITIONAL BARS:
(a) 1 ADDITIONAL Y(E) BAR
(b) #4-T1 BARS @ APPROX. 12" CTS. (NO. = S + 2)

THE WEIGHT OF THE ADDITIONAL BARS AND THE ADDITIONAL QUANTITY OF CONCRETE IN THE HEADWALL SHALL BE ADDED TO THE QUANTITIES SHOWN.

SHEET 2 OF 2

Illinois Tollway

SAFETY END TREATMENT
FOR SINGLE CULVERTS
15° SKEW 1:4
SLOPE H ≤ 4'

STANDARD B15-04

Paul Kovacs
APPROVED CHIEF ENGINEER
DATE 6-1-2009

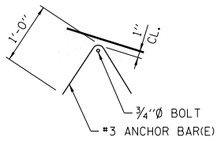

ANCHOR BARS

CONTRACTOR SHALL PROVIDE 2-#3 ANCHOR BARS(E) PER SIDEWALL BOLT.

DETAIL B

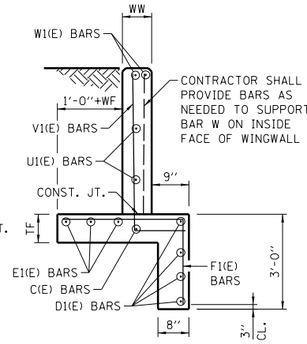

SECTION A-A

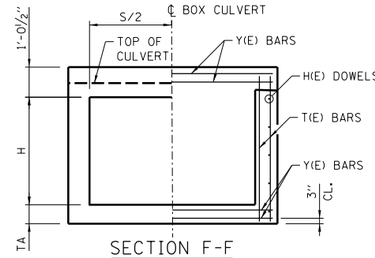

SECTION F-F

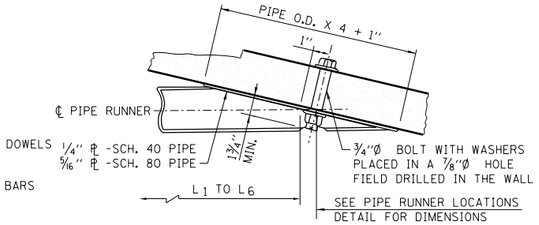

SECTION AT WING

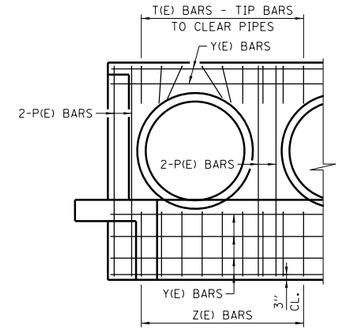

SECTION C-C

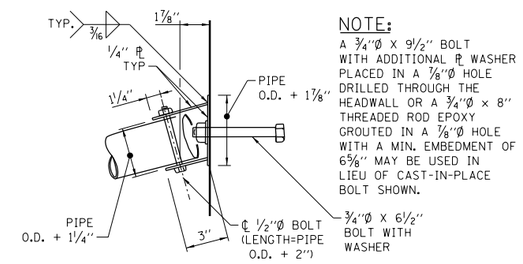

NOTE:

A 3/4"Ø X 9 1/2" BOLT WITH ADDITIONAL PL WASHER PLACED IN A 7/8"Ø HOLE DRILLED THROUGH THE HEADWALL OR A 3/4"Ø X 8" THREADED ROD EPOXY GROUTED IN A 7/8"Ø HOLE WITH A MIN. EMBEDMENT OF 6 5/8" MAY BE USED IN LIEU OF CAST-IN-PLACE BOLT SHOWN.

PLAN AT HEADWALL

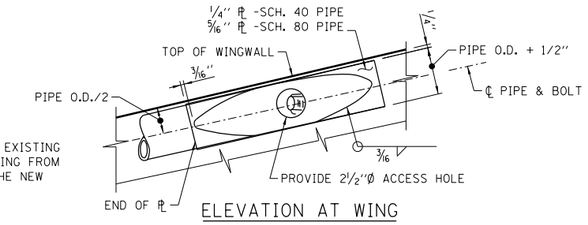

ELEVATION AT WING

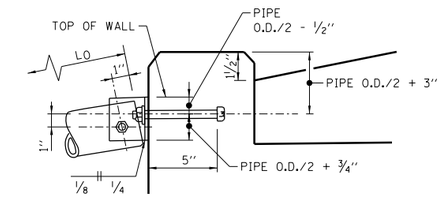

ELEVATION AT HEADWALL

NOTE:

J & H DOWEL BARS NOT REQUIRED WITH EXISTING BOX CULVERTS PROVIDING THE REINFORCING FROM THE EXISTING BOX IS EXTENDED INTO THE NEW CONCRETE A MINIMUM OF 1'-3".

NOTE:

PIPE O.D. IS THE PIPE RUNNER OUTSIDE DIAMETER.

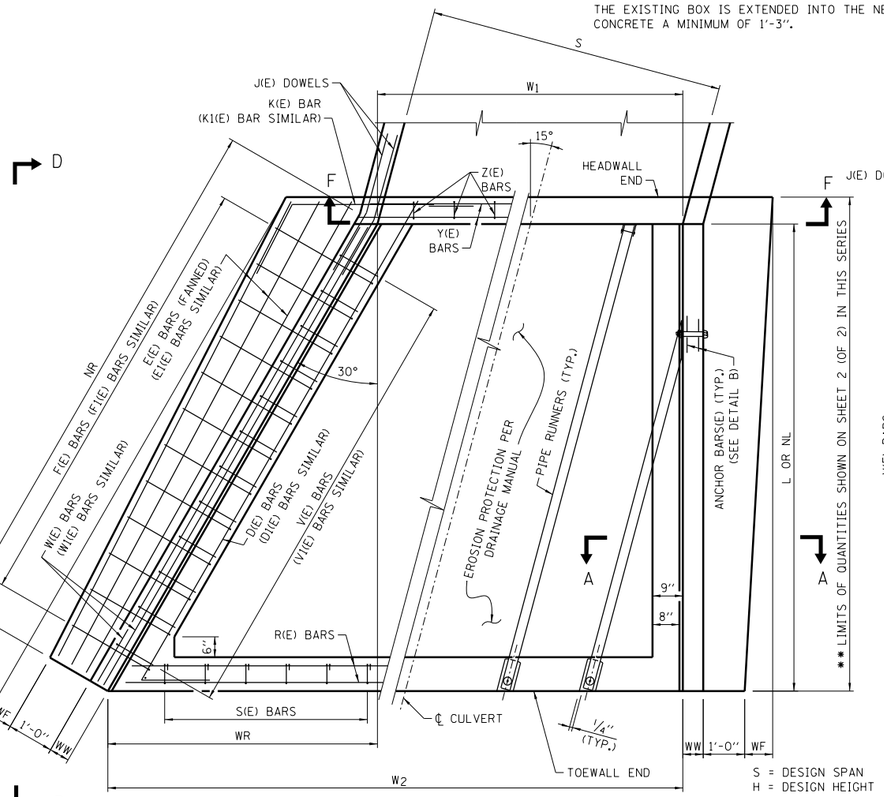

HALF PLAN SHOWING REINFORCEMENT BARS

HALF PLAN SHOWING DIMENSIONS

** DOWEL BARS EXTENDING INTO THE CONCRETE BOX CULVERT ARE INCLUDED IN THE QUANTITIES.

S = DESIGN SPAN
H = DESIGN HEIGHT

FOR BOX CULVERTS

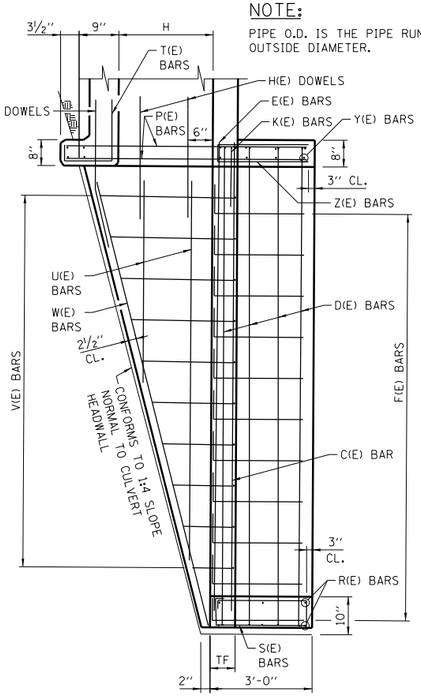

SECTION D-D

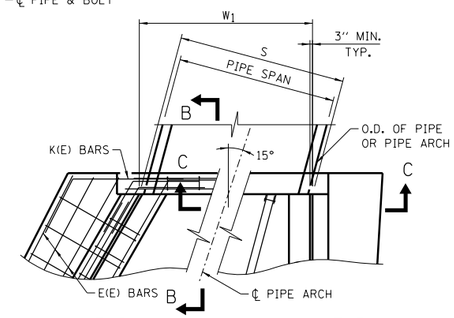

HALF PLAN SHOWING REINFORCEMENT BARS

HALF PLAN SHOWING DIMENSIONS

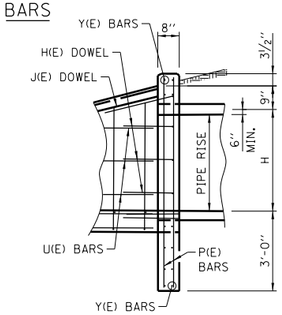

SECTION B-B

FOR PIPE AND PIPE-ARCH CULVERTS

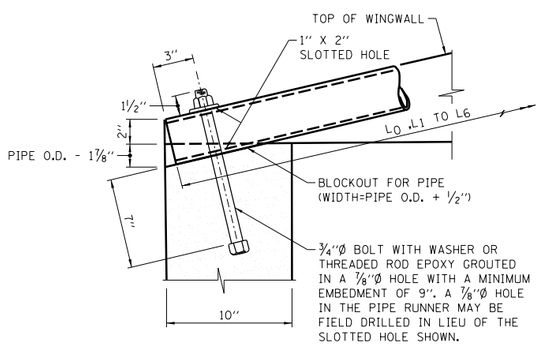

SECTION THRU TOEWALL

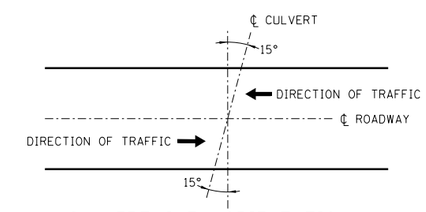

CULVERT SKEW ORIENTATION

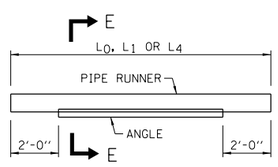

DETAIL A

*NOTE:

WHERE L_0, L_1 OR L_4 EXCEEDS THE FOLLOWING LENGTH, THE PIPE RUNNER SHALL BE STRENGTHENED OVER THE MIDSPAN AS SHOWN.

PIPE	LENGTH
3"Ø, SCH. 40	12'-8"
3 1/2"Ø, SCH. 40	17'-3"
3 1/2"Ø, SCH. 80	22'-1"
4"Ø, SCH. 40	22'-6"
4"Ø, SCH. 80	29'-4"

PIPE RUNNER DETAILS

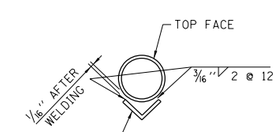

* L 2 X 2 X 3/8"-3"Ø PIPE
L 2 1/2 X 2 1/2 X 3/8-
3 1/2"Ø & 4"Ø PIPE
LENGTH = L_0, L_1 OR L_4
MINUS 4'-0" (SEE DETAIL A)

SECTION E-E

GENERAL NOTES:

1. ALL CONCRETE SHALL BE CLASS SI.
2. ALL EXPOSED CONCRETE EDGES SHALL HAVE A 3/4" x 45° CHAMFER. CHAMFER ON VERTICAL EDGES SHALL BE CONTINUED A MINIMUM OF ONE FOOT BELOW FINISHED GROUND LEVEL. COVER FROM THE FACE OF CONCRETE TO THE FACE OF REINFORCEMENT BARS SHALL BE 2", UNLESS OTHERWISE SHOWN.
3. CONCRETE QUANTITIES SHOWN ON SHEET 2 (OF 2) IN THIS SERIES ARE FOR REINFORCED CONCRETE BOX CULVERT SECTIONS AND ADDITIONAL CONCRETE REQUIRED IN HEADWALLS FOR PIPE OR ARCH CULVERT SECTIONS SHALL BE ADDED TO THESE QUANTITIES.
4. THIS STANDARD MAY BE USED FOR CULVERTS WITH SKEW OF 15° ± 7.5°. AS SHOWN PER CULVERT SKEW ORIENTATION ON THIS SHEET.
5. DESIGN: SAFETY PIPE RUNNERS ARE DESIGNED FOR A TRANSVERSING LOAD OF 1,800 POUNDS AT YIELD AS RECOMMENDED BY RESEARCH REPORT 280-1, SAFETY TREATMENT OF ROADSIDE CROSS DRAINAGE STRUCTURES, TEXAS TRANSPORTATION INSTITUTE, MARCH 1981.
6. ALL SLOPES ARE EXPRESSED AS UNITS OF VERTICAL DISPLACEMENT TO UNITS OF HORIZONTAL DISPLACEMENT (V:H).
7. FOR EROSION PROTECTION SEE STANDARD B19.
8. ALL REINFORCEMENT BARS SHALL BE EPOXY COATED (E).

APPROVED Paul Kovacs CHIEF ENGINEER DATE 6-1-2009

SHEET 1 OF 2

Illinois Tollway

DATE	REVISIONS
06-01-09	REVISED NOTES
03-01-10	MODIFIED CULVERT SKEW DETAIL, REVISED EROSION PROTECTION AND NOTES
02-07-12	TABLE QUANTITIES REVISED
03-31-14	TABLE QUANTITIES REVISED

SAFETY END TREATMENT FOR SINGLE CULVERTS AND MULTIPLE CULVERTS 15° SKEW, 1:4 SLOPE, H ≤ 8'

STANDARD B16-05

TABLE OF DIMENSIONS

S	H	L	NL	NR	WW	W_1 (4)	W_2 (4)	WR	WF	TF
9′	3′	14′-4″	14′-4″	16′-6⅝″	7″	9′-3¾″	17′-7″	8′-3¼″	3″	7″
9′	4′	18′-4″	18′-4″	21′-2″	7″	9′-3¾″	19′-10¾″	10′-7″	9″	8″
5′	5′	22′-4″	22′-4″	25′-9½″	7″	5′-2″	18′-0¾″	12′-10¾″	1′-3″	8″
6′	6′	26′-4″	26′-4″	30′-4⅞″	7″	6′-2½″	21′-5″	15′-2½″	1′-9″	8½″
7′	7′	30′-4″	30′-4″	35′-0¼″	7″	7′-3″	24′-9″	17′-6″	2′-3″	9″
8′	8′	34′-4″	34′-4″	39′-7¾″	8″	8′-3½″	28′-1¼″	19′-9¾″	2′-9″	9½″

PIPE RUNNERS FOR ONE END

H	SIZE (DIA.)	SCHEDULE	WINGWALL PIPES - ONE PER EACH LENGTH SHOWN: 0° WALL L_1	0° WALL L_2	0° WALL L_3	30° WALL L_4	30° WALL L_5	30° WALL L_6	HEADWALL PIPE S	NO.	L_O	TOTAL LENGTH
3′	3″	40	10′-0″	-	-	10′-8″	-	-	9′	4	15′-1″	81.00
4′	3″	40	14′-3″	-	-	14′-11″	6′-2″	-	9′	4	19′-4″	112.67
5′	3½″	40	18′-6″	8′-3″	-	19′-2″	10′-5″	-	5′	2	23′-7″	103.50
6′	3½″	80	22′-9″	12′-6″	-	23′-5″	14′-8″	5′-9″	6′	3	28′-0″	162.08
7′	4″	40	27′-0″	16′-9″	6′-7″	27′-8″	18′-11″	10′-0″	7′	3	32′-3″	203.67
8′	4″	80	31′-3″	21′-0″	10′-10″	31′-11″	23′-2″	14′-3″	8′	4	36′-6″	277.42

NOTE:

REINFORCEMENT BARS BENDING DIMENSIONS ARE OUT TO OUT.

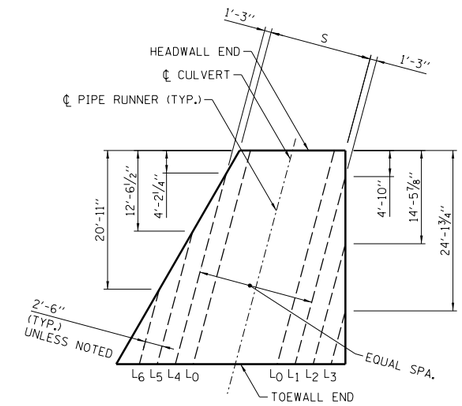

PIPE RUNNER LAYOUT

TABLE OF REINFORCEMENT BARS FOR ONE END

H	1-C(E) BAR 30° WALL SIZE	1-C(E) BAR 30° WALL LENGTH	1-C1(E) BAR 0° WALL SIZE	1-C1(E) BAR 0° WALL LENGTH	D(E) BAR 4-#4 30° WALL LENGTH	D1(E) BAR 4-#4 0° WALL LENGTH	#4-E(E) BARS 30° WALL (6) NO.	#4-E(E) BARS 30° WALL (6) LENGTH	#4-E1(E) BARS 0° WALL (6) NO.	#4-E1(E) BARS 0° WALL (6) LENGTH
3′	#4	16′-11″	#4	14′-8″	18′-10″	16′-7″	2	18′-4″	2	16′-2″
4′	#4	21′-7″	#4	18′-8″	23′-6″	20′-7″	2	23′-0″	2	20′-2″
5′	#4	22′-2″	#4	22′-8″	24′-1″	24′-7″	2	27′-7″	2	24′-2″
6′	#4	30′-9″	#4	26′-8″	32′-8″	28′-7″	3	32′-3″	3	28′-2″
7′	#5	35′-5″	#5	30′-8″	37′-4″	32′-7″	3	36′-10″	3	32′-2″
8′	#5	40′-0″	#5	34′-8″	41′-11″	36′-7″	3	41′-6″	3	36′-2″

S	H	TOTAL QUANTITIES ONE END MINIMUM "S" CONC. CU. YD.	TOTAL QUANTITIES ONE END MINIMUM "S" REINF. BARS POUND	INCREASE IN QUANTITIES FOR 1′ INCREASE IN "S" CONC. CU. YD.	INCREASE IN QUANTITIES FOR 1′ INCREASE IN "S" REINF. BARS POUND
9′	3′	8.4	890	0.20	30
9′	4′	12.7	1120	0.20	30
5′	5′	14.4	1200	0.20	30
6′	6′	20.1	1610	0.20	30
7′	7′	27.0	1930	0.20	30
8′	8′	36.0	2460	0.20	30

TABLE OF REINFORCEMENT BARS FOR ONE END

H	F(E) BARS EQUALLY SPACED 30° WALL SIZE	NO.	C_1	C_2	C_3	C_4	LENGTH	F1(E) BARS EQUALLY SPACED 0° WALL SIZE	NO.	C_1	C_2	C_3	C_4	LENGTH	H(E) DOWELS #5 @ 12″ 30° WALL NO.	LENGTH	H1(E) DOWELS #5 @ 12″ 0° WALL NO.	LENGTH	J(E) DOWELS 4-#6 (5) LENGTH
3′	#4	7	1′-11″	2′-1″	2′-0″	2′-0″	9′-2″	#4	7	1′-11″	2′-1″	2′-0″	2′-0″	9′-2″	3	3′-0″	3	3′-0″	4′-6″
4′	#4	9	1′-11″	2′-7″	2′-3″	2′-3″	9′-8″	#4	9	1′-11″	2′-7″	2′-3″	2′-3″	9′-8″	4	3′-0″	4	3′-0″	4′-6″
5′	#4	11	1′-11″	3′-1″	2′-6″	2′-6″	10′-2″	#4	11	1′-11″	3′-1″	2′-6″	2′-6″	10′-2″	5	3′-0″	5	3′-0″	4′-6″
6′	#5	13	1′-11″	3′-8″	2′-9″	2′-10″	10′-9″	#5	13	1′-11″	3′-6″	2′-8″	2′-9″	10′-7″	6	3′-0″	6	3′-0″	4′-6″
7′	#5	15	2′-0″	4′-3″	3′-1″	3′-2″	11′-5″	#5	15	2′-0″	4′-1″	3′-0″	3′-1″	11′-3″	7	3′-0″	7	3′-0″	4′-6″
8′	#6	18	2′-1″	4′-10″	3′-5″	3′-6″	12′-1″	#6	17	2′-1″	4′-8″	3′-4″	3′-5″	11′-11″	8	3′-0″	8	3′-0″	4′-6″

H	1-K(E) BAR 30° WALL SIZE	C_5	LENGTH	1-K1(E) BAR 0° WALL SIZE	C_6	LENGTH	2-W(E) BARS 30° WALL SIZE	LENGTH	2-W1(E) BARS 0° WALL SIZE	LENGTH
3′	#5	3′-11″	5′-5″	#5	3′-9″	5′-3″	#5	16′-9″	#5	14′-6″
4′	#5	4′-6″	6′-0″	#5	4′-3″	5′-9″	#6	21′-6″	#6	18′-7″
5′	#5	5′-1″	6′-7″	#5	4′-9″	6′-3″	#6	26′-3″	#6	22′-9″
6′	#5	5′-8″	7′-2″	#5	5′-3″	6′-9″	#6	31′-10″	#6	26′-11″
7′	#5	6′-3″	7′-9″	#5	5′-9″	7′-3″	#6	35′-9″	#6	31′-0″
8′	#5	6′-10″	8′-4″	#5	6′-3″	7′-9″	#6	40′-6″	#6	35′-2″

TABLE OF REINFORCEMENT BARS FOR ONE END

H	U(E) BARS - ONE PER EACH LENGTH SHOWN #4 @ 12″ 30° WALL C_7	C_8	C_9	C_{10}	C_{11}	C_{12}	C_{13}	C_{14}	U1(E) BARS - ONE PER EACH LENGTH SHOWN #4 @ 12″ 0° WALL C_7	C_8	C_9	C_{10}	C_{11}	C_{12}	C_{13}	C_{14}
3′	5′-1″	9′-8″	14′-3″	-	-	-	-	-	4′-4″	8′-4″	12′-4″	-	-	-	-	-
4′	5′-1″	9′-8″	14′-3″	18′-11″	-	-	-	-	4′-4″	8′-4″	12′-4″	16′-4″	-	-	-	-
5′	5′-1″	9′-8″	14′-3″	18′-11″	23′-6″	-	-	-	4′-4″	8′-4″	12′-4″	16′-4″	20′-4″	-	-	-
6′	5′-1″	9′-8″	14′-3″	18′-11″	23′-6″	28′-1″	-	-	4′-4″	8′-4″	12′-4″	16′-4″	20′-4″	24′-4″	-	-
7′	5′-1″	9′-8″	14′-3″	18′-11″	23′-6″	28′-1″	32′-9″	-	4′-4″	8′-4″	12′-4″	16′-4″	20′-4″	24′-4″	28′-4″	-
8′	5′-1″	9′-8″	14′-3″	18′-11″	23′-6″	28′-1″	32′-9″	37′-4″	4′-4″	8′-4″	12′-4″	16′-4″	20′-4″	24′-4″	28′-4″	32′-4″

H	V(E) BARS #4-EQUALLY SPACED 30° WALL NO.	C_{15}	C_{16}	C_{17}	C_{18}	C_{19}	LENGTH	V1(E) BARS #4-EQUALLY SPACED 0° WALL NO.	C_{15}	C_{16}	C_{17}	C_{18}	C_{19}	LENGTH
3′	8	3′-10″	9″	2′-2″	2′-5″	1′-0″	6′-7″	7	3′-10″	9″	2′-2″	2′-5″	1′-0″	6′-7″
4′	11	4′-11″	10″	2′-9″	3′-0″	1′-0″	7′-9″	9	4′-11″	10″	2′-9″	3′-0″	1′-0″	7′-9″
5′	13	5′-11″	10″	3′-3″	3′-6″	1′-0″	8′-9″	11	5′-11″	10″	3′-3″	3′-6″	1′-0″	8′-9″
6′	15	6′-11″	10″	3′-9″	4′-0″	1′-0″	9′-9″	13	6′-11″	10″	3′-9″	4′-0″	1′-0″	9′-9″
7′	17	8′-0″	11″	4′-4″	4′-7″	1′-0″	10′-11″	15	8′-0″	11″	4′-4″	4′-7″	1′-0″	10′-11″
8′	20	9′-0″	11″	4′-10″	5′-1″	1′-1″	12′-1″	17	9′-0″	11″	4′-10″	5′-1″	1′-1″	12′-1″

TABLE OF REINFORCEMENT BARS FOR MINIMUM "S" - ONE END

S	H	Y(E) BARS 12-#5 (2) LENGTH	R(E) BARS 6-#5 (2) LENGTH	Z(E) BARS #4 @ 12″ (1) NO.	Z(E) BARS #4 @ 12″ (1) LENGTH	S(E) BARS #4 @ 12″ (1) NO.	S(E) BARS #4 @ 12″ (1) LENGTH	T(E) BARS #4 @ 12″ (1) NO.	T(E) BARS #4 @ 12″ (1) LENGTH	P(E) BARS 8-#5 (3) LENGTH
≥9′	3′	10′-3″	17′-1″	10	5′-4″	16	6′-10″	10	3′-0″	6′-8″
≥9′	4′	10′-3″	19′-5″	10	5′-4″	18	6′-10″	10	3′-0″	7′-8″
≥5′	5′	6′-1″	17′-7″	6	5′-4″	16	6′-10″	6	3′-0″	8′-8″
≥6′	6′	7′-2″	20′-11″	7	5′-4″	20	6′-10″	7	3′-0″	9′-8″
≥7′	7′	8′-2″	24′-3″	8	5′-4″	23	6′-10″	8	3′-0″	10′-8″
≥8′	8′	9′-4″	27′-8″	9	5′-4″	26	6′-10″	9	3′-0″	11′-8″

NUMBER OF HEADWALL PIPE RUNNERS FOR 1 END S	NO.	S	NO.
10′	4	23′	10
11′	5	24′	10
12′	5	25′	10
13′	6	26′	11
14′	6	27′	11
15′	6	28′	12
16′	7	29′	12
17′	7	30′	12
18′	8	31′	13
19′	8	32′	13
20′	8	33′	14
21′	9	34′	14
22′	9	35′	14

NOTES FOR TABLES:

1. THE NUMBER OF S, T AND Z BARS SHALL BE INCREASED BY 1 FOR EACH 1 FOOT OF INCREASE IN DIMENSION "W_1".
2. THE LENGTH OF R AND Y BARS SHALL BE INCREASED BY 1′-1½″ FOR EACH 1 FOOT OF INCREASE IN DIMENSION "S".
3. THE NUMBER OF P BARS SHOWN ARE FOR SINGLE SPAN PIPES OR BOX CULVERTS. THIS NUMBER SHALL BE INCREASED BY 4 FOR EACH MULTIPLE OF PIPE OR BOX ADDED.
4. THIS DIMENSION SHALL BE INCREASED BY 1′-1½″ INCHES FOR EACH 1 FOOT INCREASE IN DIMENSION "S".
5. 2 BARS FOR 30° WALL, 2 BARS FOR 0° WALL.
6. THE LENGTH OF THIS BAR INCLUDES ONE 1′-6″ MINIMUM LAP.

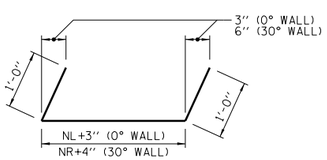

D(E) BARS

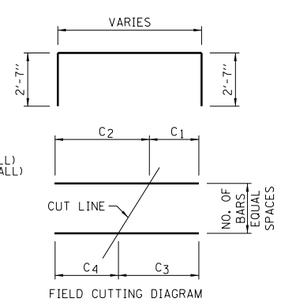

FIELD CUTTING DIAGRAM

F(E) AND F1(E) BARS

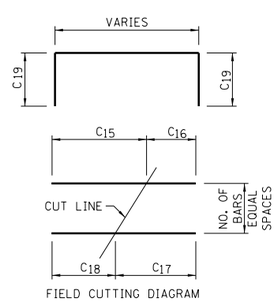

FIELD CUTTING DIAGRAM

V(E) AND V1(E) BARS

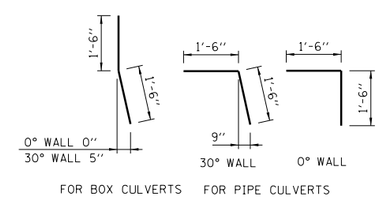

FOR BOX CULVERTS FOR PIPE CULVERTS

H(E) AND H1(E) DOWELS

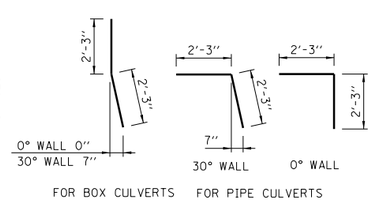

FOR BOX CULVERTS FOR PIPE CULVERTS

J(E) DOWELS

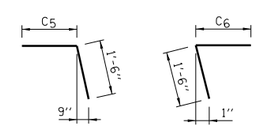

K(E) BARS K1(E) BARS

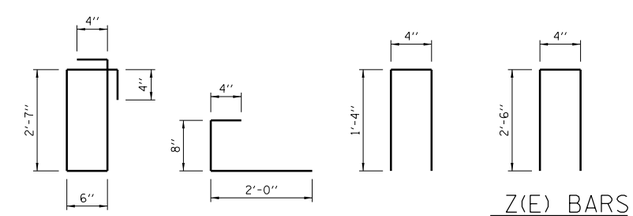

S(E) BARS

FOR BOX CULVERTS FOR PIPE CULVERTS

T(E) BARS

Z(E) BARS

SHEET 2 OF 2

Illinois Tollway

SAFETY END TREATMENT FOR SINGLE CULVERTS AND MULTIPLE CULVERTS 15° SKEW, 1:4 SLOPE, H ≤ 8′

STANDARD B16-05

Paul Kovacs
APPROVED CHIEF ENGINEER DATE 6-1-2009

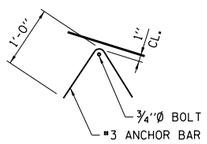

ANCHOR BARS(E)

CONTRACTOR SHALL PROVIDE 2-#3 ANCHOR BARS(E) PER SIDEWALL BOLT.

DETAIL B

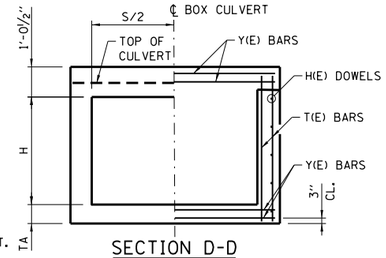

SECTION D-D

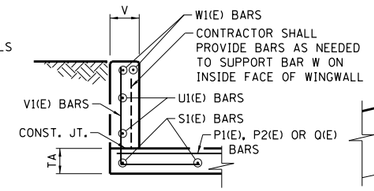

SECTION A-A

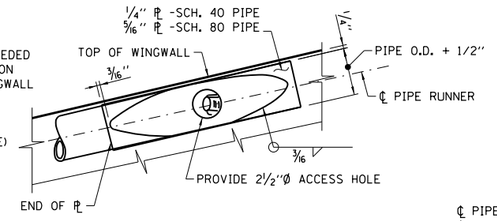

ELEVATION AT WING

NOTE:

PIPE O.D. IS THE PIPE RUNNER OUTSIDE DIAMETER.

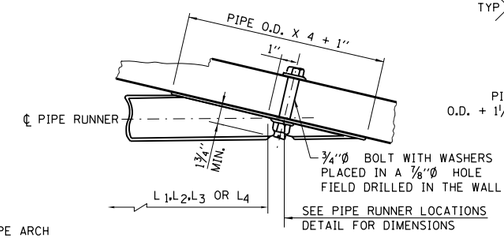

SECTION AT WING

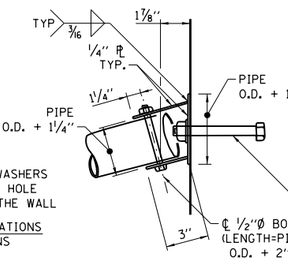

PLAN AT HEADWALL

NOTE:

A ¾"Ø X 9½" BOLT WITH ADDITIONAL ℙ WASHER PLACED IN A ⅞"Ø HOLE DRILLED THROUGH THE HEADWALL OR A ¾"Ø × 8" THREADED ROD EPOXY GROUTED IN A ⅞"Ø HOLE WITH A MIN. EMBEDMENT OF 6⅝" MAY BE USED IN LIEU OF CAST-IN-PLACE BOLT SHOWN.

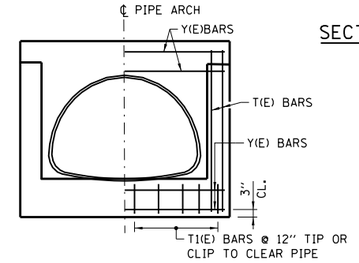

SECTION B-B

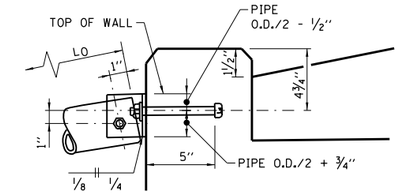

ELEVATION AT HEADWALL

NOTE:

Q(E), V(E), AND V_1(E) BARS ARE TO BE FIELD CUT PER CUTTING DIAGRAM. PLACE BARS WITH DIMENSIONS C_2-C_3, C_9-C_{12} BEGINNING AT HEADWALL AND BARS WITH DIMENSIONS C_1-C_4, C_{10}-C_{11} BEGINNING AT THE TOEWALL END.

NOTE:

P1(E) BARS ARE TO BE FIELD CUT PER CUTTING DIAGRAM. PLACE BARS WITH DIMENSIONS C_6-C_7 BEGINNING AT THE TOEWALL END OF 45° WINGWALL AND BARS WITH DIMENSIONS C_5 -C_8 BEGINNING PARALLEL TO THE P(E) BARS. PLACE P2(E) BARS PARALLEL TO THE P(E) BARS BEGINNING WITH THE SHORTEST BARS AT THE HEADWALL END OF THE 15° WINGWALL.

NOTE:

J(E) & H(E) DOWEL BARS NOT REQUIRED WITH EXISTING BOX CULVERTS PROVIDING THE REINFORCING FROM THE EXIST. BOX IS EXTENDED INTO THE NEW CONCRETE A MIN. OF 1'-3".

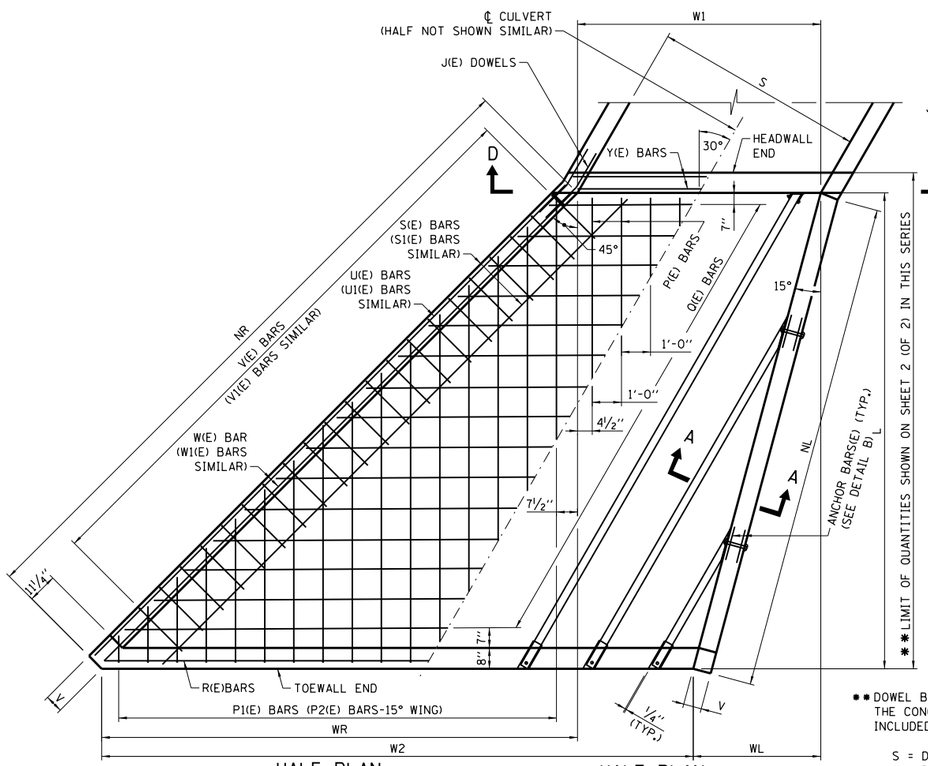

HALF PLAN SHOWING REINFORCIEMENT BARS

HALF PLAN SHOWING DIMENSIONS

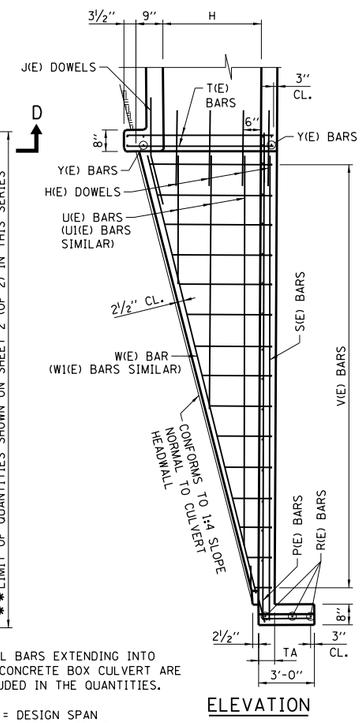

ELEVATION

** DOWEL BARS EXTENDING INTO THE CONCRETE BOX CULVERT ARE INCLUDED IN THE QUANTITIES.

S = DESIGN SPAN
H = DESIGN HEIGHT

BOX CULVERT DETAILS

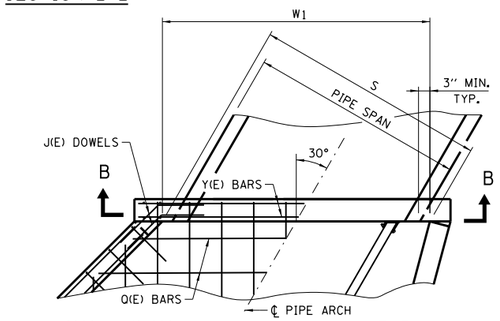

HALF PLAN SHOWING REINFORCEMENT BARS

HALF PLAN SHOWING DIMENSIONS

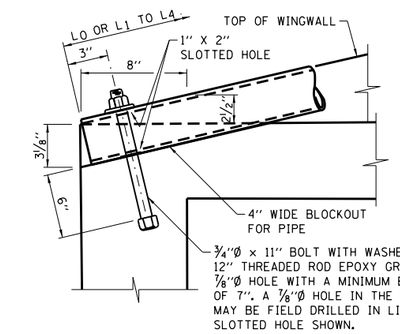

SECTION THRU TOEWALL

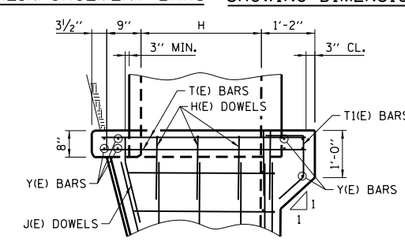

ELEVATION

PIPE ARCH DETAILS

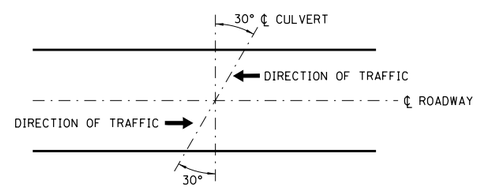

CULVERT SKEW ORIENTATION

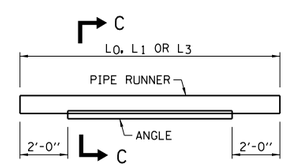

DETAIL A

* NOTE:

WHERE L_0, L_1 OR L_3 EXCEEDS THE FOLLOWING LENGTH, THE PIPE RUNNER SHALL BE STRENGTHENED OVER THE MIDSPAN AS SHOWN.

PIPE	LENGTH
3"Ø, SCH. 40	12'-8"
3"Ø, SCH. 80	15'-4"

PIPE RUNNER DETAILS

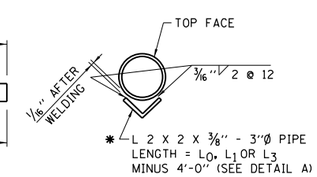

SECTION C-C

SHEET 1 OF 2

GENERAL NOTES:

1. ALL CONCRETE SHALL BE CLASS SI.
2. ALL EXPOSED CONCRETE EDGES SHALL HAVE A ¾" × 45° CHAMFER. CHAMFER ON VERTICAL EDGES SHALL BE CONTINUED A MINIMUM OF ONE FOOT BELOW FINISHED GROUND LEVEL. COVER FROM THE FACE OF CONCRETE TO THE FACE OF REINFORCEMENT BARS SHALL BE 2". UNLESS OTHERWISE SHOWN.
3. CONCRETE QUANTITIES SHOWN ON SHEET 2 (OF 2) IN THIS SERIES ARE FOR REINFORCED CONCRETE BOX CULVERT SECTIONS AND ADDITIONAL CONCRETE REQUIRED IN HEADWALLS FOR PIPE OR ARCH CULVERT SECTIONS SHALL BE ADDED TO THESE QUANTITIES.
4. THIS STANDARD MAY BE USED FOR CULVERTS WITH SKEW OF 30° ± 7.5°. AS SHOWN PER CULVERT SKEW ORIENTATION ON THIS SHEET.
5. DESIGN: SAFETY PIPE RUNNERS ARE DESIGNED FOR A TRANSVERSING LOAD OF 1,800 POUNDS AT YIELD AS RECOMMENDED BY RESEARCH REPORT 280-1, SAFETY
5. TREATMENT OF ROADSIDE CROSS DRAINAGE STRUCTURES, TEXAS TRANSPORTATION INSTITUTE, MARCH 1981.
6. ALL SLOPES ARE EXPRESSED AS UNITS OF VERTICAL DISPLACEMENT TO UNITS OF HORIZONTAL DISPLACEMENT (V:H).
7. FOR EROSION PROTECTION SEE STANDARD B19.
8. ALL REINFORCEMENT BARS SHALL BE EPOXY COATED (E).

APPROVED Paul Kovacs CHIEF ENGINEER DATE 6-1-2009

DATE	REVISIONS
6-01-2009	REVISED NOTES
3-01-2010	MODIFIED CULVERT SKEW DETAIL, REVISED EROSION PROTECTION AND NOTES
2-07-2012	TABLE QUANTITIES REVISED
3-11-2015	REVISED NOTES

Illinois Tollway

SAFETY END TREATMENT FOR SINGLE CULVERTS 30° SKEW 1:4 SLOPE H ≤ 4'

STANDARD B17-04

CULVERT SIZE (FEET)	TABLE OF DIMENSIONS								
S X H	L	NL	NR	V	W_1	W_2	WL	WR	TA
3 x 2	10'-10"	11'-2 5/8"	15'-3 7/8"	7"	3'-5 5/8"	11'-4 3/4"	2'-10 7/8"	10'-10"	6"
3 x 3	14'-10"	15'-4 1/4"	20'-11 3/4"	7"	3'-5 5/8"	14'-3 7/8"	3'-11 3/4"	14'-10"	6"
4 x 2	10'-10"	11'-2 5/8"	15'-3 7/8"	7"	4'-7 3/8"	12'-6 1/2"	2'-10 7/8"	10'-10"	6"
4 x 3	14'-10"	15'-4 1/4"	20'-11 3/4"	7"	4'-7 3/8"	15'-5 5/8"	3'-11 3/4"	14'-10"	6"
4 x 4	18'-10"	19'-6"	26'-7 5/8"	7"	4'-7 3/8"	18'-4 7/8"	5'-0 1/2"	18'-10"	6"
5 x 2	10'-10"	11'-2 5/8"	15'-3 7/8"	7"	5'-9 1/4"	13'-8 3/8"	2'-10 7/8"	10'-10"	6"
5 x 3	14'-10"	15'-4 1/4"	20'-11 3/4"	7"	5'-9 1/4"	16'-7 1/2"	3'-11 3/4"	14'-10"	6"
5 x 4	18'-10"	19'-6"	26'-7 5/8"	7"	5'-9 1/4"	19'-6 3/4"	5'-0 1/2"	18'-10"	6"
6 x 3	14'-10"	15'-4 1/4"	20'-11 3/4"	7"	6'-11 1/8"	17'-9 3/8"	3'-11 3/4"	14'-10"	6"
6 x 4	18'-10"	19'-6"	26'-7 5/8"	7"	6'-11 1/8"	20'-8 5/8"	5'-0 1/2"	18'-10"	6"
7 x 3	14'-10"	15'-4 1/4"	20'-11 3/4"	7"	8'-1"	18'-11 1/4"	3'-11 3/4"	14'-10"	6 1/2"
7 x 4	18'-10"	19'-6"	26'-7 5/8"	7"	8'-1"	21'-10 1/2"	5'-0 1/2"	18'-10"	6 1/2"
8 x 4	18'-10"	19'-6"	26'-7 5/8"	7"	9'-2 7/8"	23'-0 3/8"	5'-0 1/2"	18'-10"	7"

SCHEDULE	PIPE RUNNERS FOR ONE END SIZE 3" DIA.					
	HEADWALL PIPE		WINGWALL PIPE-ONE PER EACH LENGTH SHOWN			
			15° WALL		45° WALL	
	NO.	L_0	L_1	L_2	L_3	L_4
40	2	12'-10"	7'-10"	-	9'-2"	-
40	2	17'-8"	12'-6"	-	13'-11"	6'-7"
40	2	12'-10"	7'-10"	-	9'-2"	-
40	2	17'-8"	12'-6"	-	13'-11"	6'-7"
80	2	22'-4"	17'-3"	7'-4"	18'-7"	11'-4"
40	3	12'-10"	7'-10"	-	9'-2"	-
40	3	17'-8"	12'-6"	-	13'-11"	6'-7"
80	3	22'-4"	17'-3"	7'-4"	18'-7"	11'-4"
40	3	17'-8"	12'-6"	-	13'-11"	6'-7"
80	3	22'-4"	17'-3"	7'-4"	18'-7"	11'-4"
40	4	17'-8"	12'-6"	-	13'-11"	6'-7"
80	4	22'-4"	17'-3"	7'-4"	18'-7"	11'-4"
80	4	22'-4"	17'-3"	7'-4"	18'-7"	11'-4"

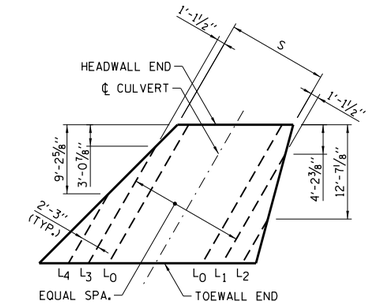

PIPE RUNNER LAYOUT

CULVERT SIZE (FEET)	TABLE OF REINFORCEMENT BARS FOR ONE END																													
	H(E) DOWELS #4 @ 12" 2'-6" LG.		J(E) DOWELS #4 @ 12" 4'-0" LG.		P(E) BARS #4 @ 12"		P1(E) BARS #4 @ 12"						P2(E) BARS - ONE PER EACH LENGTH SHOWN #4 @ 12"					O(E) BARS #4 @ 12"						R(E) BARS 3-#4	S(E) BARS 45° WALL 2-#4	S1(E) BARS 15° WALL 2-#4	U(E) BARS- ONE PER EACH LENGTH SHOWN #4 @ 12"			
													LENGTH														45° WALL			
S X H	NO.*	NO.**	NO.*	NO.**	NO.	LENGTH	NO.	C_5	C_6	C_7	C_8	LENGTH	a_1	a_2	a_3	a_4	a_5	NO.	C_1	C_2	C_3	C_4	LENGTH	LENGTH	LENGTH	LENGTH	a_6	a_7	a_8	a_9
3 x 2	3	3	2	2	1	13'-1"	5	10'-6"	1'-6"	5'-6"	6'-6"	17'-2"	5'-4"	9'-1"	-	-	-	5	11'-6"	4'-11"	7'-10"	8'-7"	16'-5"	11'-10"	14'-10"	11'-0"	6'-2"	11'-10"	-	-
3 x 3	4	4	2	2	0	-	7	14'-6"	1'-6"	7'-6"	8'-6"	21'-2"	5'-4"	9'-1"	12'-10"	-	-	7	14'-5"	4'-11"	9'-4"	10'-0"	19'-4"	14'-9"	20'-6"	15'-2"	6'-2"	11'-10"	17'-6"	-
4 x 2	3	3	2	2	2	13'-1"	5	10'-6"	1'-6"	5'-6"	6'-6"	17'-2"	2'-3"	6'-0"	9'-9"	-	-	5	12'-8"	6'-1"	9'-0"	9'-9"	18'-9"	13'-0"	14'-10"	11'-0"	6'-2"	11'-10"	-	-
4 x 3	4	4	2	2	1	17'-1"	7	14'-6"	1'-6"	7'-6"	8'-6"	21'-2"	2'-3"	6'-0"	9'-9"	13'-6"	-	7	15'-7"	6'-1"	10'-6"	11'-2"	21'-8"	15'-11"	20'-6"	15'-2"	6'-2"	11'-10"	17'-6"	-
4 x 4	5	5	2	2	0	-	9	18'-6"	1'-6"	9'-6"	10'-6"	25'-2"	2'-3"	6'-0"	9'-9"	13'-6"	17'-3"	9	18'-6"	6'-1"	11'-11"	12'-8"	24'-7"	18'-10"	26'-2"	19'-4"	6'-2"	11'-10"	17'-6"	23'-1"
5 x 2	3	3	2	2	3	13'-1"	5	10'-6"	1'-6"	5'-6"	6'-6"	17'-2"	2'-10"	6'-7"	10'-4"	-	-	5	13'-10"	7'-3"	10'-2"	10'-11"	21'-1"	14'-2"	14'-10"	11'-0"	6'-2"	11'-10"	-	-
5 x 3	4	4	2	2	2	17'-1"	7	14'-6"	1'-6"	7'-6"	8'-6"	21'-2"	2'-10"	6'-7"	10'-4"	14'-0"	-	7	16'-9"	7'-3"	11'-8"	12'-4"	24'-0"	17'-1"	20'-6"	15'-2"	6'-2"	11'-10"	17'-6"	-
5 x 4	5	5	2	2	1	21'-1"	9	18'-6"	1'-6"	9'-6"	10'-6"	25'-2"	2'-10"	6'-7"	10'-4"	14'-0"	17'-9"	9	19'-8"	7'-3"	13'-1"	13'-10"	26'-11"	20'-0"	26'-2"	19'-4"	6'-2"	11'-10"	17'-6"	23'-1"
6 x 3	4	4	2	2	3	17'-1"	7	14'-6"	1'-6"	7'-6"	8'-6"	21'-2"	3'-4"	7'-1"	10'-10"	14'-7"	-	7	17'-11"	8'-4"	12'-9"	13'-6"	26'-3"	18'-3"	20'-6"	15'-2"	6'-2"	11'-10"	17'-6"	-
6 x 4	5	5	2	2	2	21'-1"	9	18'-6"	1'-6"	9'-6"	10'-6"	25'-2"	3'-4"	7'-1"	10'-10"	14'-7"	18'-3"	9	20'-10"	8'-4"	14'-3"	14'-11"	29'-2"	21'-2"	26'-2"	19'-4"	6'-2"	11'-10"	17'-6"	23'-1"
7 x 3	4	4	2	2	4	17'-1"	7	14'-6"	1'-6"	7'-6"	8'-6"	21'-2"	4'-0"	7'-9"	11'-5"	15'-2"	-	7	19'-1"	9'-6"	13'-11"	14'-8"	28'-7"	19'-5"	20'-6"	15'-2"	6'-2"	11'-10"	17'-6"	-
7 x 4	5	5	2	2	3	21'-1"	9	18'-6"	1'-6"	9'-6"	10'-6"	25'-2"	4'-0"	7'-9"	11'-5"	15'-2"	18'-6"	9	22'-0"	9'-6"	15'-5"	16'-1"	31'-6"	22'-4"	26'-2"	19'-4"	6'-2"	11'-10"	17'-6"	23'-1"
8 x 4	5	5	2	2	5	21'-1"	9	18'-6"	1'-6"	9'-6"	10'-6"	25'-2"	4'-6"	8'-3"	12'-0"	15'-9"	-	9	23'-1"	10'-8"	16'-6"	17'-3"	33'-9"	23'-6"	26'-2"	19'-4"	6'-2"	11'-10"	17'-6"	23'-1"

CULVERT SIZE (FEET)	TABLE OF REINFORCEMENT BARS FOR ONE END																						
	U1(E) BARS- ONE PER EACH LENGTH SHOWN #4 @ 12"				V(E) BARS #4 @ 12"						V1(E) BARS #4 @ 12"						2 W(E) BARS 45° WALL		2 W1(E) BARS 15° WALL		Y(E) BARS 8-#5	T(E) BARS 8-#5 BOX CULVERT	T(E) BARS 8-#5 PIPE ARCH
	15° WALL				45° WALL						15° WALL												
S X H	a_{10}	a_{11}	a_{12}	a_{13}	No.	C_9	C_{10}	C_{11}	C_{12}	LENGTH	No.	C_9	C_{10}	C_{11}	C_{12}	LENGTH	SIZE	LENGTH	SIZE	LENGTH	LENGTH	LENGTH	LENGTH
3 x 2	4'-6"	8'-7"	-	-	7	2'-9"	6"	1'-6"	1'-9"	6'-3"	5	2'-9"	6"	1'-6"	1'-9"	6'-3"	#5	14'-5"	#5	10'-8"	4'-4"	3'-2"	3'-8"
3 x 3	4'-6"	8'-7"	12'-9"	-	10	3'-9"	6"	2'-0"	2'-3"	7'-3"	7	3'-9"	6"	2'-0"	2'-3"	7'-3"	#5	20'-2"	#5	14'-11"	4'-4"	4'-2"	4'-8"
4 x 2	4'-6"	8'-7"	-	-	7	2'-9"	6"	1'-6"	1'-9"	6'-3"	5	2'-9"	6"	1'-6"	1'-9"	6'-3"	#5	14'-5"	#5	10'-8"	5'-6"	3'-2"	3'-8"
4 x 3	4'-6"	8'-7"	12'-9"	-	10	3'-9"	6"	2'-0"	2'-3"	7'-3"	7	3'-9"	6"	2'-0"	2'-3"	7'-3"	#5	20'-2"	#5	14'-11"	5'-6"	4'-2"	4'-8"
4 x 4	4'-6"	8'-7"	12'-9"	16'-11"	13	4'-9"	6"	2'-6"	2'-9"	8'-3"	9	4'-9"	6"	2'-6"	2'-9"	8'-3"	#6	25'-11"	#6	19'-1"	5'-6"	5'-2"	5'-8"
5 x 2	4'-6"	8'-7"	-	-	7	2'-9"	6"	1'-6"	1'-9"	6'-3"	5	2'-9"	6"	1'-6"	1'-9"	6'-3"	#5	14'-5"	#5	10'-8"	6'-8"	3'-2"	3'-8"
5 x 3	4'-6"	8'-7"	12'-9"	-	10	3'-9"	6"	2'-0"	2'-3"	7'-3"	7	3'-9"	6"	2'-0"	2'-3"	7'-3"	#5	20'-2"	#5	14'-11"	6'-8"	4'-2"	4'-8"
5 x 4	4'-6"	8'-7"	12'-9"	16'-11"	13	4'-9"	6"	2'-6"	2'-9"	8'-3"	9	4'-9"	6"	2'-6"	2'-9"	8'-3"	#6	25'-11"	#6	19'-1"	6'-8"	5'-2"	5'-8"
6 x 3	4'-6"	8'-7"	12'-9"	-	10	3'-9"	6"	2'-0"	2'-3"	7'-3"	7	3'-9"	6"	2'-0"	2'-3"	7'-3"	#5	20'-2"	#5	14'-11"	7'-10"	4'-2"	4'-8"
6 x 4	4'-6"	8'-7"	12'-9"	16'-11"	13	4'-9"	6"	2'-6"	2'-9"	8'-3"	9	4'-9"	6"	2'-6"	2'-9"	8'-3"	#6	25'-11"	#6	19'-1"	7'-10"	5'-2"	5'-8"
7 x 3	4'-6"	8'-7"	12'-9"	-	10	3'-9"	6"	2'-0"	2'-3"	7'-3"	7	3'-9"	6"	2'-0"	2'-3"	7'-3"	#5	20'-2"	#5	14'-11"	9'-0"	4'-2"	4'-8"
7 x 4	4'-6"	8'-7"	12'-9"	16'-11"	13	4'-9"	6"	2'-6"	2'-9"	8'-3"	9	4'-9"	6"	2'-6"	2'-9"	8'-3"	#6	25'-11"	#6	19'-1"	9'-0"	5'-2"	5'-8"
8 x 4	4'-6"	8'-7"	12'-9"	16'-11"	13	4'-9"	6"	2'-6"	2'-9"	8'-3"	9	4'-9"	6"	2'-6"	2'-9"	8'-3"	#6	25'-11"	#6	19'-1"	10'-2"	5'-2"	5'-8"

TOTAL QUANTITIES ONE END		
CONC.	REINF. BARS	PIPE RUNNERS
CU. YD.	LB.	FT.
3.8	396	41.67
5.8	580	67.17
4.2	430	41.67
6.3	617	67.17
8.8	874	97.83
4.6	460	54.17
6.8	653	84.42
9.4	915	119.83
7.3	688	84.42
9.9	957	119.83
8.0	724	101.67
10.9	999	141.84
12.0	1042	141.84

NOTE:

REINFORCEMENT BARS BENDING DIMENSIONS ARE OUT TO OUT.

* 45° WALL

** 15° WALL

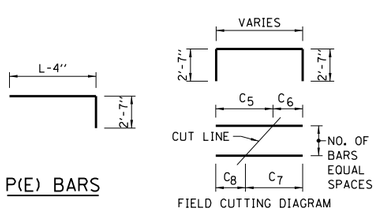

P(E) BARS

P1(E) BARS

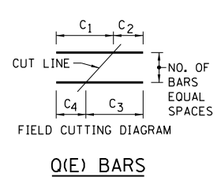

O(E) BARS

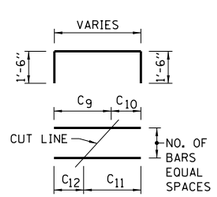

V(E) AND V1(E) BARS

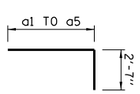

P2(E) BARS

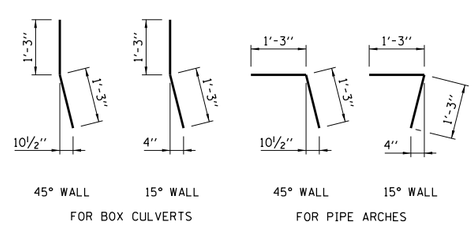

H(E) DOWELS

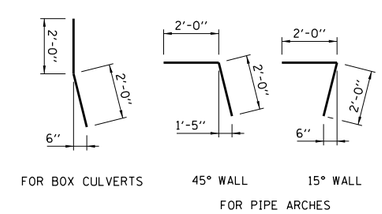

J(E) DOWELS

PIPE ARCH AND ELLIPTICAL PIPE CULVERTS

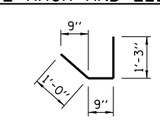

T1(E) BARS

FOR PIPE OR ELLIPTICAL PIPE CULVERTS SELECT APPROPRIATE "S" & "H" FROM SIZES SHOWN. ADD THE FOLLOWING ADDITIONAL BARS:
(a) 1 ADDITIONAL Y(E) BAR
(b) #4-T1 BARS @ APPROX. 12" CTS. (NO. = S + 2)

THE WEIGHT OF THE ADDITIONAL BARS AND THE ADDITIONAL QUANTITY OF CONCRETE IN THE HEADWALL SHALL BE ADDED TO THE QUANTITIES SHOWN.

SHEET 2 OF 2

Illinois Tollway

SAFETY END TREATMENT
FOR SINGLE CULVERTS
30° SKEW 1:4
SLOPE H ≤ 4'

STANDARD B17-04

Paul Kovacs
APPROVED CHIEF ENGINEER
DATE 6-1-2009

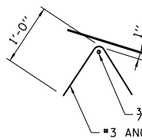

ANCHOR BARS(E)

CONTRACTOR SHALL PROVIDE 2-#3 ANCHOR BARS(E) PER SIDEWALL BOLT.

DETAIL B

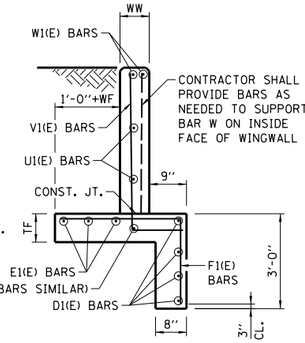

SECTION A-A

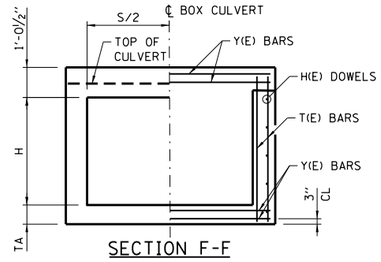

SECTION F-F

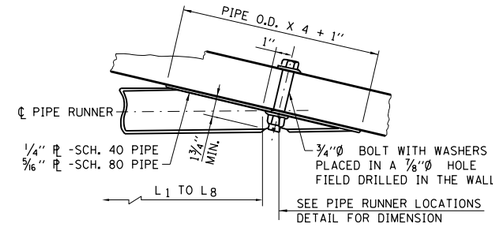

SECTION AT WING

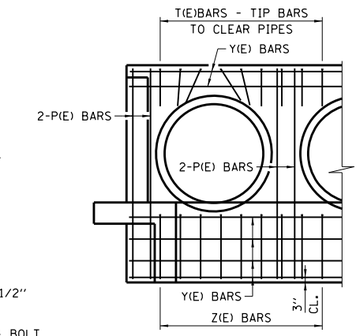

SECTION C-C

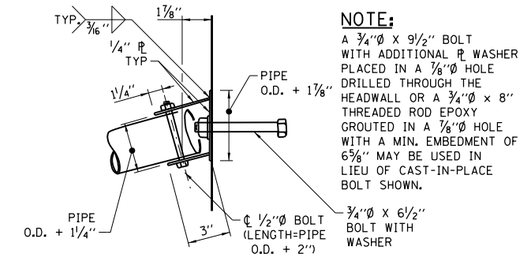

NOTE:

A ¾"Ø X 9½" BOLT WITH ADDITIONAL PL WASHER PLACED IN A ⅞"Ø HOLE DRILLED THROUGH THE HEADWALL OR A ¾"Ø X 8" THREADED ROD EPOXY GROUTED IN A ⅞"Ø HOLE WITH A MIN. EMBEDMENT OF 6⅝" MAY BE USED IN LIEU OF CAST-IN-PLACE BOLT SHOWN.

PLAN AT HEADWALL

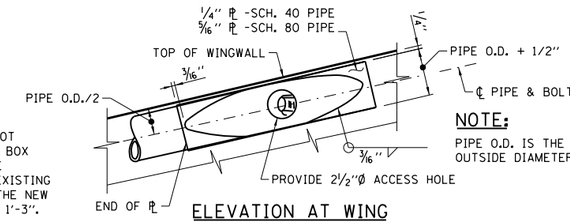

ELEVATION AT WING

NOTE:

PIPE O.D. IS THE PIPE RUNNER OUTSIDE DIAMETER.

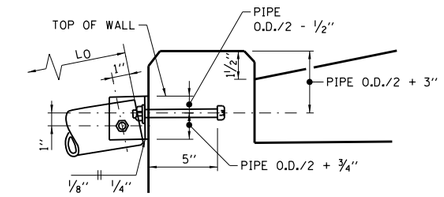

ELEVATION AT HEADWALL

NOTE:

F(E), F1(E), V(E) & V1(E) BARS ARE TO BE FIELD CUT PER CUTTING DIAGRAM. PLACE BARS WITH DIMENSIONS C_2-C_4, C_{15}-C_{18} BEGINNING AT HEADWALL AND BARS WITH DIMENSIONS C_1-C_3, C_{16}-C_{17} BEGINNING AT THE TOEWALL END.

NOTE:

J(E) & H(E) DOWEL BAR NOT REQUIRED WITH EXISTING BOX CULVERTS PROVIDING THE REINFORCING FROM THE EXISTING BOX IS EXTENDED INTO THE NEW CONCRETE A MINIMUM OF 1'-3".

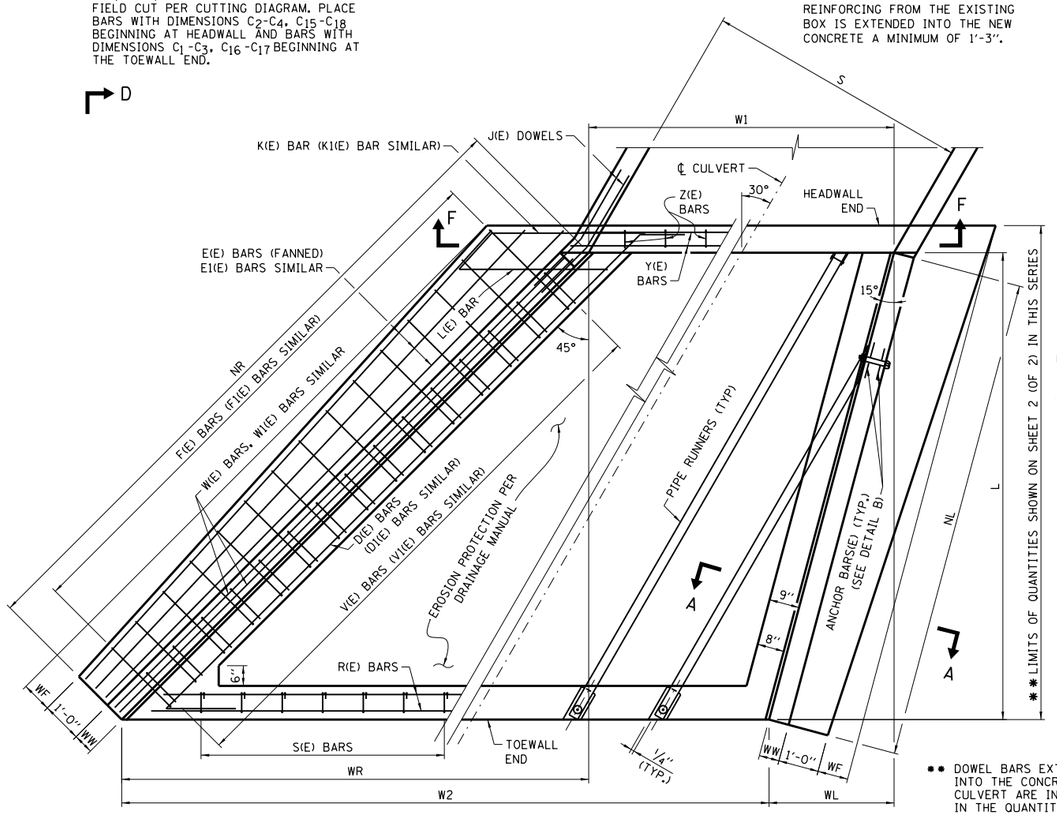

HALF PLAN SHOWING REINFORCEMENT BARS

HALF PLAN SHOWING DIMENSIONS

** DOWEL BARS EXTENDING INTO THE CONCRETE BOX CULVERT ARE INCLUDED IN THE QUANTITIES.

S = DESIGN SPAN
H = DESIGN HEIGHT

FOR BOX CULVERTS

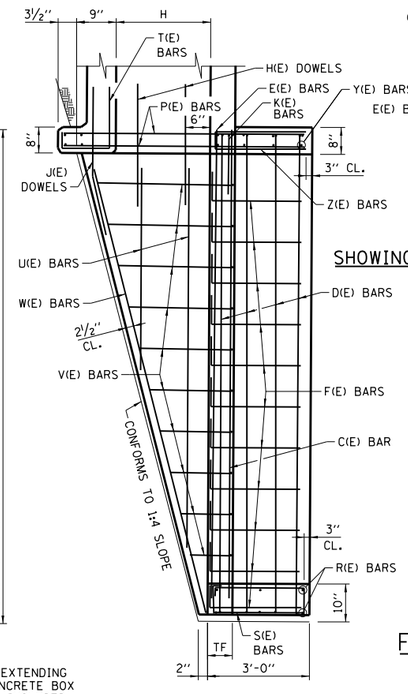

ELEVATION D-D

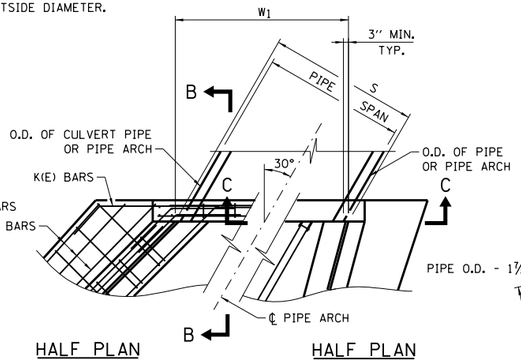

HALF PLAN SHOWING REINFORCEMENT BARS

HALF PLAN SHOWING DIMENSIONS

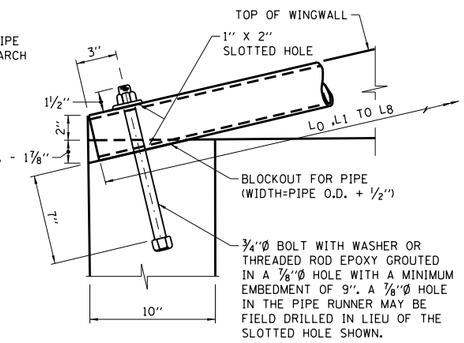

SECTION THRU TOEWALL

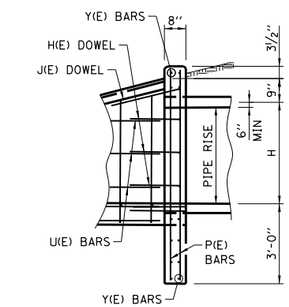

SECTION B-B

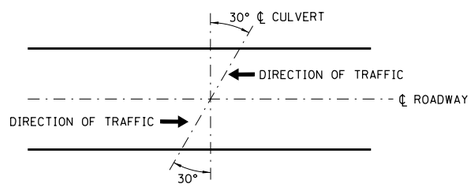

CULVERT SKEW ORIENTATION

FOR PIPE AND PIPE-ARCH CULVERTS

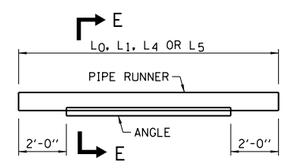

DETAIL A

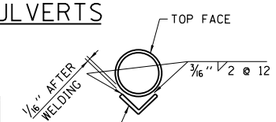

* L 2 X 2 X ⅜"-3"Ø PIPE
L 2½ x 2½ x ⅜-
3½"Ø & 4"Ø PIPE
LENGTH = LO, L1, L4 OR L5
MINUS 4'-0" (SEE DETAIL A)

SECTION E-E

*NOTE:

WHERE LO, L1, L4 OR L5 EXCEEDS THE FOLLOWING LENGTH, THE PIPE RUNNER SHALL BE STRENGTHENED OVER THE MIDSPAN AS SHOWN.

PIPE	LENGTH
3"Ø, SCH. 40	12'-8"
3"Ø, SCH. 80	15'-4"
3½"Ø, SCH. 80	22'-1"
4"Ø, SCH. 80	29'-4"

PIPE RUNNER DETAILS

SHEET 1 OF 2

GENERAL NOTES:

1. ALL CONCRETE SHALL BE CLASS SI.
2. ALL EXPOSED CONCRETE EDGES SHALL HAVE A ¾" x 45° CHAMFER. CHAMFER ON VERTICAL EDGES SHALL BE CONTINUED A MINIMUM OF ONE FOOT BELOW FINISHED GROUND LEVEL. COVER FROM THE FACE OF CONCRETE TO THE FACE OF REINFORCEMENT BARS SHALL BE 2", UNLESS OTHERWISE SHOWN.
3. CONCRETE QUANTITIES SHOWN ON SHEET 2 (OF 2) IN THIS SERIES ARE FOR REINFORCED CONCRETE BOX CULVERT SECTIONS AND ADDITIONAL CONCRETE REQUIRED IN HEADWALLS FOR PIPE OR ARCH CULVERT SECTIONS SHALL BE ADDED TO THESE QUANTITIES.
4. THIS STANDARD MAY BE USED FOR CULVERTS WITH SKEW OF 30° ± 7.5°. AS SHOWN PER CULVERT SKEW ORIENTATION ON THIS SHEET.
5. DESIGN: SAFETY PIPE RUNNERS ARE DESIGNED FOR A TRANSVERSING LOAD OF 1,800 POUNDS AT YIELD AS RECOMMENDED BY RESEARCH REPORT 280-1, SAFETY TREATMENT OF ROADSIDE CROSS DRAINAGE STRUCTURES, TEXAS TRANSPORTATION INSTITUTE, MARCH 1981.
6. ALL SLOPES ARE EXPRESSED AS UNITS OF VERTICAL DISPLACEMENT TO UNITS OF HORIZONTAL DISPLACEMENT (V:H).
7. FOR EROSION PROTECTION SEE STANDARD B19.
8. ALL REINFORCEMENT BARS SHALL BE EPOXY COATED (E).

Paul Kovacs
APPROVED ..... CHIEF ENGINEER
DATE 6-1-2009

DATE	REVISIONS
3-01-2010	MODIFIED CULVERT SKEW DETAIL, REVISED EROSION PROTECTION AND NOTES
2-07-2012	TABLE QUANTITIES REVISED
3-31-2014	TABLE QUANTITIES REVISED
3-11-2015	REVISED NOTES

Illinois Tollway

SAFETY END TREATMENT FOR SINGLE AND MULTIPLE CULVERTS 30° SKEW, 1:4 H≤8' AND S=VARIES

STANDARD B18-05

TABLE OF DIMENSIONS

S	H	L	NL	NR	WW	W_1 (4)	W_2 (4)	WL	WR	WF	TF
9′	3′	14′-4″	14′-10 1/8″	20′-3 1/4″	7″	10′-4 3/4″	20′-10 5/8″	3′-10 1/8″	14′-4″	3″	7″
9′	4′	18′-4″	18′-11 3/4″	25′-11 1/8″	7″	10′-4 3/4″	23′-9 3/4″	4′-11″	18′-4″	9″	8″
5′	5′	22′-4″	23′-1 1/2″	31′-7″	7″	5′-9 1/4″	22′-1 1/2″	5′-11 3/4″	22′-4″	1′-3″	8″
6′	6′	26′-4″	27′-3 1/8″	37′-2 7/8″	7″	6′-11 1/8″	26′-2 1/2″	7′-5/8″	26′-4″	1′-9″	8 1/2″
7′	7′	30′-4″	31′-4 7/8″	42′-10 3/4″	7″	8′-1″	30′-3 1/2″	8′-1 1/2″	30′-4″	2′-3″	9″
8′	8′	34′-4″	35′-6 1/2″	48′-6 5/8″	8″	9′-2 7/8″	34′-4 1/2″	9′-2 3/8″	34′-4″	2′-9″	9 1/2″

TOTAL QUANTITIES ONE END MINIMUM "S"		INCREASE IN QUANTITIES FOR 1′ INCREASE IN "S"	
CONC. CU. YD.	REINF. BARS POUND	CONC. CU. YD.	REINF. BARS POUND
9.8	1010	0.22	33
14.8	1270	0.22	33
16.8	1380	0.22	33
23.5	1860	0.22	33
31.5	2330	0.22	33
42.2	2960	0.22	33

NOTE:

REINFORCEMENT BARS BENDING DIMENSIONS ARE OUT TO OUT.

PIPE RUNNERS FOR ONE END / TABLE OF REINFORCEMENT BARS FOR ONE END

H	SIZE (DIA.)	SCHEDULE	WINGWALL PIPES - ONE PER EACH LENGTH SHOWN: 15° WALL L_1	15° WALL L_2	15° WALL L_3	45° WALL L_4	45° WALL L_5	45° WALL L_6	45° WALL L_7	45° WALL L_8	HEADWALL PIPES S	HEADWALL PIPES No.	HEADWALL PIPES L_0	TOTAL LENGTH	1-C(E) BAR 45° WALL SIZE	1-C(E) BAR 45° WALL LENGTH	1-C1(E) BAR 15° WALL SIZE	1-C1(E) BAR 15° WALL LENGTH	D(E) BAR 4-#4 45° WALL LENGTH	D1(E) BAR 4-#4 15° WALL LENGTH	#4-E(E) BARS 45° WALL (6) NO.	#4-E(E) BARS 45° WALL (6) LENGTH	#4-E1(E) BARS 15° WALL (6) NO.	#4-E1(E) BARS 15° WALL (6) LENGTH
3′	3″	40	11′-11″	-	-	13′-3″	6′-0″	-	-	-	9′	4	16′-10″	98.50	#4	20′-8″	#4	15′-3″	22′-9″	17′-2″	2	21′-4″	2	17′-0″
4′	3″	80	16′-8″	-	-	18′-0″	10′-9″	-	-	-	9′	4	21′-7″	131.75	#4	26′-4″	#4	19′-5″	28′-5″	21′-4″	2	27′-0″	2	21′-1″
5′	3 1/2″	80	21′-4″	11′-6″	-	22′-8″	15′-5″	8′-2″	-	-	5′	3	26′-4″	158.08	#4	32′-0″	#4	23′-7″	34′-1″	25′-6″	2	32′-8″	2	25′-3″
6′	3 1/2″	80	26′-1″	16′-2″	-	27′-9″	20′-2″	12′-11″	5′-8″	-	6′	3	31′-0″	201.75	#4	37′-8″	#4	27′-8″	39′-9″	29′-7″	3	38′-4″	3	29′-4″
7′	4″	80	30′-10″	20′-11″	11′-0″	32′-2″	24′-9″	17′-8″	10′-9″	-	7′	4	35′-9″	291.08	#5	44′-10″ (6)	#5	31′-10″	46′-11″ (6)	33′-9″	3	44′-0″	3	33′-6″
8′	4″	80	35′-9″	25′-8″	15′-9″	36′-10″	29′-7″	22′-4″	15′-1″	7′-10″	8′	4	40′-6″	350.83	#5	50′-6″ (6)	#5	36′-0″	52′-6″ (6)	37′-10″	3	49′-8″	3	37′-7″

TABLE OF REINFORCEMENT BARS FOR ONE END

H	F(E) BARS EQUALLY SPACED 45° WALL SIZE	NO.	C_1	C_2	C_3	C_4	LENGTH	L(E) BARS 45° WALL SIZE	NO.	C_0	LENGTH	F1(E) BARS EQUALLY SPACED 15° WALL SIZE	NO.	C_1	C_2	C_3	C_4	LENGTH	H(E) DOWELS #5 @ 12″ 45° WALL NO.	LENGTH	H(E) DOWELS #5 @ 12″ 15° WALL NO.	LENGTH	J(E) DOWELS 4 - #6 (5) LENGTH	1-K(E) BAR 45° WALL SIZE	C_5	LENGTH	1-K1(E) BAR 15° WALL SIZE	C_6	LENGTH	2-W(E) BARS 45° WALL SIZE	LENGTH	2-W1(E) BARS 15° WALL SIZE	LENGTH
3′	#4	10	1′-11″	2′-2″	2′-0″	2′-1″	9′-3″	#4	-	--	--	#4	8	1′-11″	2′-2″	2′-0″	2′-1″	9′-3″	3	3′-0″	3	3′-0″	4′-6″	#5	4′-3″	5′-9″	#5	3′-10″	5′-4″	#5	20′-6″	#5	14′-11″
4′	#4	12	1′-11″	2′-8″	2′-3″	2′-4″	9′-9″	#4	1	3′-10″	6′-5″	#4	10	1′-11″	2′-8″	2′-3″	2′-4″	9′-9″	4	3′-0″	4	3′-0″	4′-6″	#5	5′-0″	6′-6″	#5	4′-4″	5′-10″	#6	26′-4″	#6	19′-2″
5′	#4	15	1′-11″	3′-2″	2′-6″	2′-7″	10′-3″	#4	2	4′-6″	7′-1″	#4	12	1′-11″	3′-2″	2′-6″	2′-7″	10′-3″	5	3′-0″	5	3′-0″	4′-6″	#5	5′-8″	7′-2″	#5	4′-10″	6′-4″	#6	32′-2″	#6	23′-5″
6′	#5	18	1′-11″	3′-8″	2′-9″	2′-10″	10′-9″	#5	2	5′-3″	7′-10″	#5	14	1′-11″	3′-8″	2′-9″	2′-10″	10′-9″	6	3′-0″	6	3′-0″	4′-6″	#5	6′-5″	7′-11″	#5	5′-4″	6′-10″	#6	38′-0″	#6	27′-8″
7′	#5	20	2′-0″	4′-3″	3′-1″	3′-2″	11′-5″	#5	3	6′-0″	8′-7″	#5	16	2′-0″	4′-2″	3′-1″	3′-1″	11′-4″	7	3′-0″	7	3′-0″	4′-6″	#5	7′-1″	8′-7″	#5	5′-10″	7′-4″	#7	45′-4″ (6)	#7	31′-11″
8′	#6	23	2′-1″	4′-10″	3′-5″	3′-6″	12′-1″	#6	3	6′-9″	9′-4″	#6	18	2′-1″	4′-8″	3′-4″	3′-5″	11′-11″	8	3′-0″	8	3′-0″	4′-6″	#5	7′-10″	9′-4″	#5	6′-5″	7′-11″	#7	51′-2″ (6)	#7	36′-2″

TABLE OF REINFORCEMENT BARS FOR ONE END

H	U(E) BARS - ONE PER EACH LENGTH SHOWN #4 @ 12″ 45° WALL C_7	C_8	C_9	C_{10}	C_{11}	C_{12}	C_{13}	C_{14} (6)	UI(E) BARS - ONE PER EACH LENGTH SHOWN #4 @ 12″ 15° WALL C_7	C_8	C_9	C_{10}	C_{11}	C_{12}	C_{13}	C_{14}	V(E) BARS #4-EQUALLY SPACED 45° WALL NO.	C_{15}	C_{16}	C_{17}	C_{18}	C_{19}	LENGTH	VI(E) ARS #4-EQUALLY SPACED 15° WALL NO.	C_{15}	C_{16}	C_{17}	C_{18}	C_{19}	LENGTH
3′	6′-2″	11′-9″	17′-5″	--	--	--	--	--	4′-6″	8′-7″	12′-9″	--	--	--	--	--	10	3′-10″	9″	2′-2″	2′-5″	1′-0″	6′-7″	7	3′-10″	9″	2′-2″	2′-5″	1′-0″	6′-7″
4′	6′-2″	11′-9″	17′-5″	23′-1″	--	--	--	--	4′-6″	8′-7″	12′-9″	16′-11″	--	--	--	--	13	4′-11″	10″	2′-9″	3′-0″	1′-0″	7′-9″	9	4′-11″	10″	2′-9″	3′-0″	1′-0″	7′-9″
5′	6′-2″	11′-9″	17′-5″	23′-1″	28′-9″	--	--	--	4′-6″	8′-7″	12′-9″	16′-11″	21′-0″	--	--	--	15	5′-11″	10″	3′-3″	3′-6″	1′-0″	8′-9″	11	5′-11″	10″	3′-3″	3′-6″	1′-0″	8′-9″
6′	6′-2″	11′-9″	17′-5″	23′-1″	28′-9″	34′-5″	--	--	4′-6″	8′-7″	12′-9″	16′-11″	21′-0″	25′-2″	--	--	18	6′-11″	10″	3′-9″	4′-0″	1′-0″	9′-9″	14	6′-11″	10″	3′-9″	4′-0″	1′-0″	9′-9″
7′	6′-2″	11′-9″	17′-5″	23′-1″	28′-9″	34′-5″	40′-0″	--	4′-6″	8′-7″	12′-9″	16′-11″	21′-0″	25′-2″	29′-4″	--	21	8′-0″	11″	4′-4″	4′-7″	1′-0″	10′-11″	16	8′-0″	11″	4′-4″	4′-7″	1′-0″	10′-11″
8′	6′-2″	11′-9″	17′-5″	23′-1″	28′-9″	34′-5″	40′-0″	47′-3″	4′-6″	8′-7″	12′-9″	16′-11″	21′-0″	25′-2″	29′-4″	33′-5″	24	9′-0″	11″	4′-10″	5′-1″	1′-1″	12′-1″	18	9′-0″	11″	4′-10″	5′-1″	1′-1″	12′-1″

NUMBER OF HEADWALL PIPE RUNNERS FOR 1 END			
S	NO.	S	NO.
10′	5	23′	11
11′	5	24′	11
12′	6	25′	12
13′	6	26′	12
14′	7	27′	12
15′	7	28′	13
16′	8	29′	13
17′	8	30′	14
18′	8	31′	14
19′	9	32′	15
20′	9	33′	15
21′	10	34′	16
22′	10	35′	16

TABLE OF REINFORCEMENT BARS FOR MINIMUM "S" - ONE END

S	H	Y(E) BARS 12-#5 (2) LENGTH	R(E) BARS 6-#5 (2) LENGTH	Z(E) BARS #4@12″ (1) No.	Z(E) BARS #4@12″ (1) LENGTH	S(E) BARS #4@12″ (1) No.	S(E) BARS #4@12″ (1) LENGTH	T(E) BARS #4@12″ (1) No.	T(E) BARS #4@12″ (1) LENGTH	P(E) BARS 8-#5 (3) LENGTH
≧ 9′	3′	11′-4″	19′-10″	10	5′-4″	20	6′-10″	10	3′-0″	6′-8″
≧ 9′	4′	11′-4″	22′-10″	10	5′-4″	23	6′-10″	10	3′-0″	7′-8″
≧ 5′	5′	6′-9″	21′-1″	6	5′-4″	21	6′-10″	6	3′-0″	8′-8″
≧ 6′	6′	7′-10″	25′-2″	7	5′-4″	25	6′-10″	7	3′-0″	9′-8″
≧ 7′	7′	9′-1″	29′-3″	8	5′-4″	30	6′-10″	8	3′-0″	10′-8″
≧ 8′	8′	10′-4″	33′-4″	9	5′-4″	34	6′-10″	9	3′-0″	11′-8″

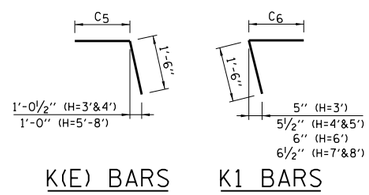

K(E) BARS K1 BARS

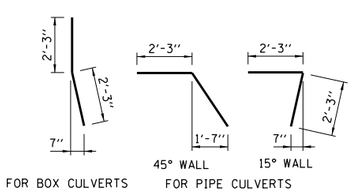

J(E) DOWELS

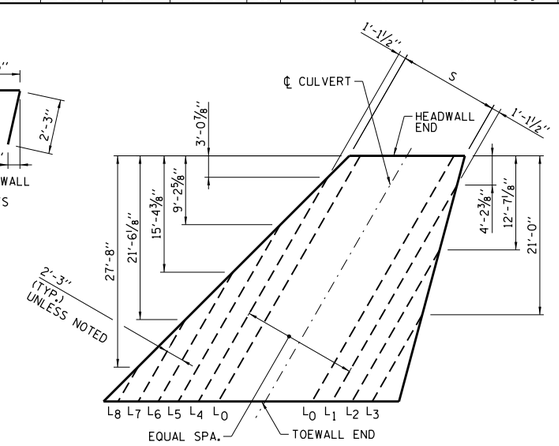

PIPE RUNNER LAYOUT

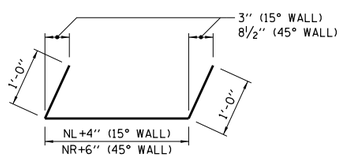

D(E) AND D1(E) BARS

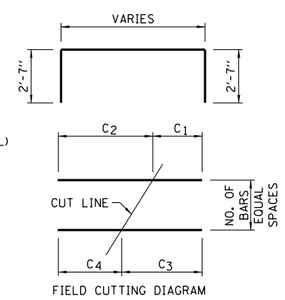

F(E) AND F1(E) BARS

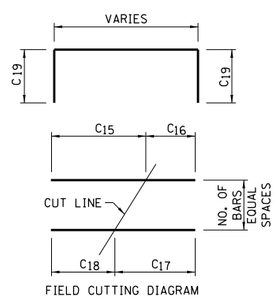

V(E) AND V1(E) BARS

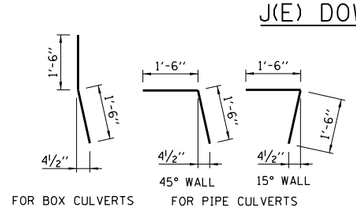

H(E) DOWELS

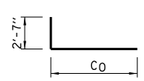

L(E) BARS

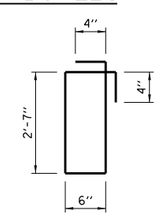

S(E) BARS

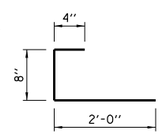

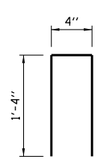

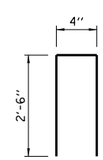

FOR BOX CULVERTS FOR PIPE CULVERTS

T(E) BARS

Z(E) BARS

NOTES FOR TABLES:

1. THE NUMBER OF S(E), T(E) AND Z(E) BARS SHALL BE INCREASED BY 1 FOR EACH 1 FOOT OF INCREASE IN DIMENSION "W_1".
2. THE LENGTH OF R(E) AND Y(E) BARS SHALL BE INCREASED BY 1′-1 7/8″ FOR EACH 1 FOOT OF INCREASE IN DIMENSION "S".
3. THE NUMBER OF P(E) BARS SHOWN ARE FOR SINGLE SPAN PIPES OR BOX CULVERTS. THIS NUMBER SHALL BE INCREASED BY 4 FOR EACH MULTIPLE OF PIPE OR BOX ADDED.
4. THIS DIMENSION SHALL BE INCREASED BY 1′-1 7/8″ INCHES FOR EACH 1 FOOT INCREASE IN DIMENSION "S".
5. 2 BARS FOR 15° WALL, 2 BARS FOR 45° WALL.
6. THE LENGTH OF THIS BAR INCLUDES ONE 1′-6″ MINIMUM LAP.

SHEET 2 OF 2

Illinois Tollway

SAFETY END TREATMENT FOR SINGLE AND MULTIPLE CULVERTS 30° SKEW, 1:4 H≤8′ AND S=VARIES

STANDARD B18-05

Paul Kovacs
APPROVED CHIEF ENGINEER DATE 6-1-2009

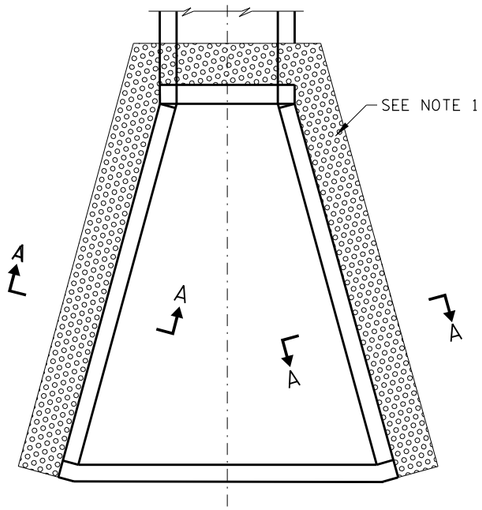

PLAN-0° SKEW, H ≤ 4′

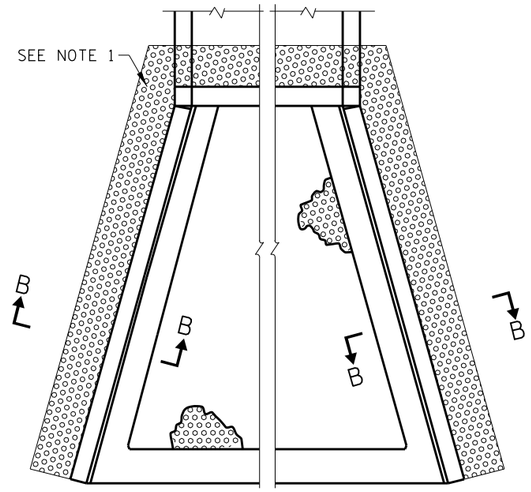

PLAN-0° SKEW, H ≤ 8′

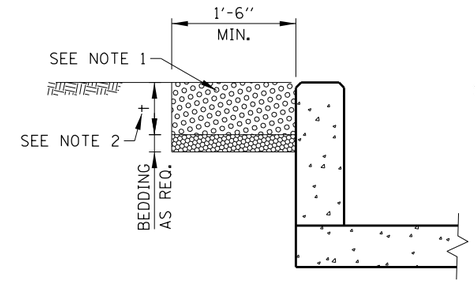

SECTION A-A

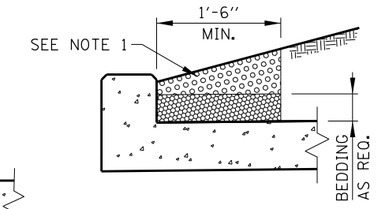

SECTION AT HEADWALL

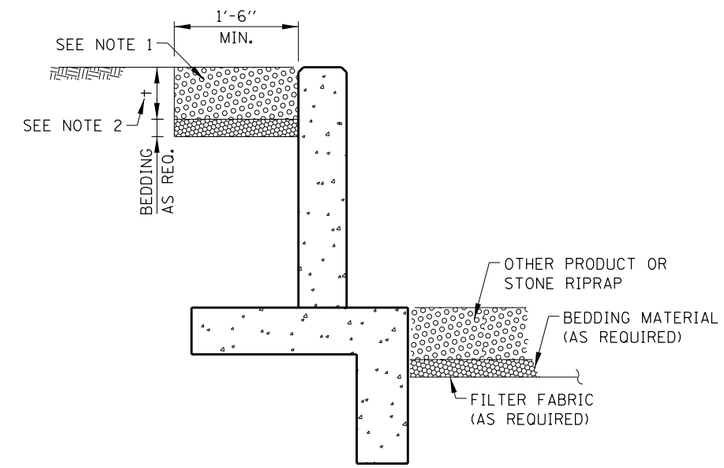

SECTION B-B

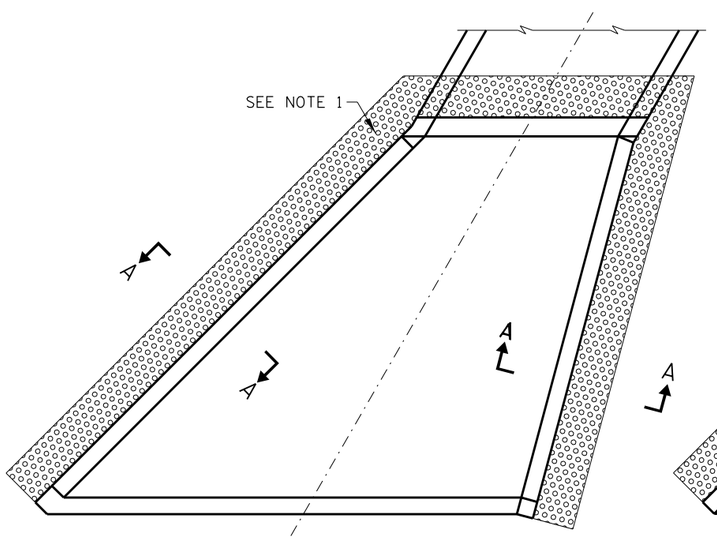

PLAN-SKEW, H ≤ 4′

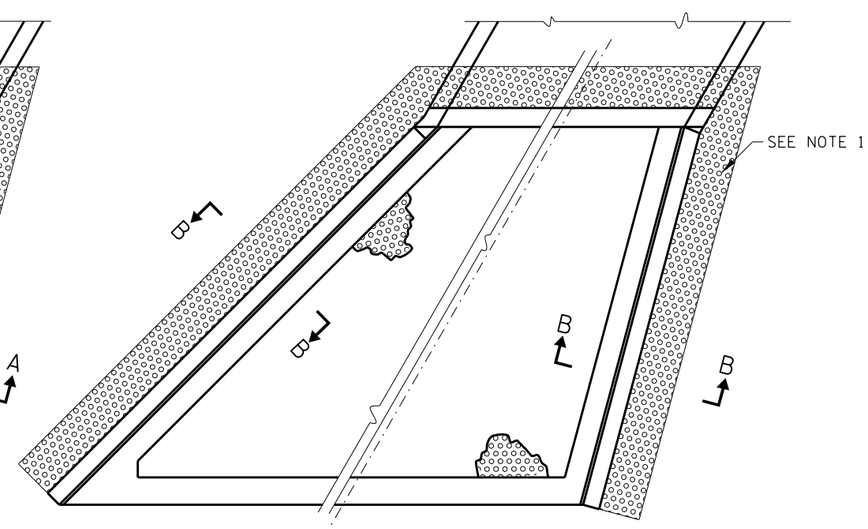

PLAN-SKEW, H ≤ 8′

NOTES:

1. THE PREFERRED METHOD FOR ACHIEVING EROSION PROTECTION AT END SECTIONS SHOULD BE THROUGH THE USE OF PRODUCTS THAT PROMOTE REVEGETATION WITHIN THE AREA OF CONCERN.
2. THICKNESS "t" WILL BE DETERMINED BY THE MANUFACTURER'S RECOMMENDATION FOR THE PRODUCT USED.
3. EROSION PROTECTION PLACEMENT SHALL BE INSTALLED FLUSH WITH ADJACENT GRADE.
4. FOR USE WITH STANDARDS B10 TO B18.
5. STONE RIPRAP SHALL BE IN ACCORDANCE WITH THE STANDARD SPECIFICATIONS AND DRAINAGE DESIGN MANUAL.

Illinois Tollway

DATE	REVISIONS
3-01-2010	REVISED EROSION PROTECTION AND NOTES
3-11-2015	REVISED NOTES

EROSION PROTECTION

STANDARD B19-02

Paul Kovacs
APPROVED CHIEF ENGINEER DATE 3-1-2010

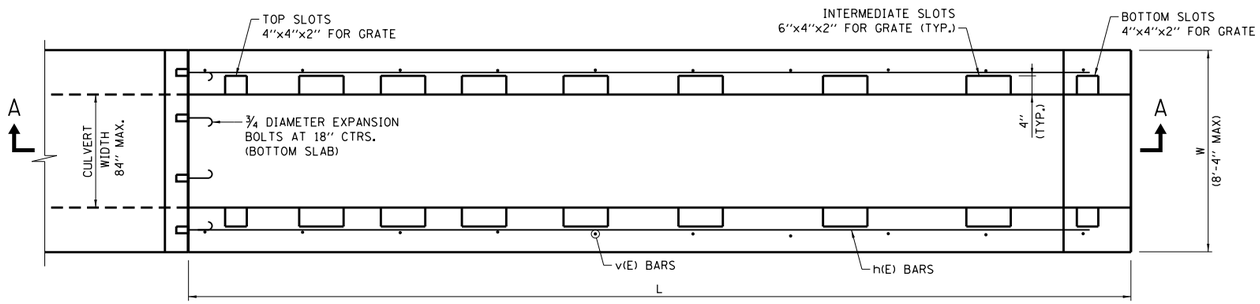

PLAN

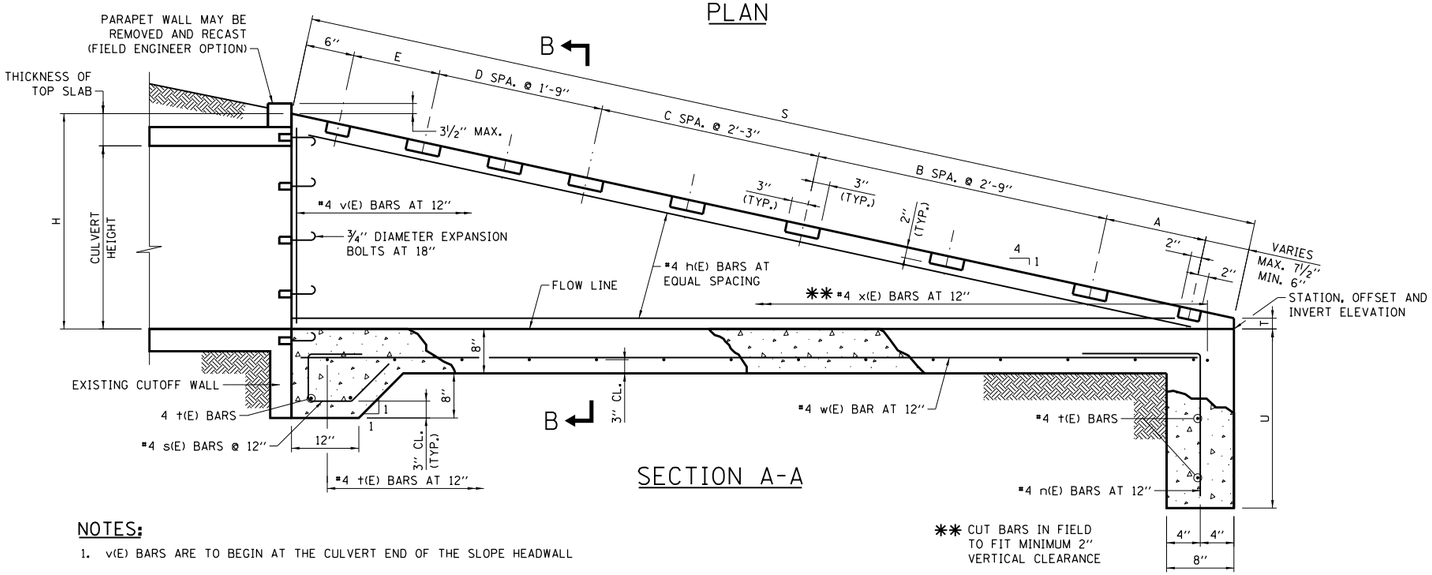

SECTION A-A

** CUT BARS IN FIELD TO FIT MINIMUM 2'' VERTICAL CLEARANCE

DIMENSIONS AND QUANTITIES IN TWO WINGWALLS 1:4 SLOPE

CULVERT HEIGHT	DIMENSIONS							NO. OF SPACES			CONCRETE CLASS SI * C.Y.	REINF. BARS * (POUND)
	H	L	S	T	U	A	E	B	C	D		
36''	3'-8''	14'-0''	14'-5 1/8''	2''	2'-8''	2'-2''	2'-2''	-	4	-	1.33	188
42''	4'-3''	16'-4''	16'-10''	2''	3'-2''	2'-8''	2'-2''	4	-	-	1.78	259
48''	4'-9''	18'-4''	18'-10 3/4''	2''	3'-2''	2'-2''	2'-2''	-	6	-	2.23	304
54''	5'-3''	20'-4''	20'-11 1/2''	2''	3'-6''	2'-2''	2'-2''	4	2	-	2.72	379
60''	5'-10''	22'-8''	23'-4 3/8''	2''	3'-6''	2'-2''	2'-2''	-	8	-	3.36	468

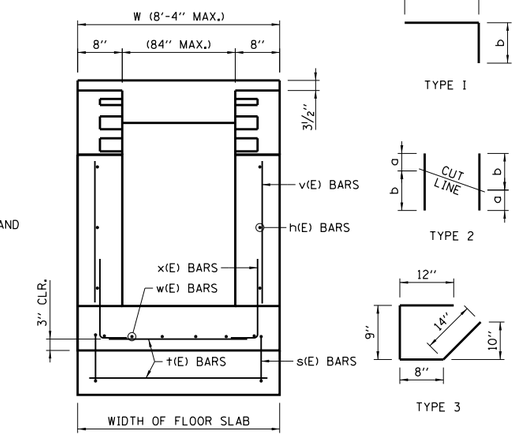

SECTION B-B
SINGLE BOX ≤ 84'' WIDTH

TABLE OF BARS IN ONE WINGWALL 1:4 SLOPE

NO. 4 REINFORCEMENT BARS						
CULVERT HEIGHT	MARK(E)	TYPE	NO. REQ'D	LENGTH	a	b
36''	h 36	STR.	4	13'-8''		
	3/4'' EXP BLT	---	3	---		
	v 36	2	7	5'-6''	2'-0''	3'-6''
	x 36	1	15	3'-2''	2'-2''	1'-0''
42''	h 42	STR.	5	16'-0''		
	3/4'' EXP BLT	---	4	---		
	v 42	2	10	6'-0''	1'-11''	4'-1''
	x 42	1	17	3'-2''	2'-2''	1'-0''
48''	h 48	STR.	5	18'-0''		
	3/4'' EXP BLT	---	4	---		
	v 48	2	12	6'-5''	1'-10''	4'-7''
	x 48	1	19	3'-2''	2'-2''	1'-0''
54''	h 54	STR.	6	20'-0''		
	3/4'' EXP BLT	---	4	---		
	v 54	2	14	6'-11''	1'-10''	5'-1''
	x 54	1	21	3'-2''	2'-2''	1'-0''
60''	h 60	STR.	7	22'-4''		
	3/4'' EXP BLT	---	5	---		
	v 60	2	16	7'-7''	1'-11''	5'-8''
	x 60	1	23	3'-2''	2'-2''	1'-0''

NOTES:

1. v(E) BARS ARE TO BEGIN AT THE CULVERT END OF THE SLOPE HEADWALL
2. 3/4'' DIAMETER EXPANSION BOLTS SHALL CONSIST OF SELF DRILLING EXPANSION SHIELDS AND 3/4'' DIAMETER HOOKED BOLTS. HOOKED BOLTS SHALL EXTEND A MINIMUM OF 9'' INTO NEW CONCRETE WITH ANCHORAGE IN ACCORDANCE WITH THE STANDARD SPECIFICATIONS. MINIMUM CERTIFIED PROOF LOAD = 4,080 LBS.

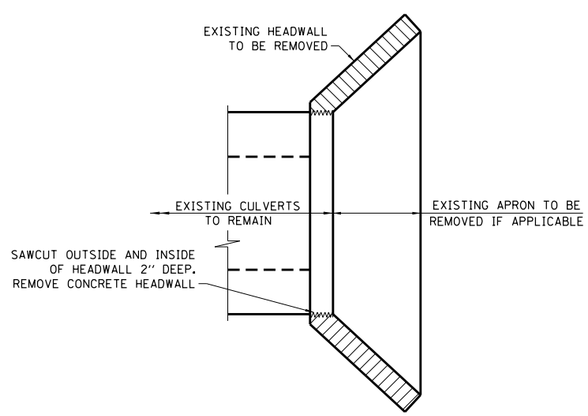

REMOVAL DETAIL

TABLE OF BARS IN SLAB 1:4 SLOPE
(PER FT. OF FLOOR SLAB WIDTH)

NO. 4 REINFORCEMENT BARS								
CULVERT HEIGHT	MARK(E)	TYPE	NO. REQ'D	LENGTH	a	b	REINF. BAR LB. *	CONCRETE CLASS SI (C.Y.) *
36''	n 36	1	1	4'-1''	2'-1''	2'-0''	27	.45
	w 36	STR.	1	13'-5''				
	t 36	STR	18	W-(0'-4'')				
	3/4'' EXP BLT	---	0.67	---				
	s 36	3	1	3'-7''				
42''	n 42	1	1	4'-7''	2'-7''	2'-0''	32	.53
	w 42	STR.	1	15'-9''				
	t 42	STR	20	W-(0'-4'')				
	3/4'' EXP BLT	---	0.67	---				
	s 42	3	1	3'-7''				
48''	n 48	1	1	4'-7''	2'-7''	2'-0''	33	.58
	w 48	STR.	1	17'-9''				
	t 48	STR	22	W-(0'-4'')				
	3/4'' EXP BLT	---	0.67	---				
	s 48	3	1	3'-7''				
54''	n 54	1	1	4'-11''	2'-11''	2'-0''	37	.64
	w 54	STR.	1	19'-9''				
	t 54	STR	24	W-(0'-4'')				
	3/4'' EXP BLT	---	0.67	---				
	s 54	3	1	3'-7''				
60''	n 60	1	1	4'-11''	2'-11''	2'-0''	39	.70
	w 60	STR.	1	22'-1''				
	t 60	STR	26	W-(0'-4'')				
	3/4'' EXP BLT	---	0.67	---				
	s 60	3	1	3'-7''				

GENERAL NOTES:

1. ALL EXPOSED CONCRETE EDGES SHALL HAVE A 3/4'' X 45° CHAMFER. CHAMFER ON VERTICAL EDGES SHALL BE CONTINUED A MINIMUM OF ONE FOOT BELOW FINISHED GROUND LEVEL.
2. COVER FROM THE FACE OF CONCRETE TO FACE OF REINFORCEMENT BARS SHALL BE 2'' UNLESS OTHERWISE SHOWN.
3. CONCRETE QUANTITIES SHOWN ARE FOR REINFORCED CONCRETE BOX CULVERT HEADWALLS.
4. PAY ITEMS ARE IDENTIFIED BY AN ASTERISK (*).
5. ALL SLOPES ARE EXPRESSED AS UNITS OF VERTICAL DISPLACEMENT TO UNITS OF HORIZONTAL DISPLACEMENT (V:H).
6. ALL REINFORCEMENT BARS SHALL BE EPOXY COATED (E).

NOTES:

1. TYPE 2 ''v(E)'' BARS SHALL BE ORDERED FULL LENGTH AND CUT IN THE FIELD. THE REMAINING PORTION OF THE ''v(E)'' BARS SHALL BE USED IN THE OTHER WALL.
2. THE LONG LEG OF THE ''n(E)'' BAR SHALL BE VERTICAL.
3. SEE STANDARD B23 FOR GRATING DETAILS.

Paul Kovacs
APPROVED ..... CHIEF ENGINEER
DATE 2-7-2012

DATE	REVISIONS
2-07-2012	REVISED TABLE QUANTITIES AND NOTES
3-11-2015	REVISED TABLE TITLES AND NOTES
3-31-2016	STATION, OFFSET & INVERT ELEVATION MOVED.

Illinois Tollway

HEADWALL TYPE IV
CONCRETE BOX CULVERT
≤ 84'' WIDTH

STANDARD B20-05

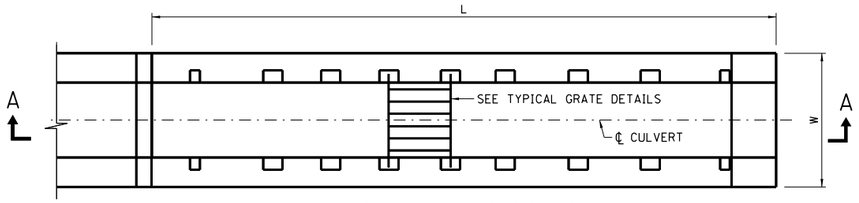

PLAN VIEW (NO SKEW)
SINGLE BOX CULVERT ≤ 84'' WIDE

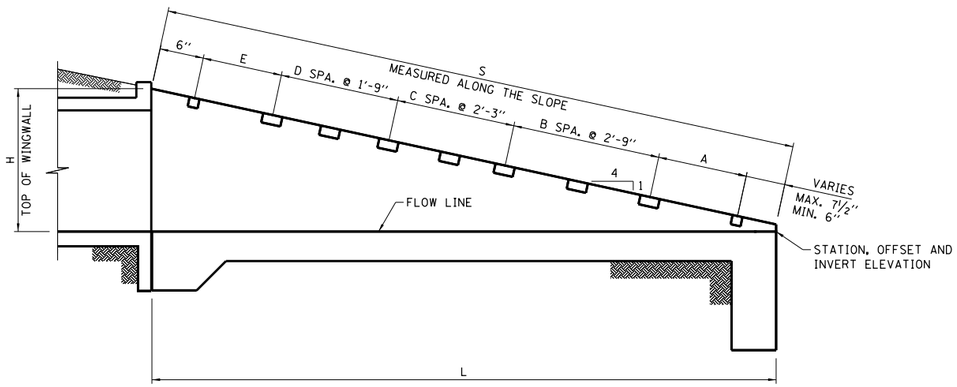

SECTION A-A
END TREATMENT - MULTIPLE OR SINGLE CELL
BOX CULVERT

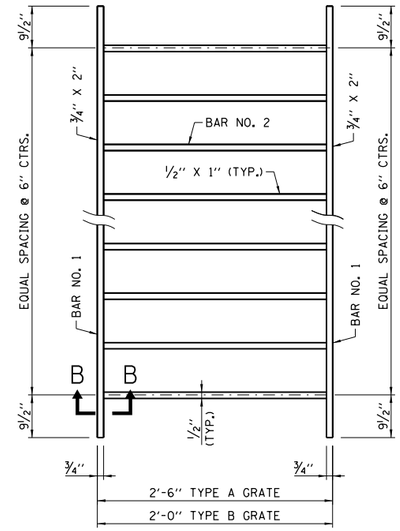

TYPICAL GRATE
(NO SKEW)

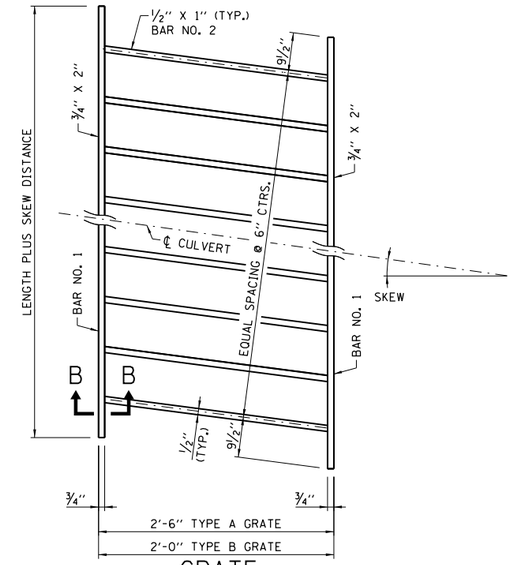

GRATE
(WITH SKEW)

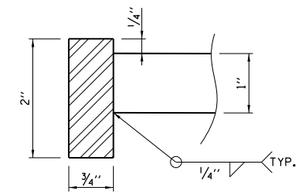

SECTION B-B

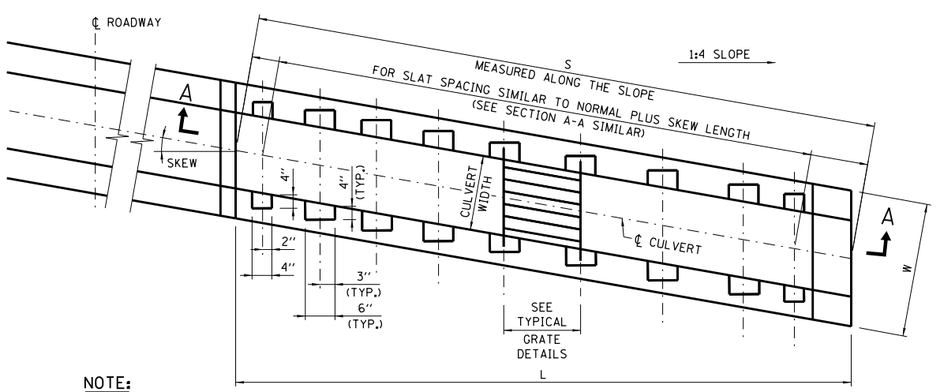

NOTE:

REINFORCEMENT BARS AND GRATE SPACING ARE SIMILAR TO BOX CULVERT AT NORMAL (NO SKEW).

PLAN VIEW (WITH SKEW)
SINGLE BOX CULVERT ≤ 84'' WIDE

GRATING DIMENSIONS AND QUANTITIES
IN ONE HEADWALL TYPE IV
BASED ON A 1 FOOT WIDTH, 1:4 SLOPE, AND NO SKEW

CULVERT HEIGHT	GRATES		BARS FOR ONE GRATE				GRATING ✱ (LBS.)
			BAR NO. 1		BAR NO. 2		
	NUMBER REQUIRED	TYPE REQ'D.	BARS REQ'D.	LENGTH	BARS REQ'D.	LENGTH	EACH GRATE
36''	6	B	2	W-0.75	$\frac{W-1.33}{0.5}-1$	1'-10½''	16.6W - 19.3
42''	5	A	2	W-0.75	$\frac{W-1.33}{0.5}-1$	2'-4½''	18.3W - 22.4
	1	B	2			1'-10½''	16.6W - 19.3
48''	8	B	2	W-0.75	$\frac{W-1.33}{0.5}-1$	1'-10½''	16.6W - 19.3
54''	4	A	2	W-0.75	$\frac{W-1.33}{0.5}-1$	2'-4½''	18.3W - 22.4
	4	B	2			1'-10½''	16.6W - 19.3
60''	10	B	2	W-0.75	$\frac{W-1.33}{0.5}-1$	1'-10½''	16.6W - 19.3

DIMENSIONS ''S'' FOR SLOPE 1:4
FOR VARIOUS CULVERT SIZES AND SKEWS

CULVERT HEIGHT	NO SKEW	≤ 10°	10° ≤ 20°	20° ≤ 30°
36''	14'-5⅛''	14'-7¾''	15'-4¼''	16'-8''
42''	16'-10''	17'-1''	17'-11''	19'-5¼''
48''	18'-10¾''	19'-2¼''	20'-1¼''	21'-10''
54''	20'-11½''	21'-3⅜''	22'-3⅝''	24'-2⅜''
60''	23'-4⅜''	23'-8¾''	24'-10⅜''	26'-11¾''

GENERAL NOTES:

1. ALL TABLE DIMENSIONS AND QUANTITIES ARE FOR SINGLE BOX CULVERT HEADWALLS. TO ADAPT ANY OF THESE TABLES FOR DOUBLE BOX CULVERTS, DOUBLE THE NUMBER OF GRATES REQUIRED AND ADD AN ADDITIONAL WALL. (WALL THICKNESS SHALL BE SAME AS THE CENTER WALL THICKNESS OF THE BOX CULVERT).
2. FOR QUANTITY CALCULATIONS DIMENSION ''W'' SHALL BE MEASURED IN FEET.
3. QUANTITIES FOR SKEWED HEADWALLS NOT SHOWN.
4. PAY ITEMS ARE IDENTIFIED BY AN ASTERISK (✱).
5. ALL SLOPES ARE EXPRESSED AS UNITS OF VERTICAL DISPLACEMENT TO UNITS OF HORIZONTAL DISPLACEMENT (V:H).

Illinois Tollway

DATE	REVISIONS
06-01-09	CHANGED SECTION B-B
	DIMENSION REVISED NOTES.
02-07-12	DELETED SECTION FROM
	PLAN VIEW.
3-31-2016	STATION, OFFSET AND
	INVERT ELEVATION MOVED.

GRATING FOR
HEADWALL TYPE IV
BOX CULVERT ≤ 84'' WIDE

STANDARD B21-03

Paul Kovacs
APPROVED CHIEF ENGINEER DATE 2-7-2012

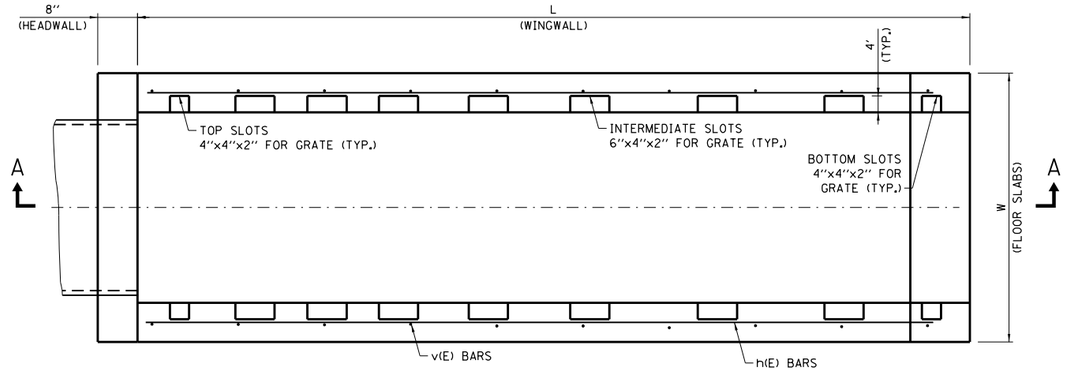

PLAN

NOTE:

v(E) BARS ARE TO BEGIN AT THE CULVERT END OF THE SLOPE HEADWALL

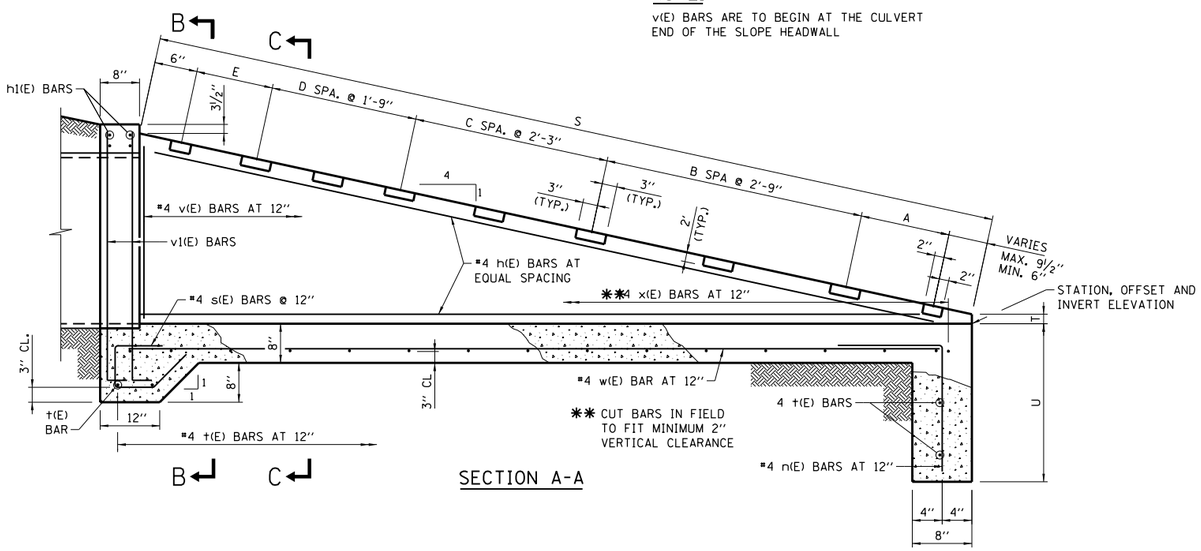

SECTION A-A

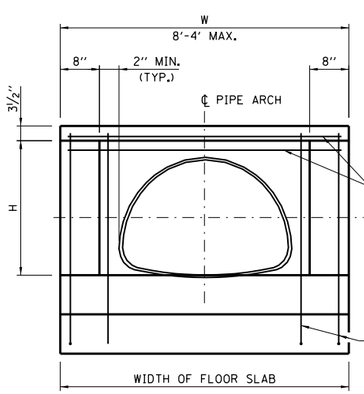

SECTION B-B

ELLIPTICAL PIPE OR PIPE-ARCH

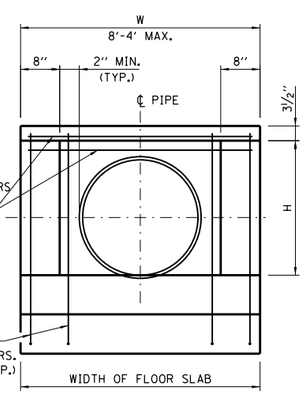

SECTION B-B

CIRCULAR PIPE

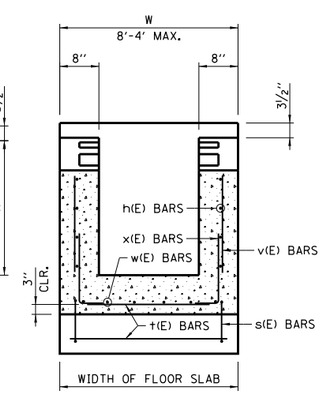

SECTION C-C

DIMENSIONS AND QUANTITIES IN TWO WINGWALLS 1:4 SLOPE

PIPE-ARCH ELLIPTICAL PIPE (SPAN ≤ 77'')	CIRCULAR PIPE (DIAMETER)	DIMENSIONS							NO. OF SPACES			CONCRETE CLASS SI ✱ CY.	REINF. BAR ✱ (POUND)
		H	L	S	T	U	A	E	B	C	D		
RISE ≤ 30''		3'-2''	12'-0''	12'-4 1/2''	2''	2'-8''	2'-2''	2'-2''	-	3	-	.98	151
RISE ≤ 36''		3'-8''	14'-0''	14'-5 1/8''	2''	2'-8''	2'-2''	2'-2''	-	4	-	1.33	188
RISE ≤ 42''		4'-3''	16'-4''	16'-10''	2''	3'-2''	2'-8''	2'-2''	4	-	-	1.78	251
RISE ≤ 48''		4'-9''	18'-4''	18'-10 3/4''	2''	3'-2''	2'-2''	2'-2''	-	6	-	2.23	295
RISE ≤ 54''	54''	5'-3''	20'-4''	20'-11 1/2''	2''	3'-6''	2'-2''	2'-2''	4	2	-	2.72	370
RISE ≤ 60''	60''	5'-10''	22'-8''	23'-4 3/4''	2''	3'-6''	2'-2''	2'-2''	-	8	-	3.36	428
	66''	6'-4''	24'-8''	25'-5 1/8''	2''	3'-6''	2'-2''	2'-2''	4	4	-	3.96	517

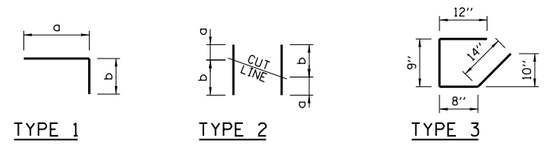

TYPE 1 TYPE 2 TYPE 3

TABLE OF BARS IN ONE WINGWALL 1:4 SLOPE

NO. 4 REINFORCEMENT BARS						
H	MARK(E)	TYPE	NO. REQ'D	LENGTH	a	b
3'-2''	H 30	STR.	4	11'-8''		
	V 30	2	5	5'-0''	2'-0''	3'-0''
	X 30	1	13	3'-2''	2'-2''	1'-0''
3'-8''	H 36	STR.	4	13'-8''		
	V 36	2	7	5'-6''	2'-0''	3'-6''
	X 36	1	15	3'-2''	2'-2''	1'-0''
4'-3''	H 42	STR.	5	16'-0''		
	V 42	2	9	6'-0''	1'-11''	4'-1''
	X 42	1	17	3'-2''	2'-2''	1'-0''
4'-9''	H 48	STR.	5	18'-0''		
	V 48	2	11	6'-5''	1'-10''	4'-7''
	X 48	1	19	3'-2''	2'-2''	1'-0''
5'-3''	H 54	STR.	6	20'-0''		
	V 54	2	13	6'-11''	1'-10''	5'-1''
	X 54	1	21	3'-2''	2'-2''	1'-0''
5'-10''	H 60	STR.	6	22'-4''		
	V 60	2	15	7'-7''	1'-11''	5'-8''
	X 60	1	23	3'-2''	2'-2''	1'-0''
6'-4''	H 66	STR.	7	24'-4''		
	V 66	2	17	8'-1''	1'-11''	6'-2''
	X 66	1	25	3'-2''	2'-2''	1'-0''

TABLE OF BARS IN SLAB 1:4 SLOPE (PER FT. OF FLOOR SLAB WIDTH)

NO. 4 REINFORCEMENT BARS								
H	MARK(E)	TYPE	NO. REQ'D	LENGTH	a	b	REINF. BARS (POUND) ✱	CONCRETE CLASS SI (C.Y.) ✱
3'-2''	h 131	STR.	4	W-(0'-4'')				
	v 131	1	8	5'-0''	4'-4''	8''		
	n 30	1	1	4'-1''	2'-1''	2'-0''	52	.38
	w 30	STR.	1	12'-1''				
	t 30	STR	15	W-(0'-4'')				
	s 30	3	1	3'-7''				
3'-8''	h 136	STR.	4	W-(0'-4'')				
	v 136	1	8	5'-6''	4'-10''	8''		
	n 36	1	1	4'-1''	2'-1''	2'-0''	58	.43
	w 36	STR.	1	14'-1''				
	t 36	STR	19	W-(0'-4'')				
	s 36	3	1	3'-7''				
4'-3''	h 142	STR.	4	W-(0'-4'')				
	v 142	1	8	6'-1''	5'-5''	8''		
	n 42	1	1	4'-7''	2'-7''	2'-0''	65	.50
	w 42	STR.	1	16'-5''				
	t 42	STR	21	W-(0'-4'')				
	s 42	3	1	3'-7''				
4'-9''	h 148	STR.	4	W-(0'-4'')				
	v 148	1	8	6'-7''	5'-11''	8''		
	n 48	1	1	4'-7''	2'-7''	2'-0''	70	.55
	w 48	STR.	1	18'-5''				
	t 48	STR	23	W-(0'-4'')				
	s 48	3	1	3'-7''				
5'-3''	h 154	STR.	4	W-(0'-4'')				
	v 154	1	8	7'-1''	6'-5''	8''		
	n 54	1	1	4'-11''	2'-11''	2'-0''	76	.60
	w 54	STR.	1	20'-5''				
	t 54	STR	25	W-(0'-4'')				
	s 54	3	1	3'-7''				
5'-10''	h 160	STR.	4	W-(0'-4'')				
	v 160	1	8	7'-8''	7'-0''	8''		
	n 60	1	1	4'-11''	2'-11''	2'-0''	82	.66
	w 60	STR.	1	22'-9''				
	t 60	STR	27	W-(0'-4'')				
	s 60	3	1	3'-7''				
6'-4''	h 166	STR.	4	W-(0'-4'')				
	v 166	1	8	8'-2''	7'-6''	8''		
	n 66	1	1	4'-11''	2'-11''	2'-0''	87	.71
	w 66	STR.	1	24'-9''				
	t 66	STR	29	W-(0'-4'')				
	s 4	3	1	3'-7''				

GENERAL NOTES:

1. TYPE 2 "v(E)" BARS SHALL BE ORDERED FULL LENGTH AND CUT IN THE FIELD. THE REMAINING PORTION OF THE "v(E)" BARS SHALL BE USED IN THE OTHER WALL.
2. THE LONG LEG OF THE "n(E)" BARS SHALL BE VERTICAL.
3. PAY ITEMS ARE IDENTIFIED BY AN ASTERISK (✱).
4. SEE STANDARD B23 FOR GRATING DETAILS.
5. ALL CONCRETE SHALL BE CLASS SI.
6. ALL SLOPES ARE EXPRESSED AS UNITS OF VERTICAL DISPLACEMENT TO UNITS OF HORIZONTAL DISPLACEMENT (V:H).
7. ALL REINFORCEMENT BARS SHALL BE EPOXT COATED (E).

Paul Kovacs
APPROVED CHIEF ENGINEER DATE 2-7-2012

DATE	REVISIONS
2-07-2012	REVISED TABLE
	QUANTITIES
3-11-2015	REVISED NOTES
3-31-2016	STATION, OFFSET AND
	INERT ELEVATION. MOVE,

Illinois Tollway

HEADWALL TYPE IV
METAL PIPE & PIPE-ARCH
CULVERTS

STANDARD B22-04

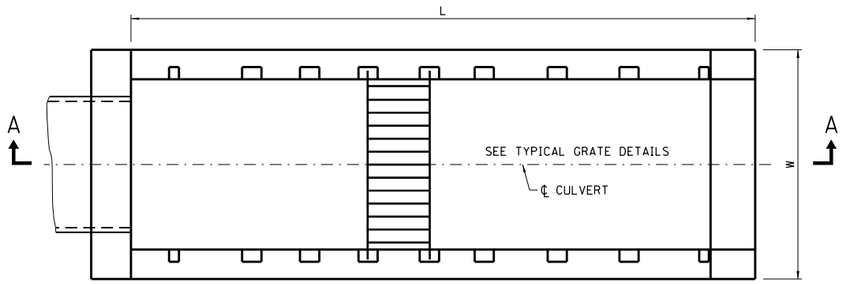

PLAN VIEW (NO SKEW)

SINGLE BOX CULVERT ≤ 84'' WIDE

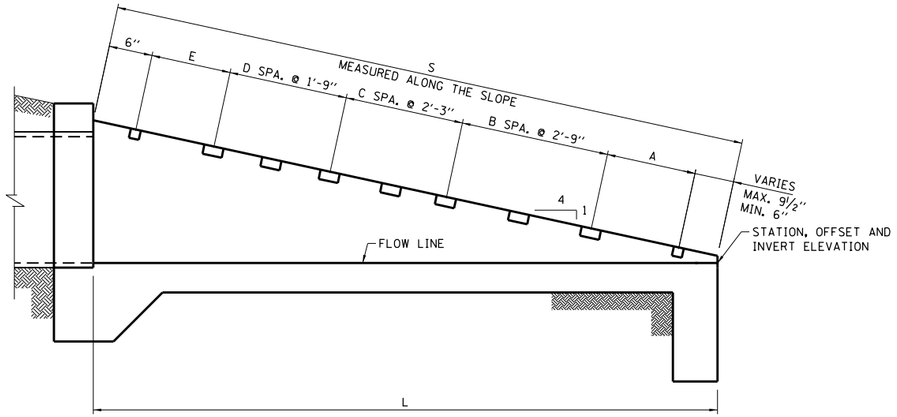

SECTION A-A

END TREATMENT - MULTIPLE OR SINGLE CELL BOX CULVERT

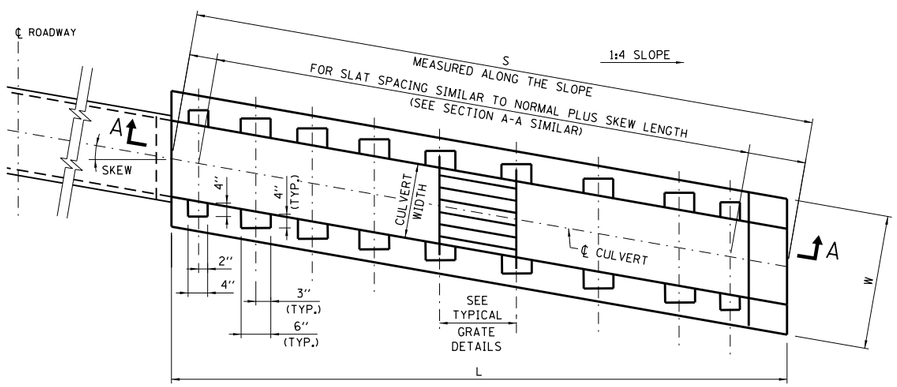

PLAN VIEW (WITH SKEW)

NOTE:

REINFORCEMENT BARS AND GRATE SPACING ARE SIMILAR TO BOX CULVERT AT NORMAL (NO SKEW).

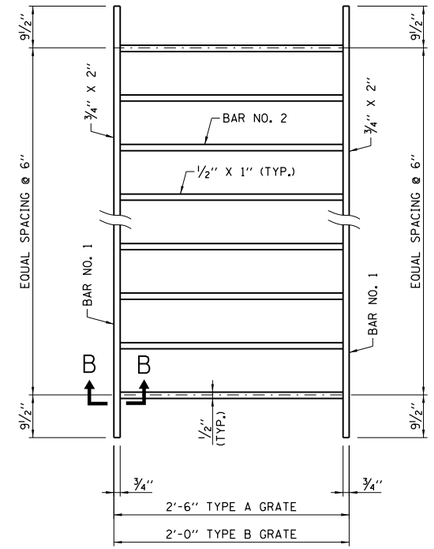

GRATE DETAILS
(WITH NO SKEW)

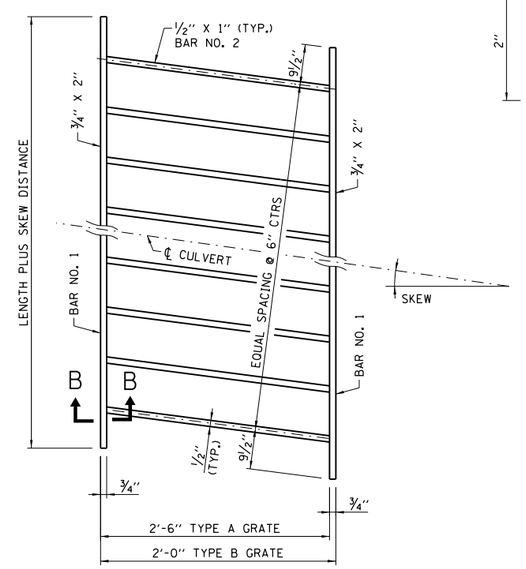

GRATE DETAILS
(WITH SKEW)

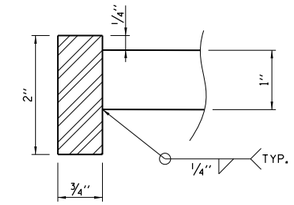

SECTION B-B

GRATING DIMENSIONS AND QUANTITIES IN ONE HEADWALL TYPE IV BASED ON A 1 FOOT WIDTH, 1:4 SLOPE AND SKEW

H	GRATES		BARS FOR ONE GRATE				GRATING (POUND)✱
			BAR NO. 1		BAR NO. 2		
	NUMBER REQUIRED	TYPE REQ'D.	BARS REQ'D.	LENGTH	BARS REQ'D.	LENGTH	EACH GRATE
3'-2''	5	B	2	W-.75	$\frac{W-1.33}{0.5}-1$	1'-10½''	16.6W - 19.3
3'-8''	6	B	2	W-.75	$\frac{W-1.33}{0.5}-1$	1'-10½''	16.6W - 19.3
4'-3''	5	A	2	W-.75	$\frac{W-1.33}{0.5}-1$	2'-4½''	18.3W - 22.4
	1	B	2			1'-10½''	16.6W - 19.3
4'-9''	8	B	2	W-.75	$\frac{W-1.33}{0.5}-1$	1'-10½''	16.6W - 19.3
5'-3''	4	A	2	W-.75	$\frac{W-1.33}{0.5}-1$	2'-4½''	18.3W - 22.4
	4	B	2			1'-10½''	16.6W - 19.3
5'-10''	10	B	2	W-.75	$\frac{W-1.33}{0.5}-1$	1'-10½''	16.6W - 19.3
6'-4''	4	A	2	W-.75	$\frac{W-1.33}{0.5}-1$	2'-4½''	18.3W - 22.4
	6	B	2			1'-10½''	16.6W - 19.3

DIMENSIONS ''S'' FOR SLOPE 1:4 FOR VARIOUS CULVERT SIZES AND SKEWS

H	NO SKEW	∠ 10°	10° ∠ 20°	20° ∠ 30°
3'-2''	12'-4½''	12'-6¾''	13'-2''	14'-3⅜''
3'-8''	14'-5¼''	14'-7¾''	15'-4¼''	16'-8''
4'-3''	16'-10''	17'-1''	17'-11''	19'-5¼''
4'-9''	18'-10¾''	19'-2¼''	20'-1¼''	21'-10''
5'-3''	20'-11½''	21'-3⅜''	22'-3⅝''	24'-2¾''
5'-10''	23'-4⅜''	23'-8¾''	24'-10⅜''	26'-11¾''
6'-4''	25'-5⅛''	25'-9¾''	27'-0⅝''	29'-4¼''

GENERAL NOTES:

1. ALL TABLE DIMENSIONS AND QUANTITIES ARE FOR SINGLE CULVERT HEADWALLS. TO ADAPT ANY OF THESE TABLES FOR DOUBLE CULVERTS, DOUBLE THE NUMBER OF GRATES REQUIRED AND ADD AN ADDITIONAL WALL. (WALL THICKNESS SHALL BE SAME AS THE CENTER WALL THICKNESS OF THE CULVERT.)
2. FOR QUANTITY CALCULATIONS DIMENSION "W" SHALL BE MEASURED IN FEET.
3. QUANTITIES FOR SKEWED HEADWALLS NOT SHOWN.
4. PAY ITEMS ARE IDENTIFIED BY AN ASTERISK (✱).
5. ALL SLOPES ARE EXPRESSED AS UNITS OF VERTICAL DISPLACEMENT TO UNITS OF HORIZONTAL DISPLACEMENT (V:H).

Paul Kovacs
APPROVED CHIEF ENGINEER DATE 2-7-2012

DATE	REVISIONS
06-01-09	CHANGED SECTION B-B
	DIMENSION REVISED NOTES.
02-07-12	DELETED SECTION VIEW
	FROM SKEW PLAN.
3-31-2016	STATION, OFFSET AND
	INVERT ELEVATION MOVED.

Illinois Tollway

GRATING FOR HEADWALL TYPE IV PIPE AND PIPE-ARCH CULVERTS

STANDARD B23-03

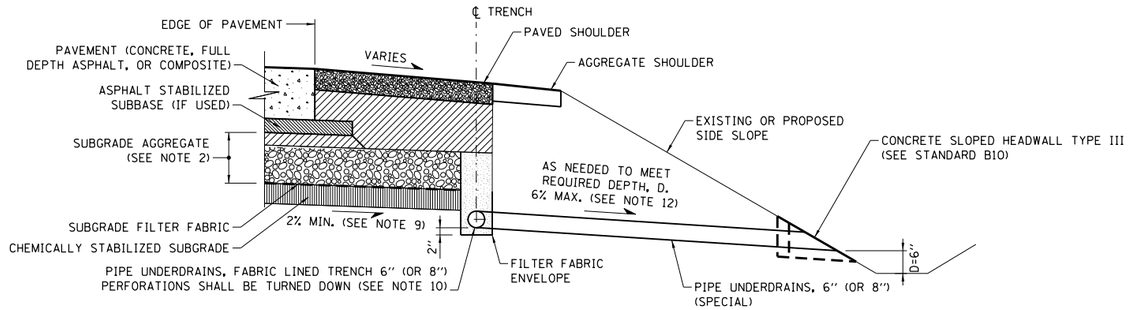

LOCATIONS WITHOUT GUTTER

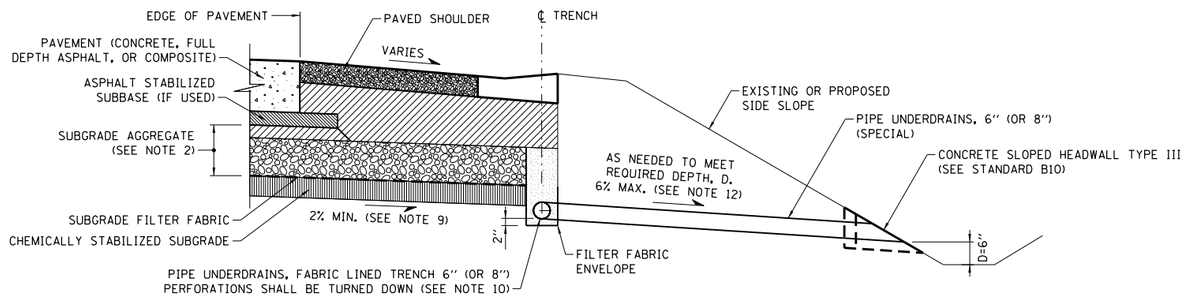

LOCATIONS WITH GUTTER

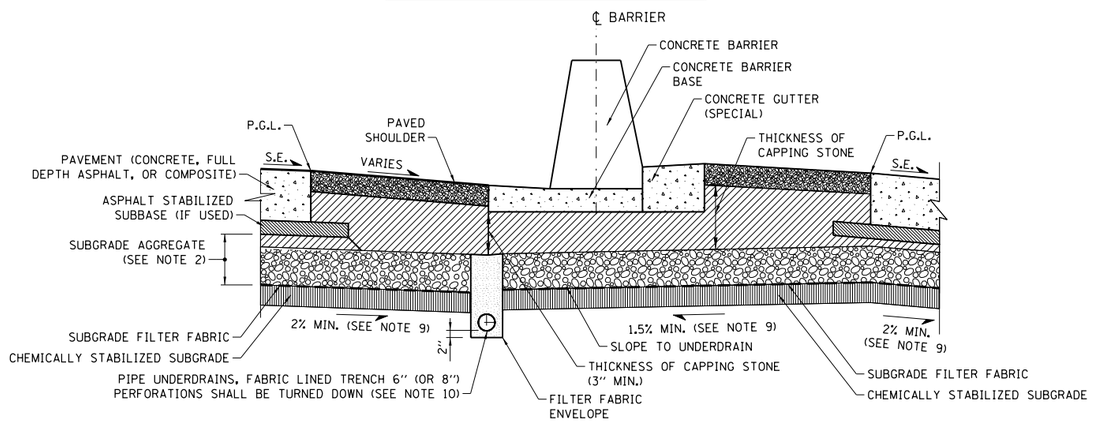

LOCATIONS WITH VARIABLE HEIGHT DOUBLE FACE BARRIER

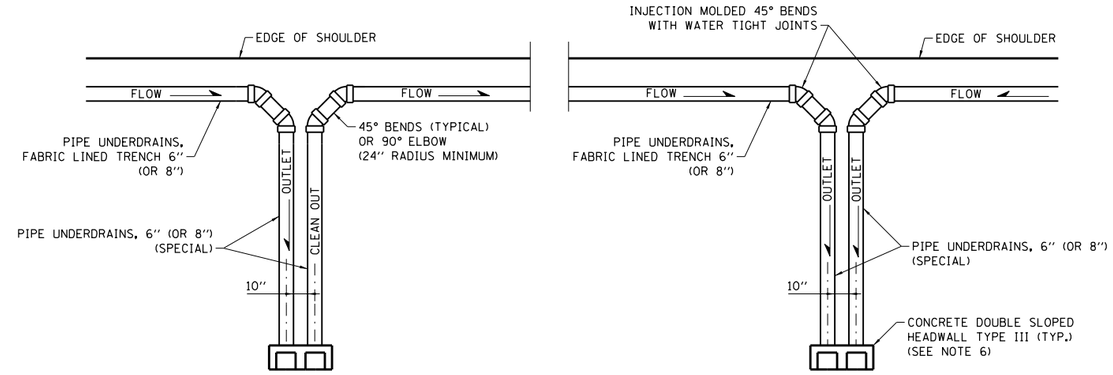

ON GRADE

AT SAGS (LOW POINTS)

DETAIL OF PIPE UNDERDRAIN OUTLETS

(SEE NOTE 7)

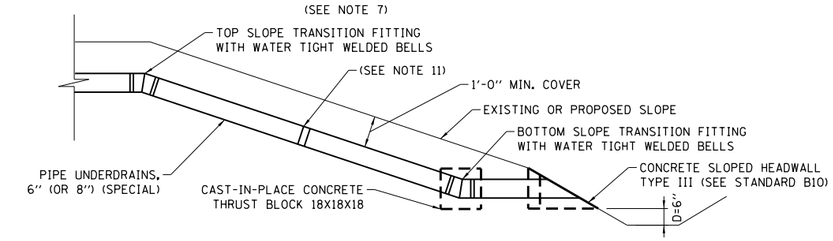

DETAIL OF PIPE UNDERDRAIN OUTLET ON HIGH FILL SLOPE

NOTES FOR PIPE UNDERDRAIN

1. FOR NEW CONSTRUCTION OR WIDENING PROJECTS, THE PIPE UNDERDRAIN INSTALLATION SHALL OCCUR AFTER SUBGRADE HAS BEEN PREPARED AND AFTER LIFT OF PGE BASE IS PLACED AND BEFORE 3" AND VARIES CA-6 CAPPING STONE IS PLACED. FOR PAVEMENT RUBBLIZATION PROJECTS, THE PIPE UNDERDRAIN SHALL BE INSTALLED PRIOR TO RUBBLIZATION.
2. SUBGRADE AGGREGATE SHALL CONSIST OF A 3" AND VARIES CA-6 CAP ABOVE A PGE BASE, THICKNESS AS NOTED IN THE PLANS.
3. ON SUPERELEVATED CURVES PLACE LONGITUDINAL UNDERDRAIN ON LOW SIDE ONLY.
4. IN AREAS WHERE ROADWAY LONGITUDINAL GRADE IS LESS THAN 0.5%, DIMENSION WILL INCREASE AS NECESSARY TO MAINTAIN MINIMUM 0.5% SLOPE IN PIPE UNDERDRAIN.
5. IF 500' MAXIMUM DISTANCE IS EXCEEDED, PIPE UNDERDRAIN SHALL BE INCREASED TO 8" DIAMETER AND TRENCH WIDTH INCREASED TO 16".
6. AT OUTLET LOCATIONS, PIPE UNDERDRAINS SHALL SEPARATE SUFFICIENTLY TO PROVIDE SPACE FOR TWO CONCRETE SLOPED HEADWALLS, OR TWO PIPES CAN RUN PARALLEL INTO A DOUBLE SLOPED HEADWALL.
7. IN AREAS WHERE A CLOSED DRAINAGE SYSTEM EXISTS, THE PIPE UNDERDRAIN, 6" (OR 8") (SPECIAL) SHALL DRAIN TO THE NEAREST CATCH BASIN. THE UPPER END OF A RUN ON GRADE SHALL ALSO BE CONNECTED TO A CATCH BASIN TO BE USED AS A CLEANOUT.
8. THE OUTLET END OF THE SUBDRAIN SHALL BE PROTECTED BY A PERMANENT RODENT SHIELD. THE RODENT SHIELD SHALL HAVE THE CONFIGURATION SHOWN AND BE CONSTRUCTED FROM HOT DIP GALVANIZED STEEL INDUSTRIAL WIRE CLOTH 3x3 MESH, 0.063"x0.063" WIRE SIZE IN ACCORDANCE WITH AASHTO M232 (ASTM A153).
9. BOTTOM OF SUBGRADE AGGREGATE SLOPE FROM ROADWAY PROFILE GRADE SHALL NOT BE LESS THAN 1.5% TOWARD THE PIPE UNDERDRAIN IN SUPERELEVATED SECTIONS.
10. A CA 16 BACKFILLED TRENCH SHALL BE USED WITH THE INSTALLATION OF A PIPE UNDERDRAIN SYSTEM, EXCEPT THE PERCENT PASSING THE NO. 16 (1.18 mm) SIEVE SHALL BE 4 ± 4 PERCENT.
11. ALL JOINTS IN SLOPE DRAIN SYSTEM SHALL BE WATERTIGHT WITH A WELDED INTERNAL CYLINDER ON THE SPIGOT END OF THE PIPE. FIELD JOINTS SHALL BE WRAPPED WITH A DOUBLE WIDE MARMAC COUPLER, OR EQUIVALENT.
12. IF REQUIRED PIPE UNDERDRAIN SLOPE EXCEEDS 6%, PIPE UNDERDRAIN OUTLET ON HIGH FILL SLOPE DETAIL SHALL APPLY.

MAXIMUM ALLOWABLE DRAINAGE DISTANCE TO OUTLET OR SEPARATION DISTANCE BETWEEN OUTLETS	
ROADWAY PROFILE GRADE (%)	DISTANCE
≤ 1	250 FT.
BETWEEN 1 AND 2	375 FT.
≥ 2	500 FT. (NOTE 5)

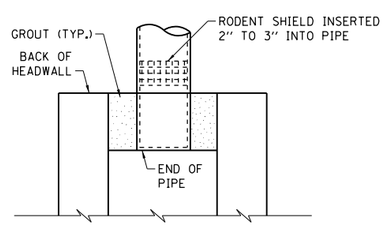

RODENT SHIELD PLACEMENT

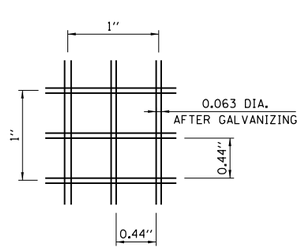

SECTION A-A

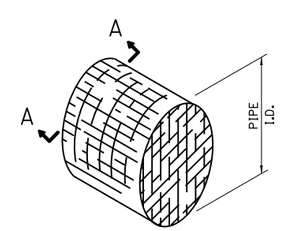

DETAIL OF RODENT SHIELD

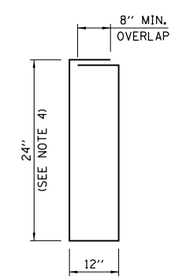

FILTER FABRIC ENVELOPE

DATE	REVISIONS
3-01-2018	ADDED MINIMUM THICKNESS OF CAPPING STONE
3-01-2019	REVISED PIPE UNDERDRAIN OUTLETS TO SHOW 45 DEGREE BENDS OR 90 DEGREE ELBOW. ADDED DETAIL FOR OUTLET AT HIGH FILL SLOPE.
3-01-2020	ADDED COMPOSITE PAVEMENT AS OPTION

Illinois Tollway

PIPE UNDERDRAINS

STANDARD B24-08

Paul Kovacs
APPROVED CHIEF ENGINEERING OFFICER
DATE 6-1-2009

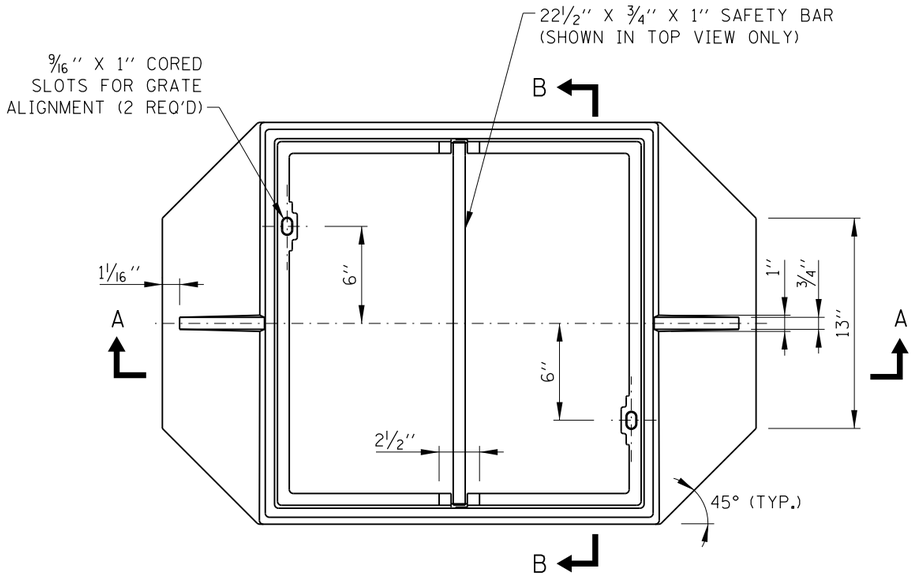

TOP VIEW

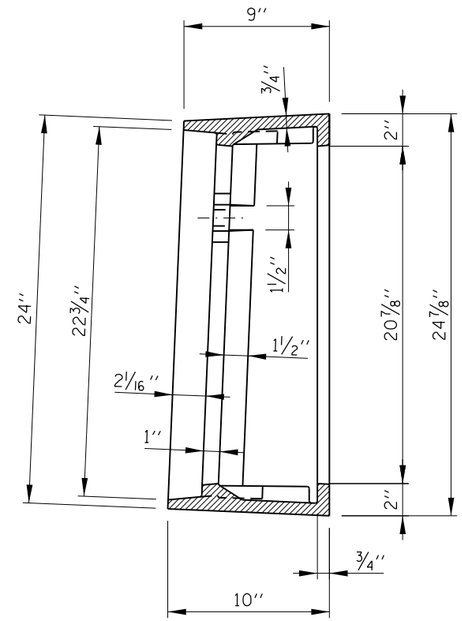

SECTION B-B

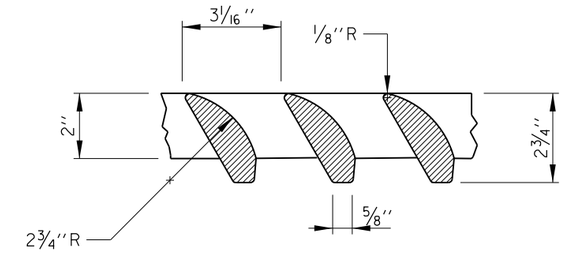

DETAIL OF VANES

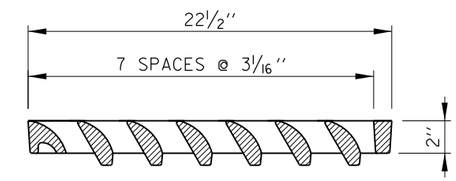

SECTION C-C

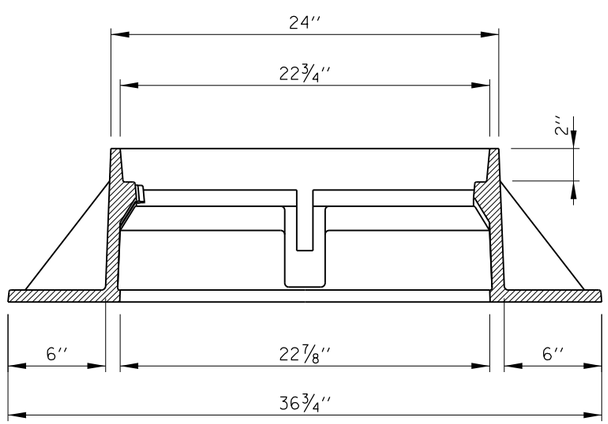

SECTION A-A

CAST FRAME

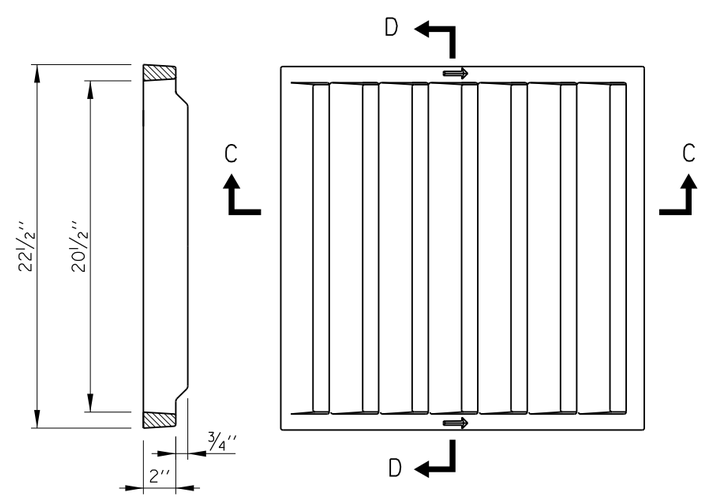

SECTION D-D

TOP VIEW

CAST GRATE

NOTES:

1. ALL FRAMES AND GRATES SHALL CONFORM TO THE REQUIREMENTS OF ART. 1006.14 FOR GRAY IRON CASTINGS AND TO ART. 1006.15 FOR DUCTILE IRON CASTINGS.
2. FRAME AND GRATE TO BE NEENAH FOUNDRY COMPANY, NEENAH NO. R-3528-V, EAST JORDAN IRON WORKS 7535 OR APPROVED EQUAL.
3. GRATE SHALL NOT BE BOLTED TO FRAME.

Paul Kovacs
APPROVED ..... CHIEF ENGINEER
DATE 6-30-2008

Illinois Tollway

DATE	REVISIONS
03-31-14	ADDED FRAME AND GRATE CASTINGS

FRAME AND GRATE
TYPE 20A

STANDARD B25-01

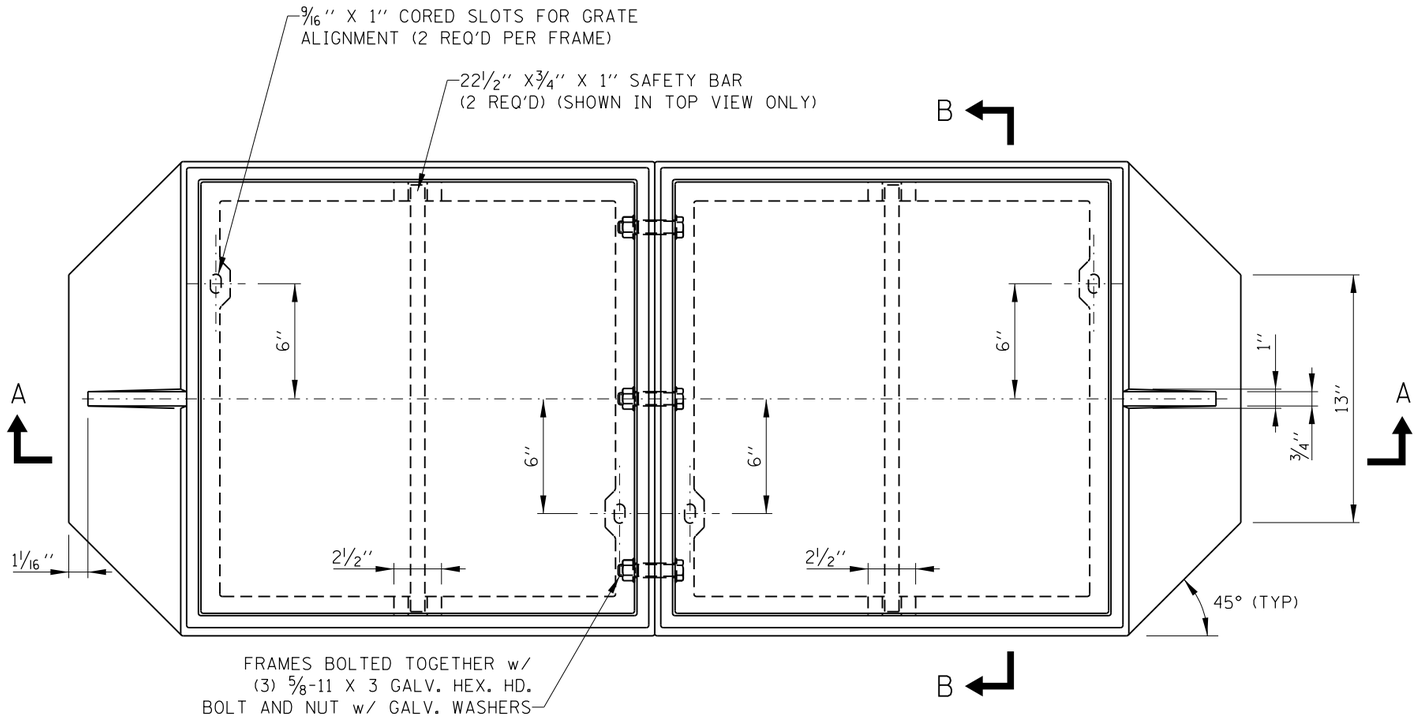

TOP VIEW

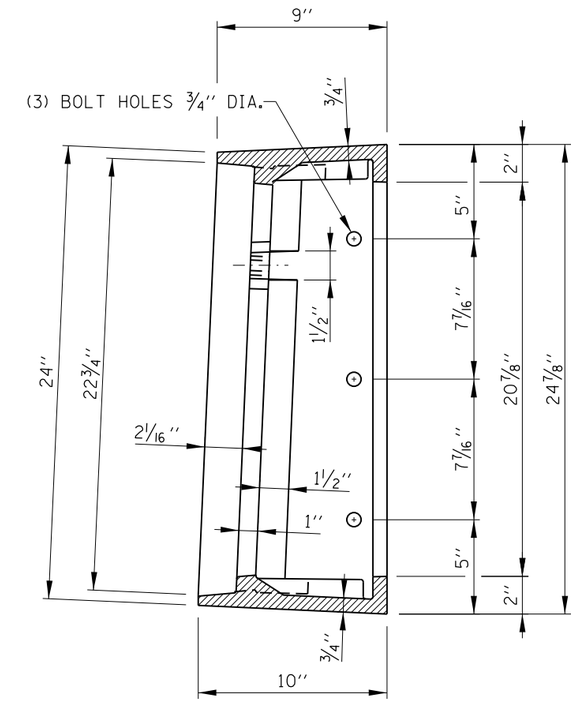

SECTION B-B

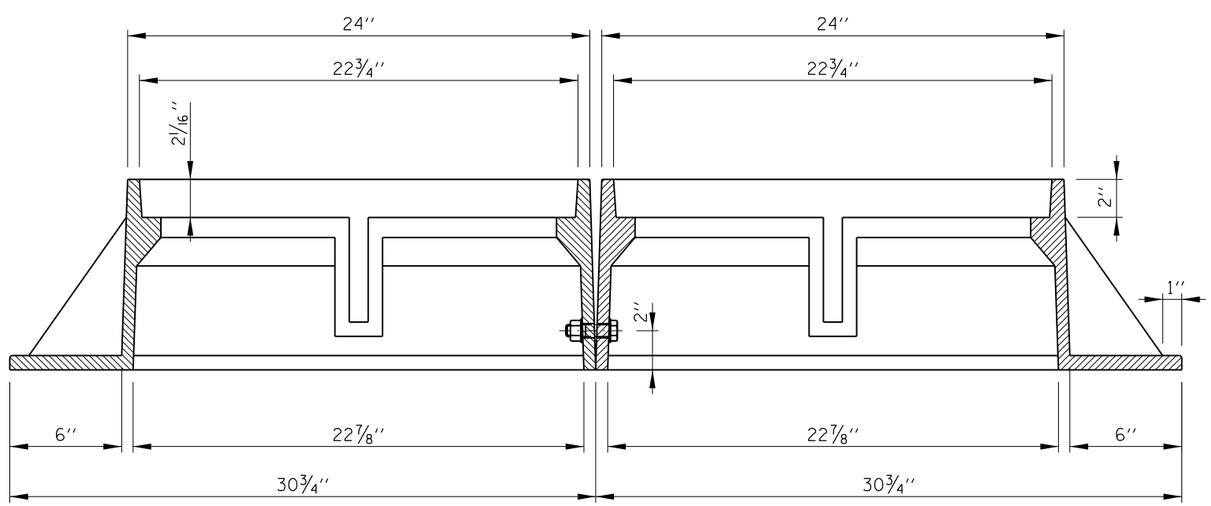

SECTION A-A

CAST FRAME

SHEET 1 OF 2

Illinois Tollway

DATE	REVISIONS
03-31-14	ADDED FRAME AND GRATE CASTINGS

FRAME AND GRATE
TYPE 22A

STANDARD B27-01

Paul Kovacs
APPROVED CHIEF ENGINEER DATE 6-30-2008

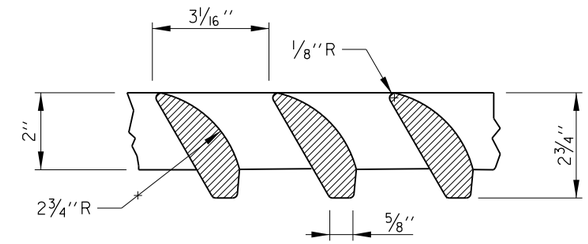

DETAIL OF VANES

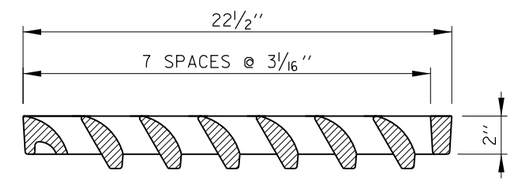

SECTION C-C

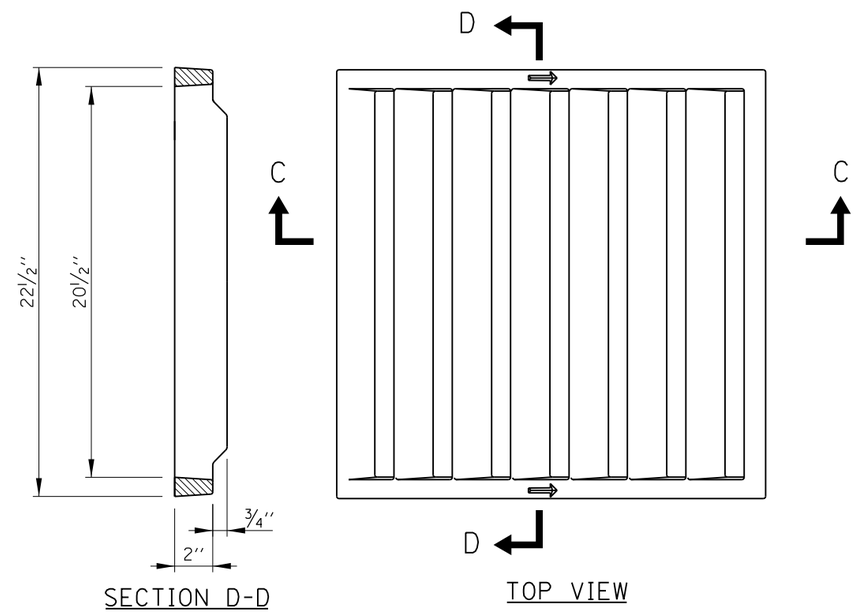

SECTION D-D

TOP VIEW

CAST GRATE

(2 REQ'D)

NOTES:

1. ALL FRAMES AND GRATES SHALL CONFORM TO THE REQUIREMENTS OF ART. 1006.14 FOR GRAY IRON CASTINGS AND TO ART. 1006.15 FOR DUCTILE IRON CASTINGS.

2. FRAME AND GRATE TO BE NEENAH FOUNDRY COMPANY, NEENAH NO. R-3529-V, EAST JORDAN IRON WORKS 7536 OR APPROVED EQUAL.

3. GRATE SHALL NOT BE BOLTED TO FRAME.

Paul Kovacs
APPROVED CHIEF ENGINEER DATE 6-30-2008

SHEET 2 OF 2

Illinois Tollway

FRAME AND GRATE
TYPE 22A

STANDARD B27-01

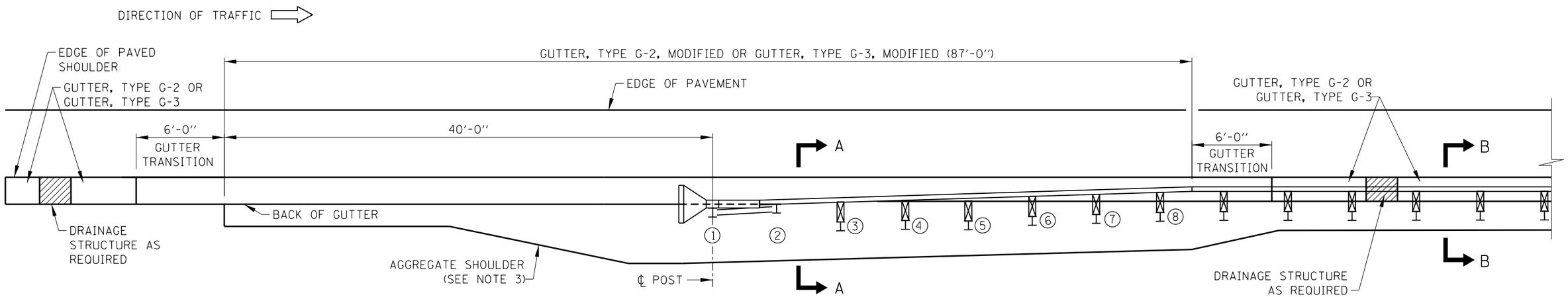

PLAN

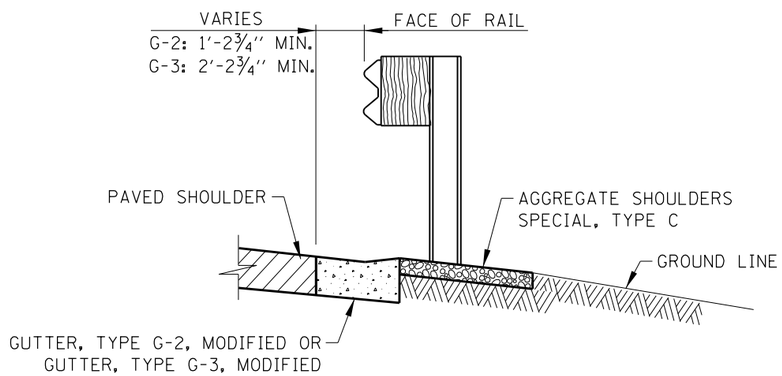

SECTION A-A

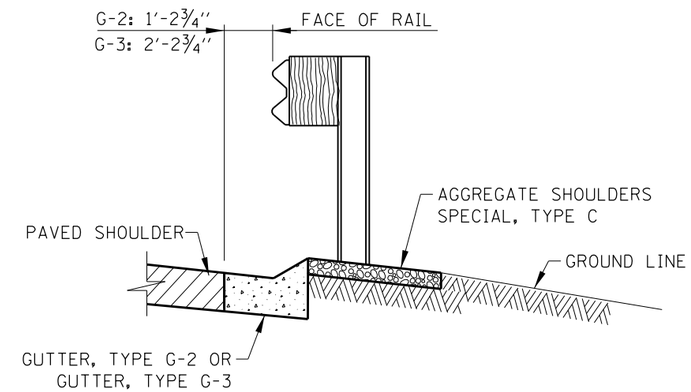

SECTION B-B

GUTTER, TYPE G-2 TRANSITION AND GUTTER, TYPE G-3 TRANSITION AT TRAFFIC BARRIER TERMINAL, TYPE T1 (SPECIAL)

GENERAL NOTES:

1. GUTTER TRANSITIONS SHALL BE PAID FOR PER FOOT AS GUTTER, TYPE G-2 OR GUTTER, TYPE G-3, AS SPECIFIED IN THE PLANS.
2. REFERENCE ILLINOIS TOLLWAY STANDARD DRAWING C1 FOR ADDITIONAL GUARDRAIL INFORMATION.
3. REFERENCE ILLINOIS TOLLWAY STANDARD DRAWING C6 FOR SHOULDER WIDENING INFORMATION.

DATE	REVISIONS
1-01-2011	REVISED GUTTER TRANSITION TERMINATION
3-01-2013	REVISED GUTTER
3-11-2015	REVISED NOTES
3-31-2017	DELETED SHEET 2
3-01-2018	CHANGED LINESTYLE AT WEDGE TO DASHED.

Illinois Tollway

GUTTER TRANSITION AT TRAFFIC BARRIER TERMINAL TYPE T1 (SPECIAL)

STANDARD B28-05

Paul Kovacs
APPROVED CHIEF ENGINEERING OFFICER
DATE 3-1-2010

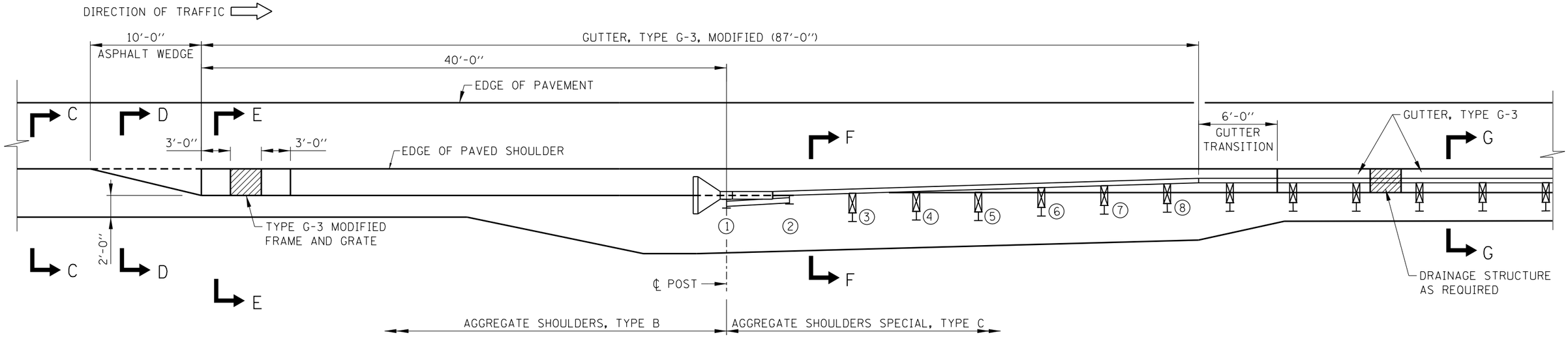

PLAN

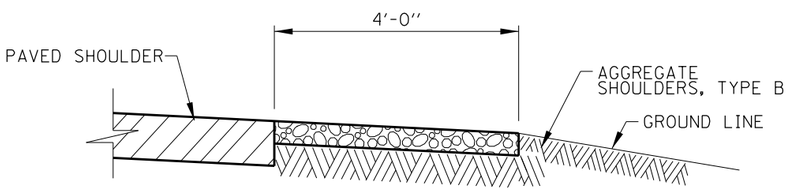

SECTION C-C

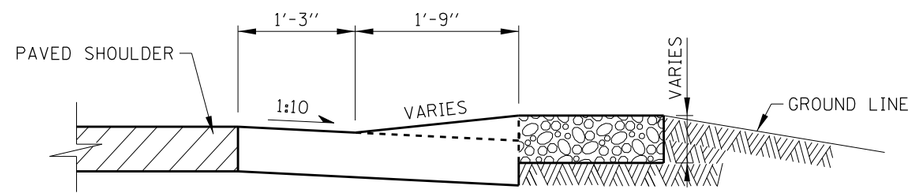

SECTION E-E
GUTTER, TYPE G-3, MODIFIED TRANSITION

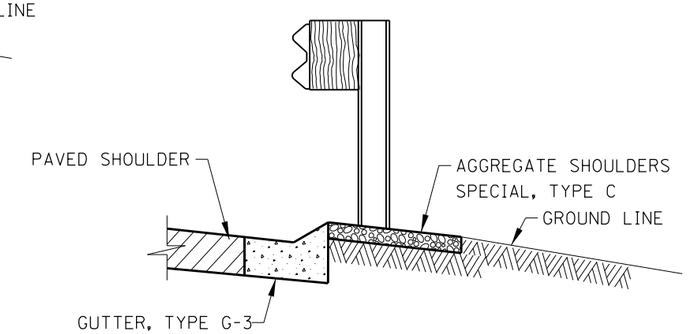

SECTION G-G

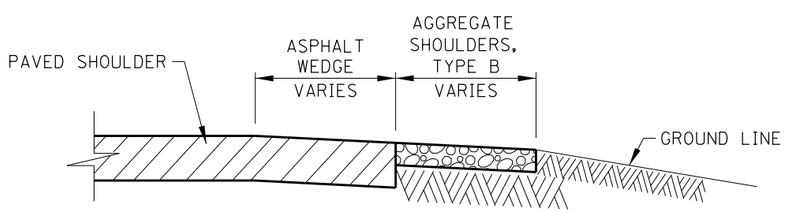

SECTION D-D
ASPHALT SHOULDER TRANSITION

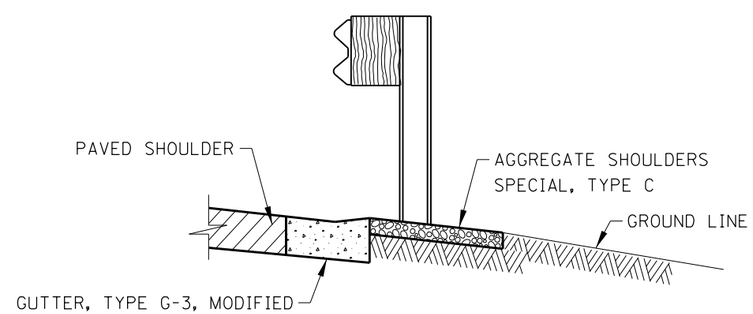

SECTION F-F

NOTE:

SEE SHEET 1 OF THIS SERIES FOR NOTES

SHEET 2 OF 2

GUTTER, TYPE G-3 TRANSITION TERMINATION AT TRAFFIC BARRIER TERMINAL, TYPE T1 (SPECIAL)

Illinois Tollway

GUTTER TRANSITION AT TRAFFIC BARRIER TERMINAL TYPE T1 (SPECIAL)

STANDARD B28-05

Paul Kovacs
APPROVED ..... CHIEF ENGINEERING OFFICER
DATE 3-1-2010

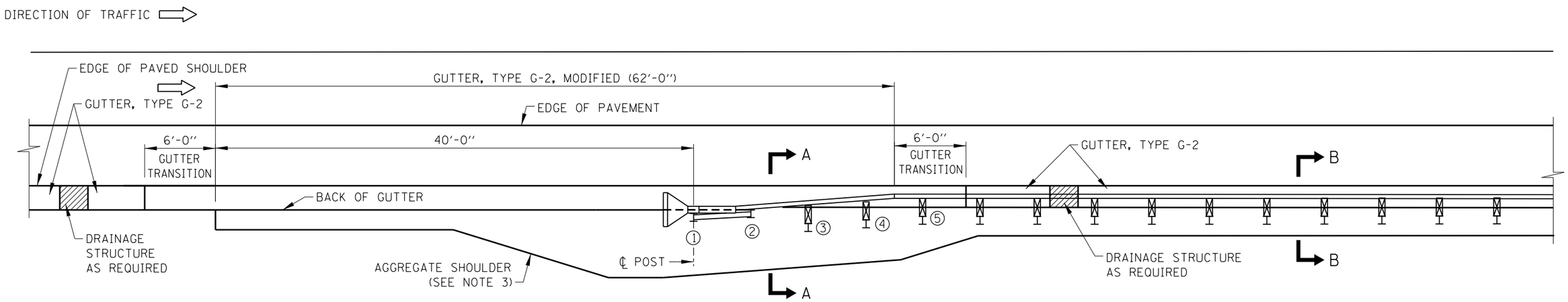

PLAN

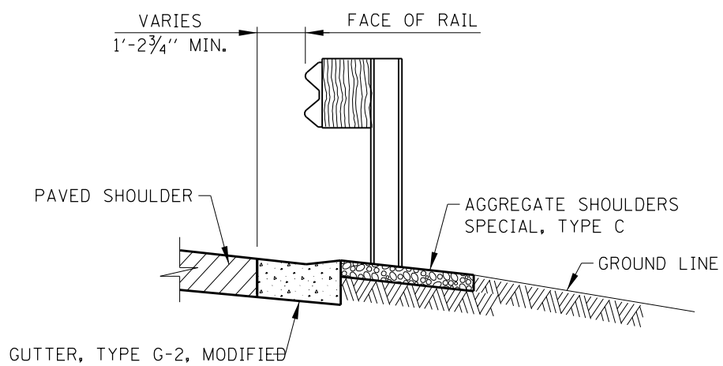

SECTION A-A

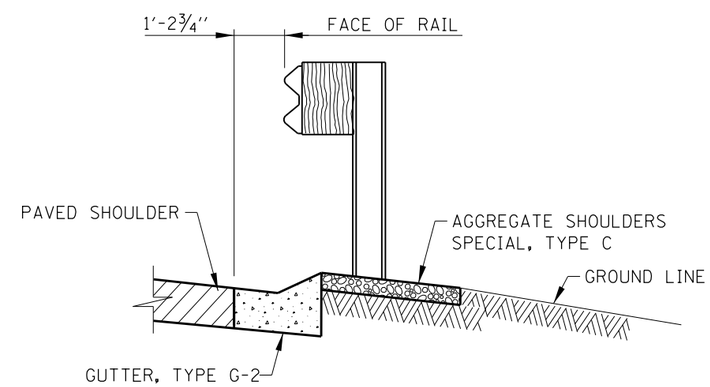

SECTION B-B

GUTTER, TYPE G-2 TRANSITION AT TRAFFIC BARRIER TERMINAL, TYPE T1-A (SPECIAL)

GENERAL NOTES:

1. GUTTER TRANSITIONS SHALL BE PAID FOR PER FOOT AS GUTTER, TYPE G-2 OR AS SPECIFIED IN THE PLANS.
2. REFERENCE ILLINOIS TOLLWAY STANDARD DRAWING C1 FOR ADDITIONAL GUARDRAIL INFORMATION.
3. REFERENCE ILLINOIS TOLLWAY STANDARD DRAWING C12 FOR SHOULDER WIDENING INFORMATION.

Paul Kovacs
APPROVED CHIEF ENGINEER DATE 1-1-2011

DATE	REVISIONS
3-01-2013	REVISED GUTTER
3-11-2015	REVISED NOTES
3-31-2017	REMOVED SHLDR DIMS

Illinois Tollway

GUTTER TRANSITION AT TRAFFIC BARRIER TERMINAL TYPE T1-A (SPECIAL)

STANDARD B29-03

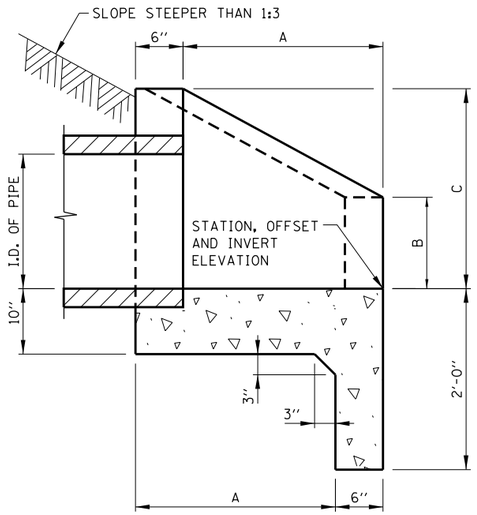

SECTION A-A

(DIMENSIONS)

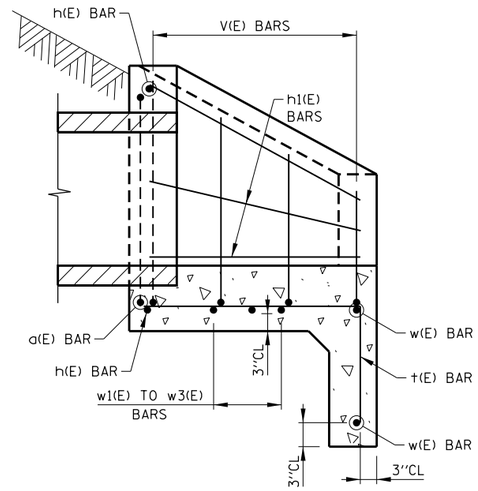

SECTION A-A

(REINFORCEMENT)

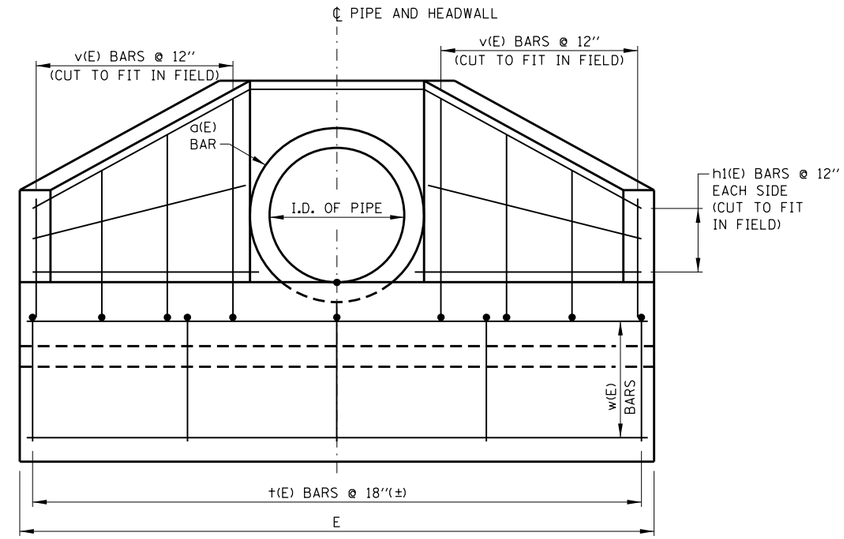

FRONT ELEVATION

NOTES:

1. SLOPED HEADWALL TYPES I AND II SHALL BE CONSTRUCTED FLUSH WITH EXISTING OR PROPOSED SLOPE.
2. CLASS SI CONCRETE SHALL BE USED THROUGHOUT.
3. ALL REINFORCEMENT BARS SHOWN SHALL BE EPOXY COATED (E).
4. BAR BENDING DETAILS ARE DIMENSIONED OUT TO OUT OF BARS.
5. ALL EXPOSED EDGES SHALL HAVE A ¾''-45° CHAMFER. CHAMFER ON VERTICAL EDGES SHALL BE CONTINUED A MINIMUM OF ONE FOOT BELOW THE FINISHED GROUND LINE.
6. COVER FROM THE FACE OF CONCRETE TO FACE OF REINFORCEMENT BAR SHALL BE 3'' FOR SURFACES FORMED AGAINST EARTH AND 2'' FOR ALL OTHER SURFACES UNLESS OTHERWISE SHOWN.
7. CARE SHALL BE EXERCISED IN REMOVING ANY LENGTH OF EXISTING PIPE SO THE REMAINING PIPE IS UNDAMAGED AND FULLY FUNCTIONING.
8. ALL SLOPES ARE EXPRESSED AS UNITS OF VERTICAL DISPLACEMENT TO UNITS OF HORIZONTAL DISPLACEMENT.
9. TYPES I AND II HEADWALLS TO BE USED ONLY FOR SLOPES STEEPER THAN 1:3. DIMENSIONS AND QUANTITIES ARE BASES ON A SLOPE 1:2.
10. I.D. DENOTES INSIDE DIAMETER OF PIPE. O.D. DENOTES OUTSIDE DIAMETER OF PIPE.
11. FOR EROSION PROTECTION SEE STANDARD B19.

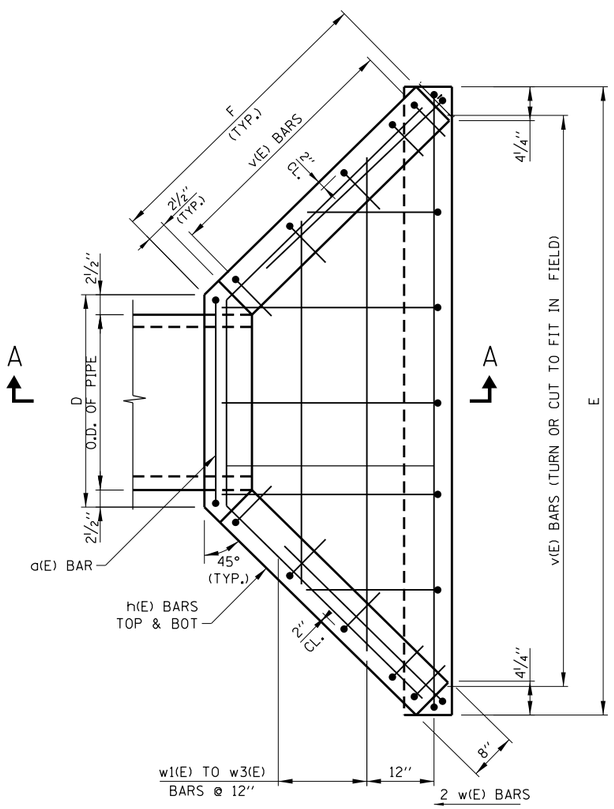

PLAN

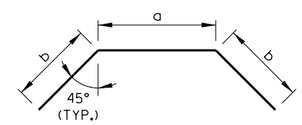

h(E) BARS

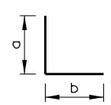

v(E) - BARS

t(E) - BARS

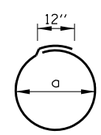

a(E) BARS

TABLE OF DIMENSIONS AND QUANTITIES FOR ONE HEADWALL

INSIDE DIA.OF PIPE	SLOPE OF FILL	DIMENSIONS						CONCRETE CLASS SI	REINF. BARS (POUND)
		A	B	C	D	E	F		
21''	1:3	2'-6''	1'-2''	2'-6''	2'-8''	7'-11½''	3'-6½''	1.6 C.Y.	75
24''	1:3	2'-10''	1'-4''	2'-9''	2'-11''	8'-10½''	4'-2½''	2.1 C.Y.	80
27''	1:3	3'-2''	1'-8''	3'-0''	3'-3''	9'-7''	4'-5¾''	2.0 C.Y.	100
30''	1:3	3'-4''	1'-7''	3'-3''	3'-6''	10'-5½''	4'-11''	2.7 C.Y.	120
36''	1:3	4'-0''	1'-10''	3'-10''	4'-1''	12'-4½''	5'-10½''	3.6 C.Y.	145

TABLE OF REINFORCING STEEL FOR ONE HEADWALL

BAR		21'' I.D. PIPE				24'' I.D. PIPE				27'' I.D. PIPE				30'' I.D. PIPE				36'' I.D. PIPE			
MARK (E)	SIZE	NO.	LENGTH	a	b	NO.	LENGTH	a	b	NO.	LENGTH	a	b	NO.	LENGTH	a	b	NO.	LENGTH	a	b
a	#4	1	9'-3''	31½''	-	1	10'-2''	2'-11''	-	1	11'-1''	3'-2½''	-	1	12'-0''	3'-6''	-	1	13'-10''	4'-1''	-
h	#4	2	8'-7''	2'-3''	3'-2''	2	10'-2''	2'-6''	3'-10''	2	11'-0''	2'-10''	4'-1''	2	9'-5''	3'-1''	3'-2''	2	11'-0''	3'-8''	4'-1''
h1	#4	4	3'-2''	-	-	4	3'-10''	-	-	4	4'-2''	-	-	5	4'-7''	-	-	6	5'-6''	-	-
v	#4	6	4'-0''	1'-0''	3'-0''	8	4'-3''	1'-0''	3'-3''	8	4'-6''	1'-0''	3'-6''	10	4'-9''	1'-0''	3'-9''	10	5'-4''	1'-0''	4'-4''
t	#4	6	4'-0''	1'-6''	2'-6''	6	4'-3''	1'-6''	2'-9''	6	4'-8''	1'-6''	3'-1''	7	4'-10''	1'-6''	3'-4''	8	5'-4''	1'-6''	3'-10''
w	#4	2	7'-7''	-	-	2	8'-6''	-	-	2	10'-1''	-	-	2	10'-0''	-	-	2	12'-0''	-	-
w1	#4	1	6'-0''	-	-	1	6'-11''	-	-	1	7'-11''	-	-	1	8'-7''	-	-	1	10'-6''	-	-
w2	#4	1		-	-	1	4'-11''	-	-	1	5'-11''	-	-	1	6'-7''	-	-	1	8'-6''	-	-
w3	#4	-	-	-	-	-	-	-	-	-	-	-	-	1	4'-7''	-	-	1	7'-6''	-	-

SHEET 1 OF 2

HEADWALL - TYPE I

(PIPE DIAMETER ≤36'')

Paul Kovacs
APPROVED CHIEF ENGINEER DATE 2-7-2012

DATE	REVISIONS
2-07-2012	ADDED 21'' AND 27'' DIA
	PIPE AND REVISED TABLE
	QUANTITIES
3-11-2015	REVISED NOTES

Illinois Tollway

HEADWALLS
TYPE I AND II

STANDARD B30-02

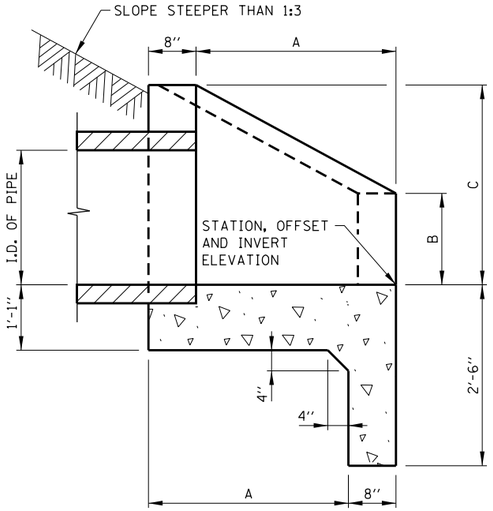

SECTION A-A

(DIMENSIONS)

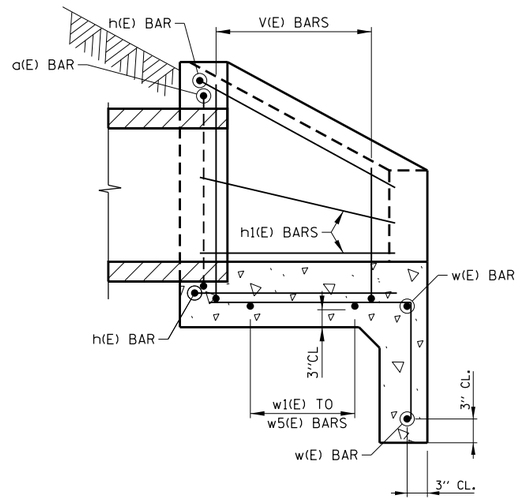

SECTION A-A

(REINFORCEMENT)

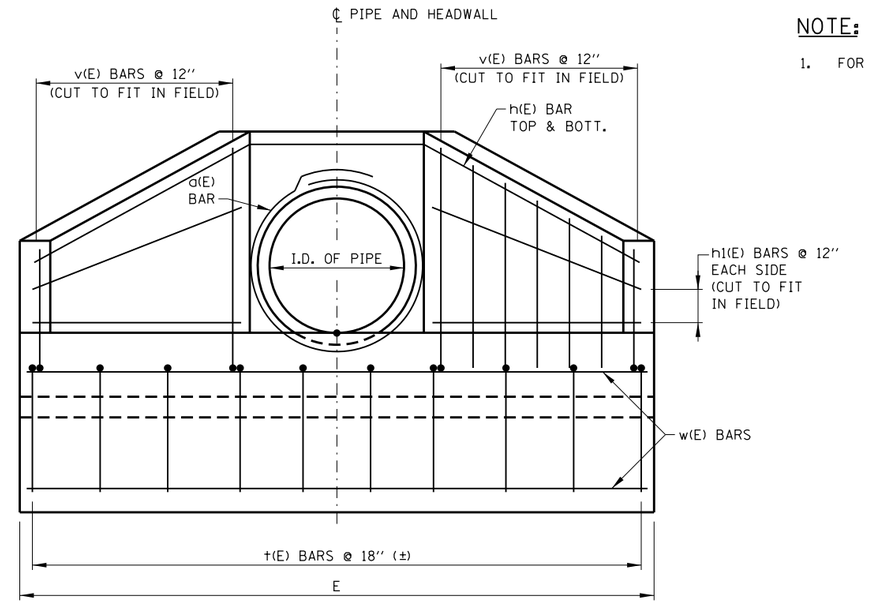

FRONT ELEVATION

NOTE:

1. FOR ADDITIONAL NOTES SEE SHEET 1 IN THIS SERIES.

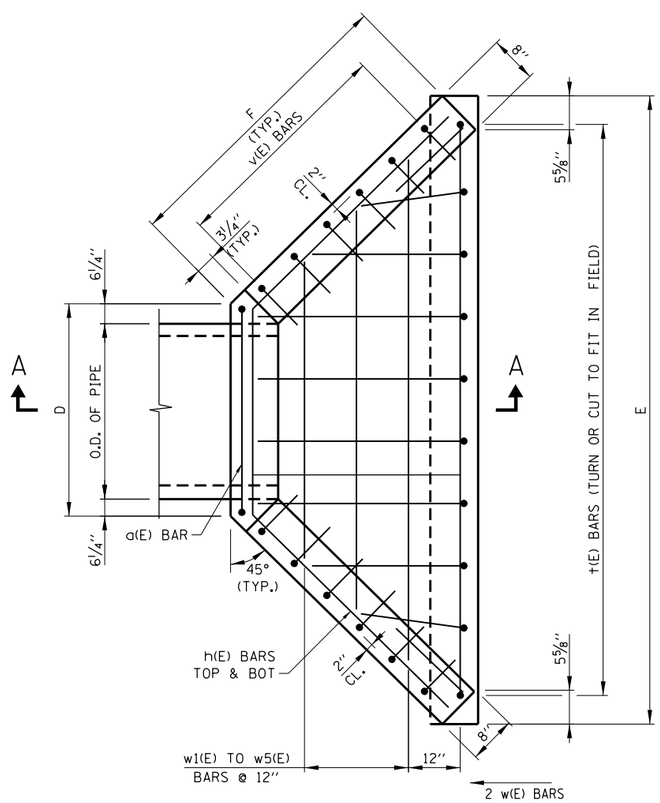

PLAN

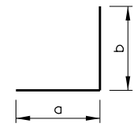

v(E) BARS

t(E) BARS

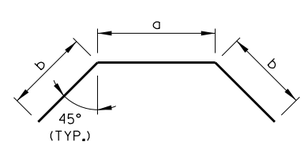

h(E) BARS

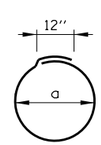

a(E) BARS

HEADWALL - TYPE II

(PIPE DIAMETER ≥36'')

TABLE OF BARS FOR ONE HEADWALL

BAR		42'' PIPE				48'' PIPE				54'' I.D. PIPE				60'' I.D. PIPE			
MARK (E)	SIZE	NO.	LENGTH	a	b	NO.	LENGTH	a	b	NO.	LENGTH	a	b	NO.	LENGTH	a	b
a	#5	2	15'-11''	4'-9''	-	2	17'-9''	5'-4''	-	2	19'-7''	5'-11''	-	2	21'-5''	6'-6''	-
h	#5	2	17'-7''	5'-3''	6'-2''	2	19'-9''	5'-9''	7'-0''	2	22'-0''	6'-4''	7'-10''	2	24'-1''	6'-9''	8'-8''
h1	#5	8	6'-6''	-	-	10	7'-4''	-	-	10	8'-2''	-	-	12	9'-0''	-	-
t	#5	10	6'-1''	1'-6''	4'-7''	11	6'-8''	1'-6''	5'-2''	13	7'-3''	1'-6''	5'-9''	15	7'-10''	1'-6''	6'-4''
v	#5	14	5'-10''	1'-0''	4'-10''	16	6'-6''	1'-0''	5'-6''	16	7'-1''	1'-0''	6'-1''	18	7'-8''	1'-0''	6'-8''
w	#5	2	14'-3''	-	-	2	15'-10''	-	-	2	17'-8''	-	-	2	18'-10''	-	-
w1	#5	1	12'-0''	-	-	1	13'-8''	-	-	1	15'-2''	-	-	1	16'-10''	-	-
w2	#5	1	10'-0''	-	-	1	11'-8''	-	-	1	13'-4''	-	-	1	15'-0''	-	-
w3	#5	1	8'-0''	-	-	1	9'-8''	-	-	1	11'-6''	-	-	1	13'-2''	-	-
w4	#5	-	-	-	-	1	8'-0''	-	-	1	9'-8''	-	-	1	11'-4''	-	-
w5	#5	-	-	-	-	-	-	-	-	-	7'-8''	-	-	1	9'-6''	-	-

TABLE OF DIMENSIONS AND QUANTITIES FOR ONE HEADWALL

INSIDE DIA.OF PIPE	SLOPE OF FILL	DIMENSIONS						CONCRETE CLASS SI	REINF. BARS (POUND)
		A	B	C	D	E	F		
42''	1:3	4'-5''	2'-2''	4'-4 1/2''	5'-6''	14'-9''	6'-6 1/4''	3.8 C.Y.	400
48''	1:3	5'-0''	2'-5''	4'-11''	6'-0''	16'-4 3/4''	7'-4 1/4''	4.1 C.Y.	450
54''	1:3	5'-7''	2'-8''	5'-5 1/2''	6'-7''	18'-1 3/4''	8'-2''	5.6 C.Y.	500
60''	1:3	6'-2''	2'-11''	6'-0''	7'-0''	19'-2 3/4''	9'-0''	6.5 C.Y.	600

Illinois Tollway

HEADWALLS
TYPE I AND II

STANDARD B30-02

Paul Kovacs
APPROVED CHIEF ENGINEER DATE 2-7-2012

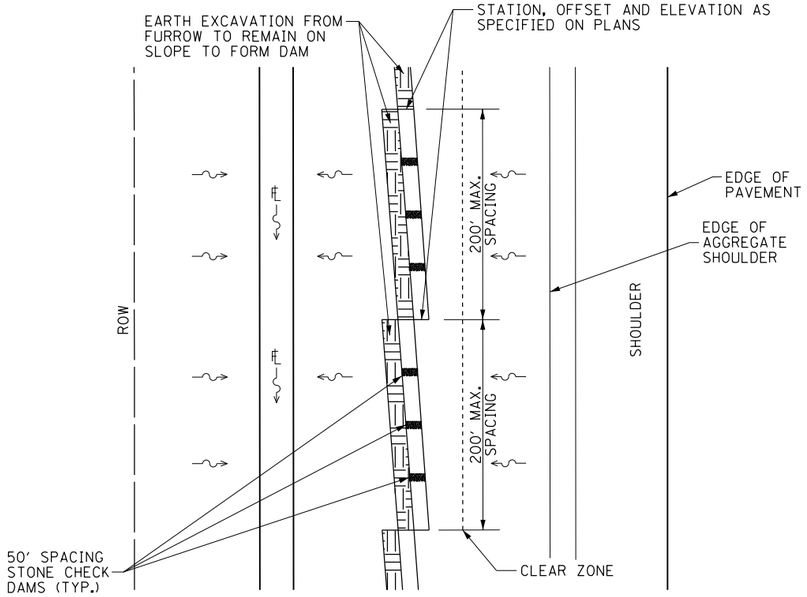

DEFINED CLEAR ZONE LOCATIONS

PLAN VIEW: NOT TO SCALE

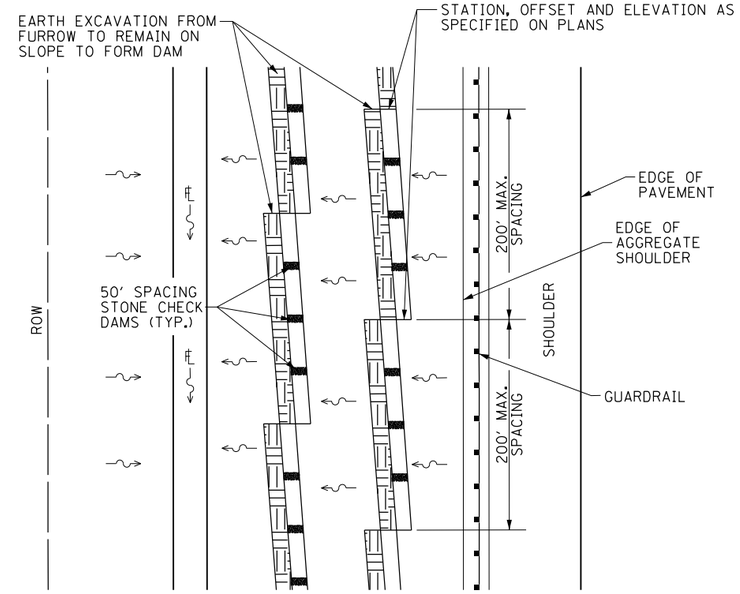

SHIELDED LOCATIONS

PLAN VIEW: NOT TO SCALE

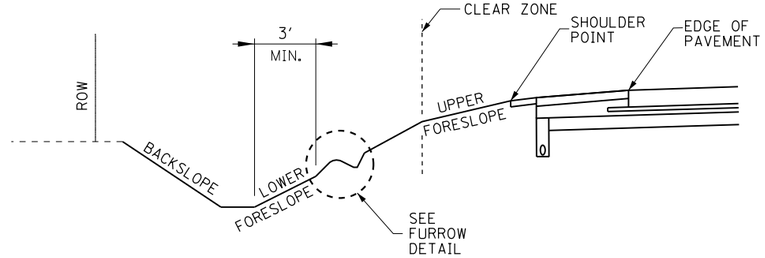

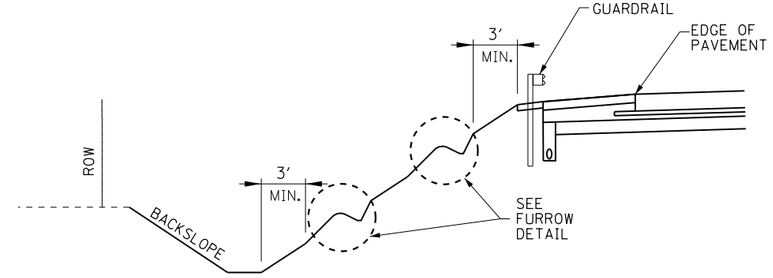

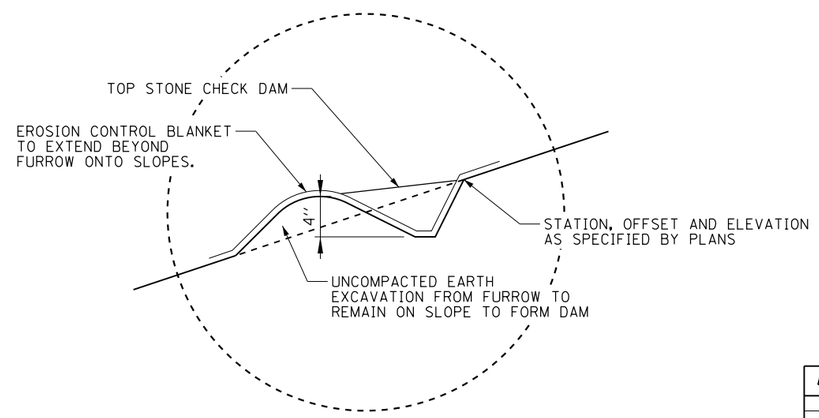

FURROW DETAIL

SECTION VIEW: NOT TO SCALE

NOTES:

1. INSTALL STONE CHECK DAMS AT 50' SPACING ALONG FURROW. STONE CHECK DAMS TO CONSIST OF CA-7 STONE, 2' LONG, FILLED TO FULL DEPTH OF FURROW
2. FURROW TO BE SLICED/TILLED ALONG LEVEL CONTOUR BEGINNING.
3. FURROWS SHALL NOT BE INSTALLED IN UNSHIELDED, UNDEFINED CLEAR ZONE LOCATIONS.

Illinois Tollway

DATE	REVISIONS

FURROW DETAIL

STANDARD B31-00

Paul Kovacs
APPROVED ..... CHIEF ENGINEER
DATE 3-31-2016

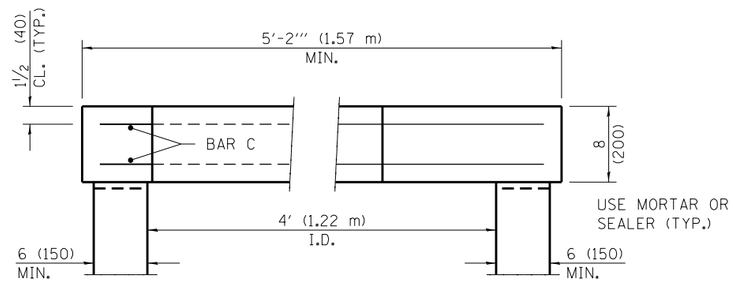

SECTION A-A

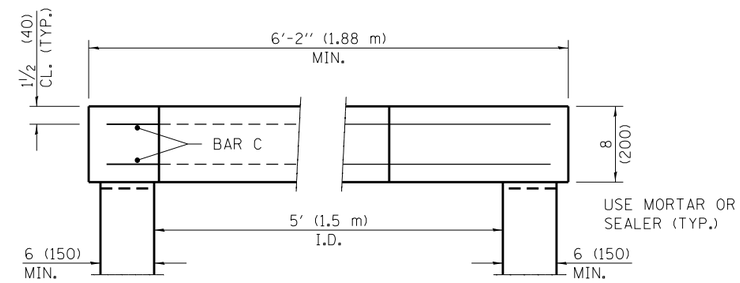

SECTION B-B

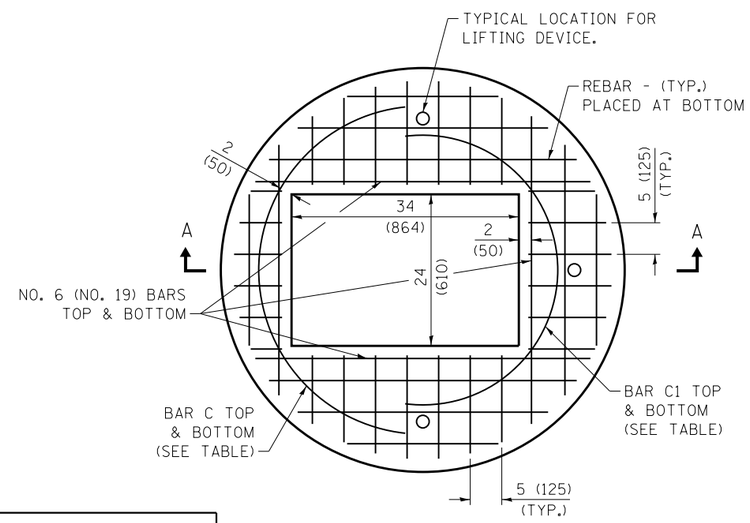

4' MANHOLE PLAN

SHOWING REBAR REINFORCEMENT
NO. 6 (NO. 19) UNLESS OTHERWISE SHOWN

NO. 4 (NO. 13)		
BAR	LENGTH	RADIUS
C	6'-6'' (1.98 m)	26 (660)
C1	6'-6'' (1.98 m)	22 (59)

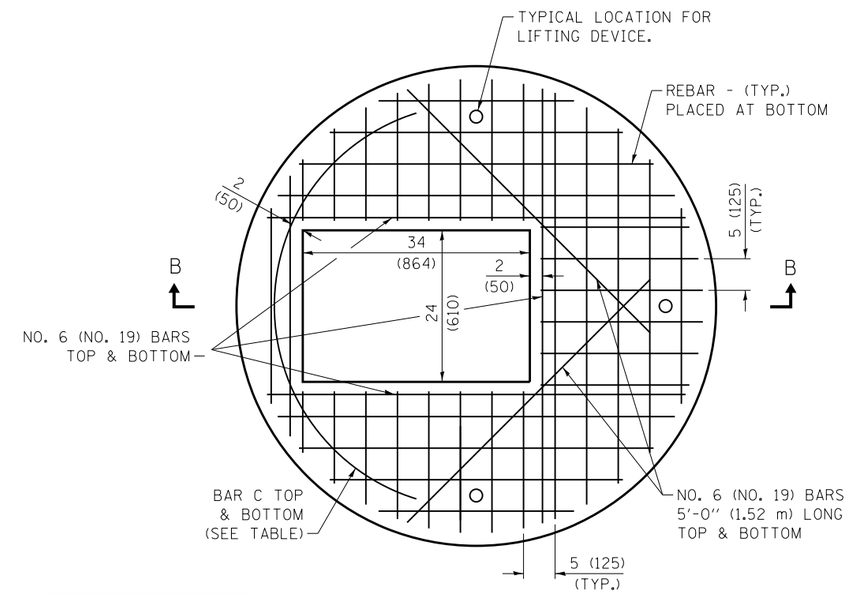

5' MANHOLE PLAN

SHOWING REBAR REINFORCEMENT
NO. 6 (NO. 19) UNLESS OTHERWISE SHOWN

NO. 4 (NO. 13) BAR C	
LENGTH	RADIUS
7'-0'' (2.13 m)	32 (813)

SHEET 1 OF 3

Illinois Tollway

DATE	REVISIONS

FLAT SLAB TOP
4' (1.2 m) & 5' (1.5 m)
DIAMETER

STANDARD B32-00

Paul Kovacs
APPROVED CHIEF ENGINEER
DATE 3-31-2017

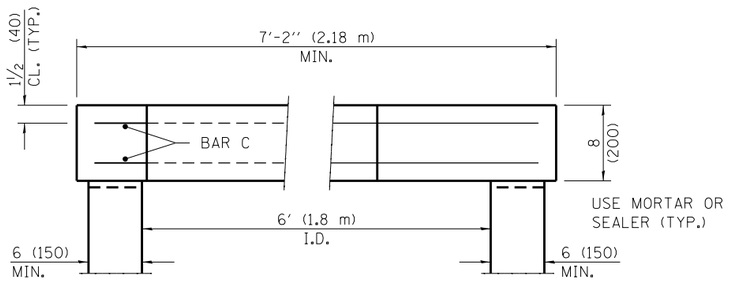

SECTION A-A

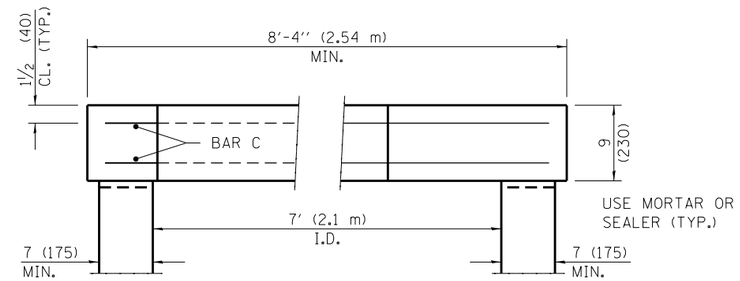

SECTION B-B

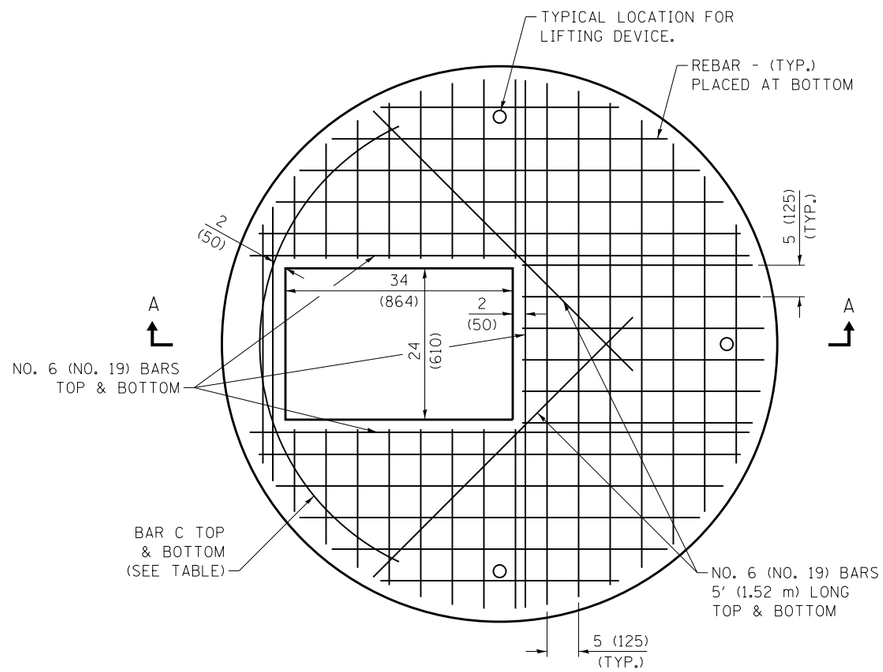

NO. 4 (NO. 13) BAR C	
LENGTH	RADIUS
7′-6″ (2.29 m)	38 (965)

6′ MANHOLE PLAN

SHOWING REBAR REINFORCEMENT
NO. 6 (NO. 19) UNLESS OTHERWISE SHOWN

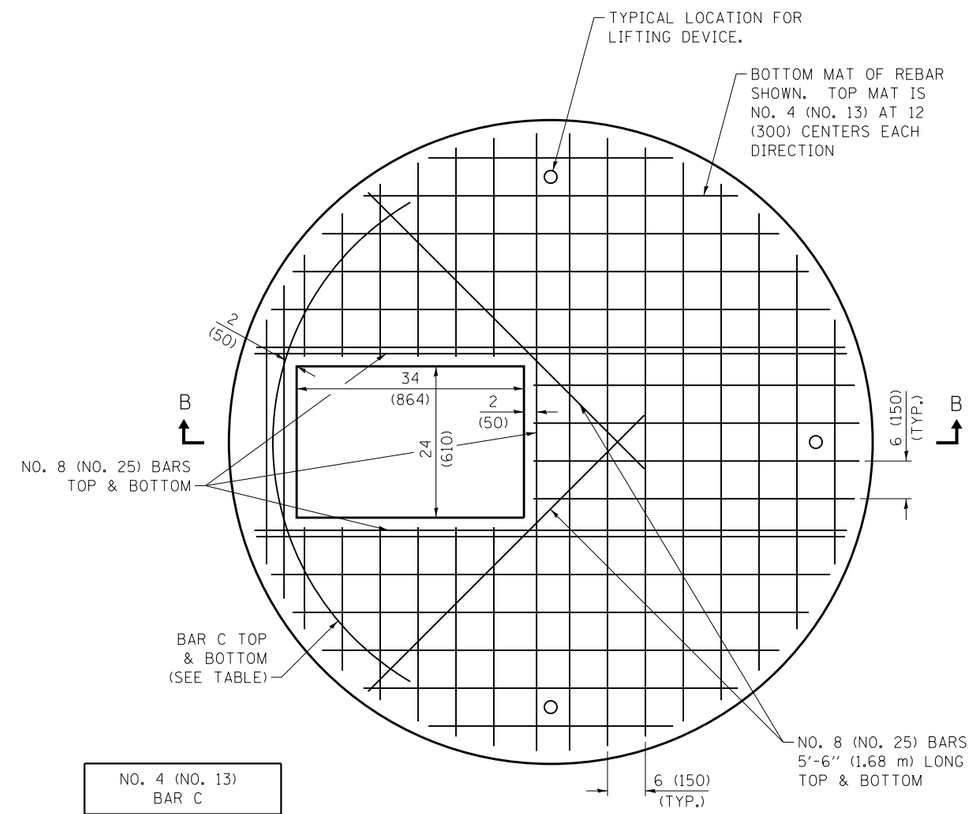

NO. 4 (NO. 13) BAR C	
LENGTH	RADIUS
8′-0″ (2.44 m)	3′-8″ (1.12 m)

7′ MANHOLE PLAN

SHOWING REBAR REINFORCEMENT
NO. 8 (NO. 25) UNLESS OTHERWISE SHOWN

SHEET 2 OF 3

Illinois Tollway

DATE	REVISIONS

FLAT SLAB TOP
6′ (1.8 m) & 7′ (2.1 m)
DIAMETER

STANDARD B32-00

Paul Kovacs
APPROVED CHIEF ENGINEER
DATE 3-31-2017

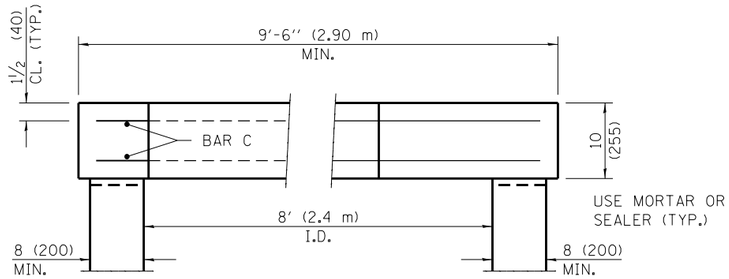

SECTION A-A

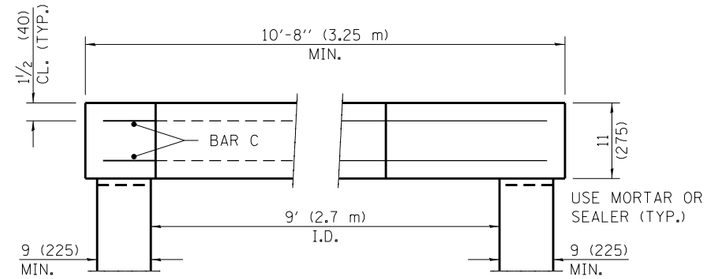

SECTION B-B

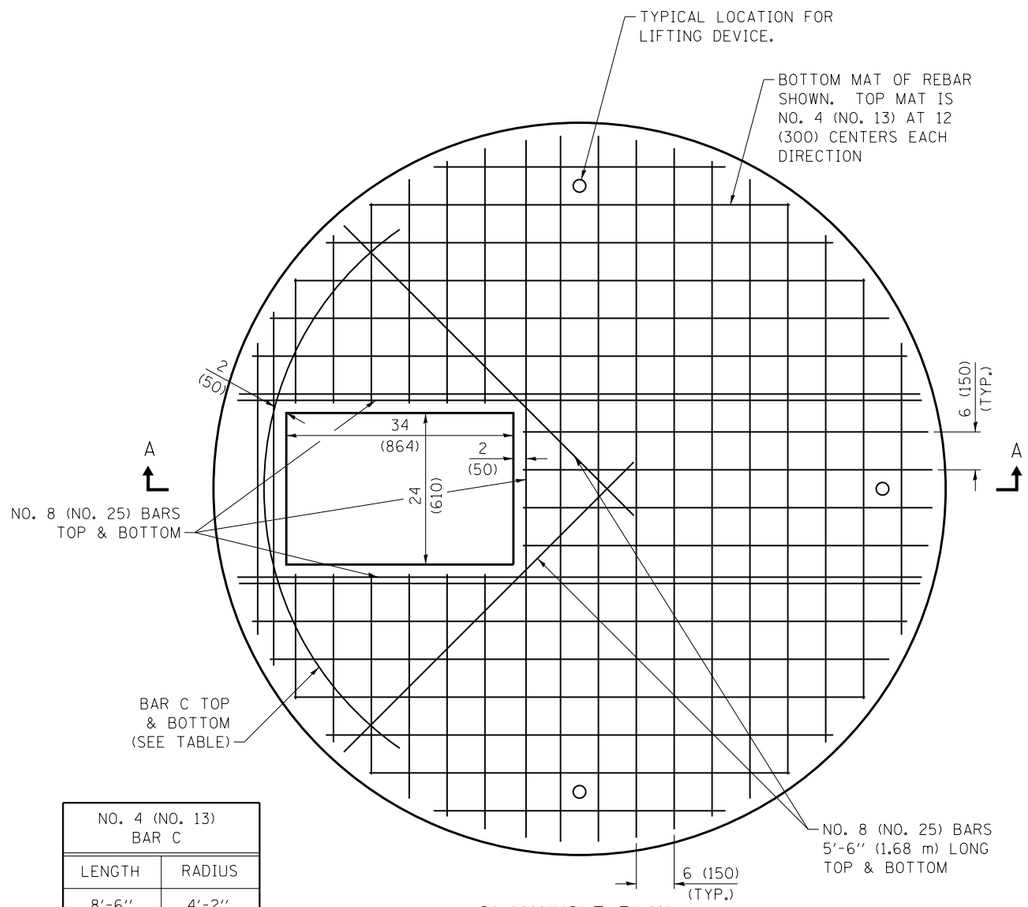

NO. 4 (NO. 13) BAR C	
LENGTH	RADIUS
8′-6″ (2.59 m)	4′-2″ (1.27 m)

8′ MANHOLE PLAN

SHOWING REBAR REINFORCEMENT
NO. 8 (NO. 25) UNLESS OTHERWISE SHOWN

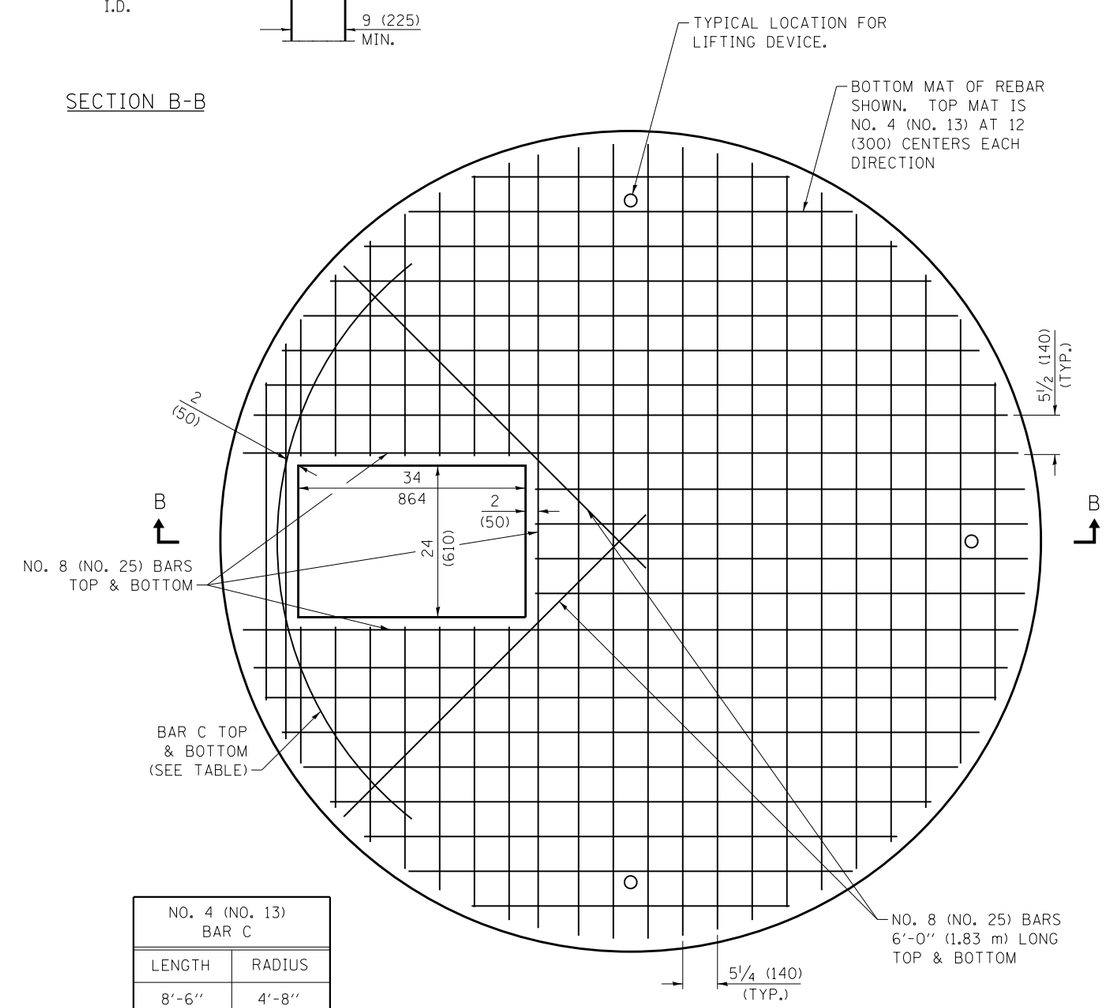

NO. 4 (NO. 13) BAR C	
LENGTH	RADIUS
8′-6″ (2.59 m)	4′-8″ (1.42 m)

9′ MANHOLE PLAN

SHOWING REBAR REINFORCEMENT
NO. 8 (NO. 25) UNLESS OTHERWISE SHOWN

SHEET 3 OF 3

Illinois Tollway

DATE	REVISIONS

FLAT SLAB TOP
8′ (2.4 m) & 9′ (2.7 m)
DIAMETER

STANDARD B32-00

Paul Kovacs
APPROVED CHIEF ENGINEER
DATE 3-31-2017