Illinois Tollway Standard Drawing Revisions

Section H	Roadway Lighting	
	Standard	**Modification Summary** **Effective: 03-31-2016**
	All	**The electronic (pdf) version of the Standard Drawings are now made searchable (text).**
	H1	**Light Standard Foundation**
		Anchor bolts to be hot dipped galvanized full length.
		Changed ground conductor clamp to ground rod to "exothermic weld".
	Sheet 2	Added requirement for use of 10'-0" helix, when ground slope is steeper than 1:3 (V:H)
	H2	**Light Standard Details**
	Sheet 1	Removed mast arm riser dimension for twin mast arm units.
	Sheet 2	Modified barrier wall mounted unit detail for double-nut leveling.
		Modified Detail A to include details for double-nut barrier wall installations.
		Relocated handhole location on median barrier and structural parapet wall mounted units per Tollway Maintenance.
	Sheet 3	Replaced insulated joint with conductor splice in accordance with supplemental specification.
	H4	**Heavy Duty Handhole and Buried Wiring Details**
		Cover changed to hinged design with a lift assist mechanism and hold open safety arm.
		Added text "ELECTRIC" to lid.
	H5	**Service Pole and Pedestal Details**
		Revised conduit depth from 30" minimum to 33" minimum.
	H6	**Exterior Control Console Details**
		Reduced meter housing height above grade from 6'-0" to 5'-0" maximum.
	H8	**Interior Control Console Details**
		Reduced meter housing height above grade from 6'-0" to 5'-0" maximum.
	H9	**Underpass Lighting Installation Details**
	Sheet 1-2	Median Pier Mounted Luminaire and Feeder Installation
	Sheet 3	Bridge Deck Suspended Luminaire and Miscellaneous Details

New Sheet Retired Standard

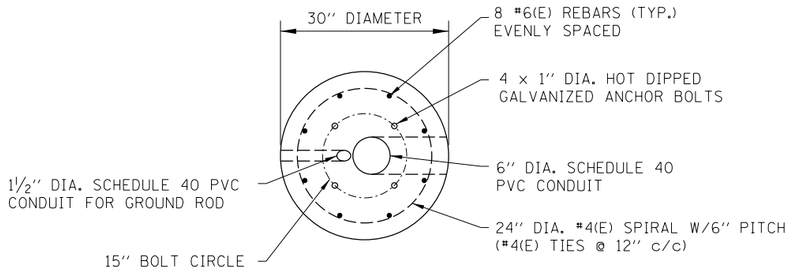

PLAN

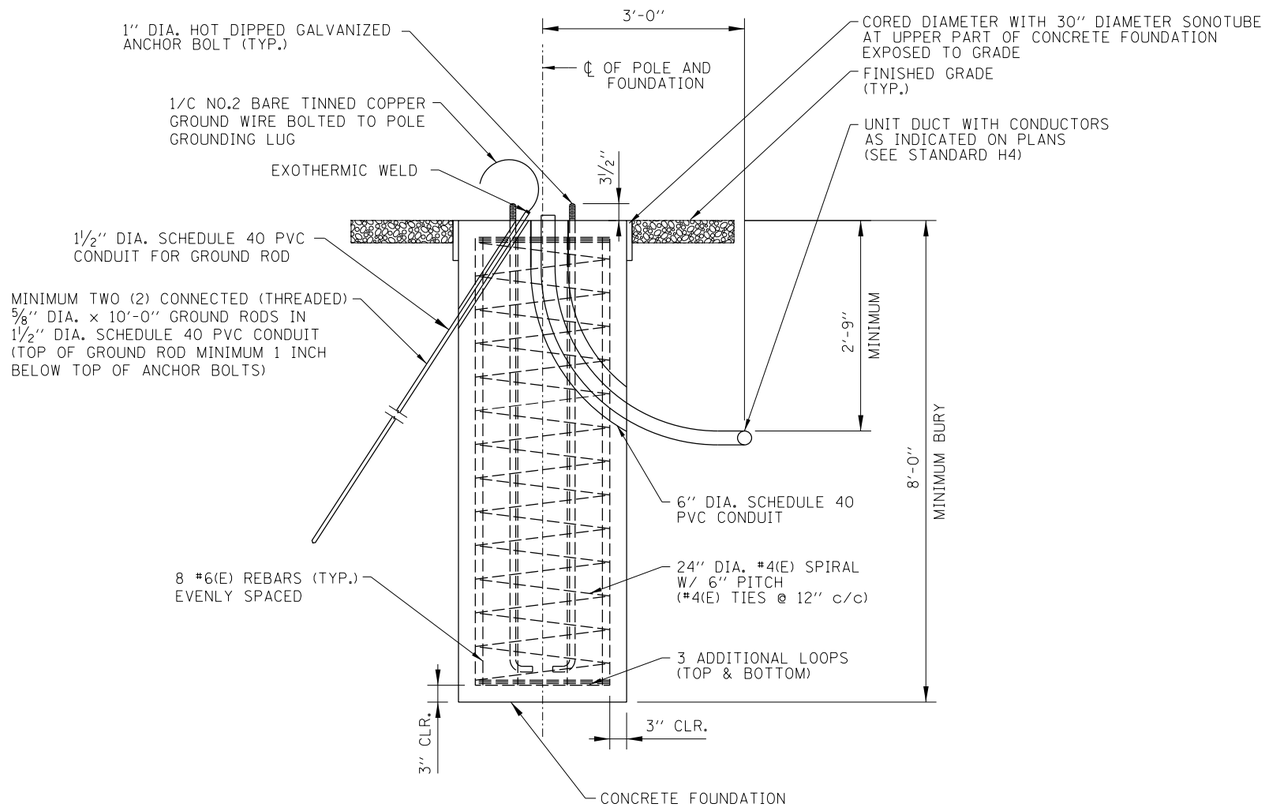

ELEVATION

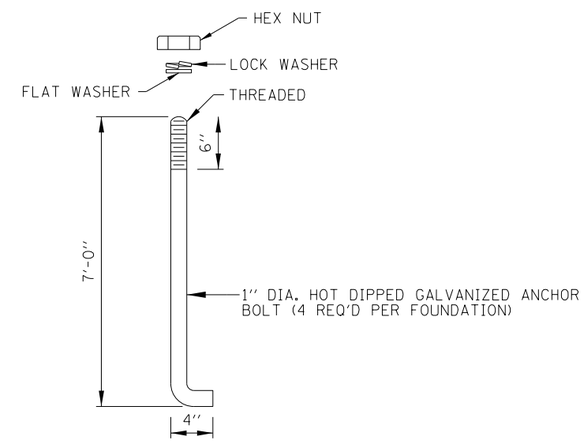

ANCHOR BOLT DETAIL

NOTES:

1. AT LOCATIONS NOT SHIELDED BY GUARDRAIL, THE LIGHT POLE FOUNDATION SHALL BE FLUSH WITH SURROUNDING GRADED ON ALL SIDES. THE SURROUNDING AREA SHALL BE A LEVEL GRADED AREA CONSTRUCTED OF AGGREGATE SHOULDERS WITH FILTER FABRIC, TYPE B, 4''.
2. PROVIDE SEEDING, POTASIUM FERTILIZER NUTRIENT, AND EROSION CONTROL BLANKET AS REQUIRED.
3. THE TOP OF FOUNDATION SHALL BE AT THE SAME ELEVATION AS THE ADJACENT TOP OF GUTTER OR WHEN ADJACENT TO AGGREGATE SHOULDER, AT THE SAME ELEVATION AS THE OUTSIDE EDGE OF THE AGGREGATE SHOULDER SLOPED A MAXIMUM 6% AWAY FROM THE PAVED SHOULDER.
4. ALL SLOPES ARE EXPRESSED AS UNITS OF VERTICAL DISPLACEMENT TO UNITS OF HORIZONTAL DISPLACEMENT (V:H).
5. ALL GROUND MOUNTED LIGHT POLES SHALL BE PROVIDED WITH AN ACCEPTED FHWA BREAKAWAY BASE OR DEVICE PER THE ILLINOIS TOLLWAY SUPPLEMENTAL SPECIFICATIONS SECTION 1070.
6. FOR DETAILS OF FUSE HOLDER, POLE BASE WIRING AND JOINT ASSEMBLY SEE STANDARD H2.
7. ALL REINFORCEMENT BARS SHALL BE EPOXY COATED.
8. ALL EQUIPMENT SHALL BE GROUNDED AND BONDED IN ACCORDANCE WITH THE NATIONAL ELECTRICAL CODE AND THE NATIONAL ELECTRICAL SAFETY CODE.

LIGHT STANDARD FOUNDATION DETAILS - CONCRETE (GROUND MOUNTED UNITS)

DATE	REVISIONS
2-07-2012	MODIFIED FOUNDATION DETAILS, REVISED NOTES
11-01-2012	ADDED CONTROLLER NUMBER
3-31-2014	REVISED HELIX FOUNDATION, NEW DETAIL "A", AND GRADED AREA
3-11-2015	MOVED MEDIAN BARRIER MOUNTED FOUNDATION DETAILS.
3-31-2016	ADDED HELIX FOUNDATION DEPTH INFORMATION.

Illinois Tollway

LIGHT STANDARD FOUNDATION

STANDARD H1-05

Paul Kovacs
APPROVED ..... CHIEF ENGINEER
DATE 2-7-2012

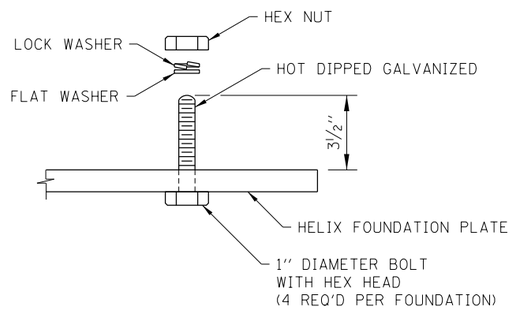

BASE ATTACHMENT DETAIL

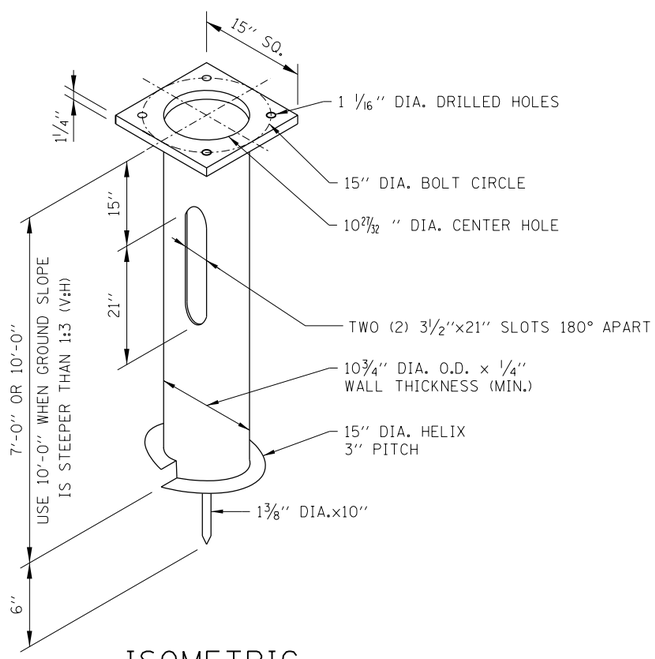

ISOMETRIC

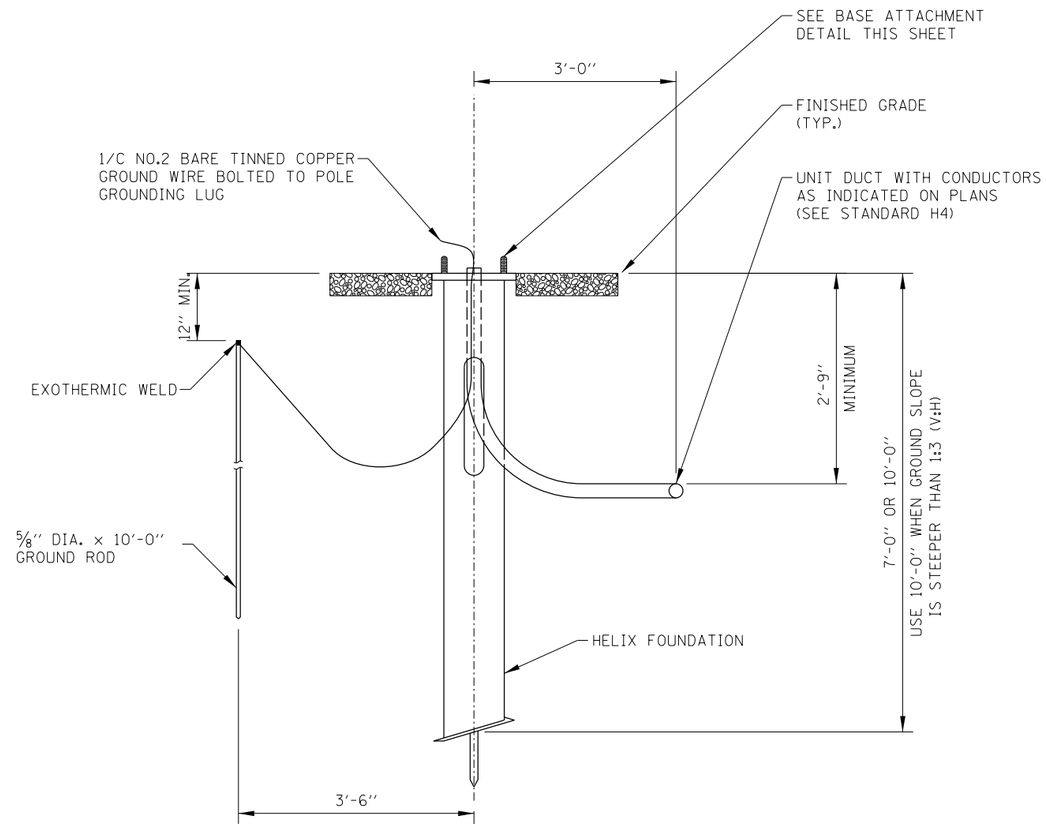

ELEVATION

SHEET 2 OF 9

Illinois Tollway

LIGHT STANDARD FOUNDATION

STANDARD H1-05

LIGHT STANDARD FOUNDATION DETAILS - HELIX
(GROUND MOUNTED UNITS)

NOTES:

SEE SHEET 1 OF THIS SERIES FOR NOTES.

Paul Kovacs
APPROVED CHIEF ENGINEER DATE 2-7-2012

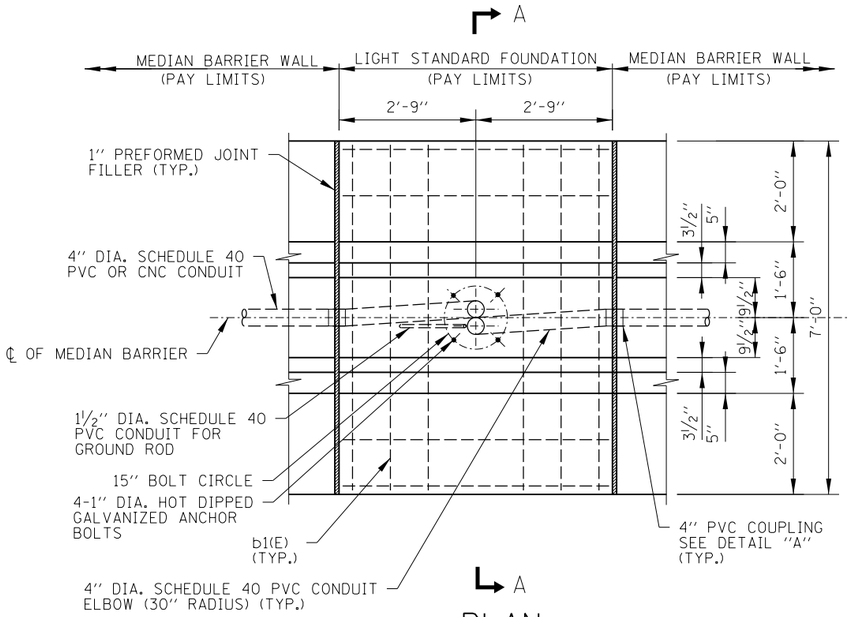

PLAN

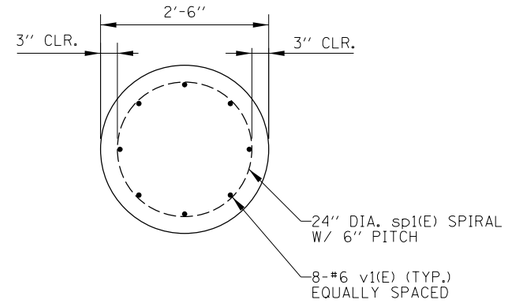

SECTION B-B

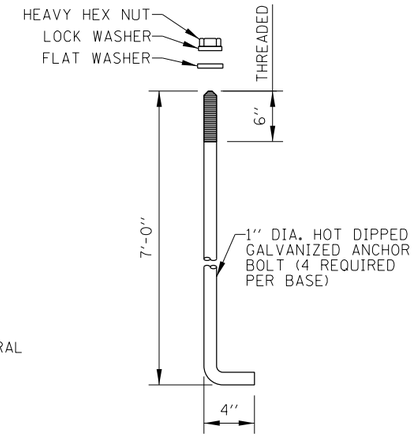

ANCHOR BOLT DETAIL

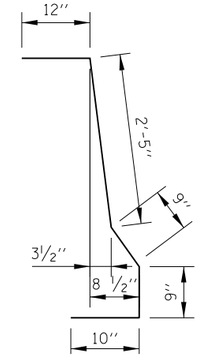

d1(E) BAR

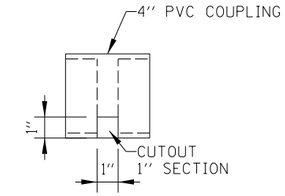

DETAIL A

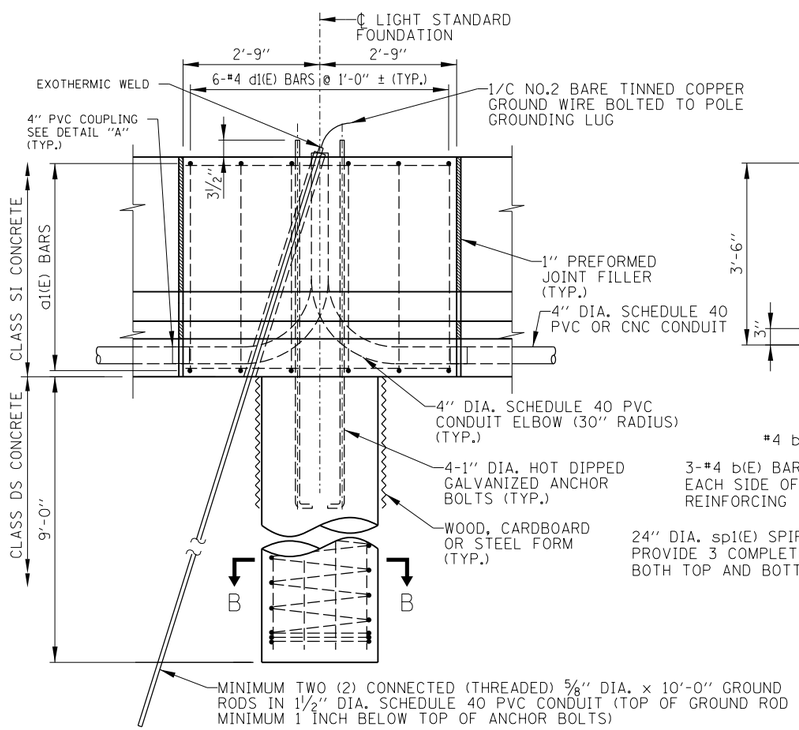

ELEVATION

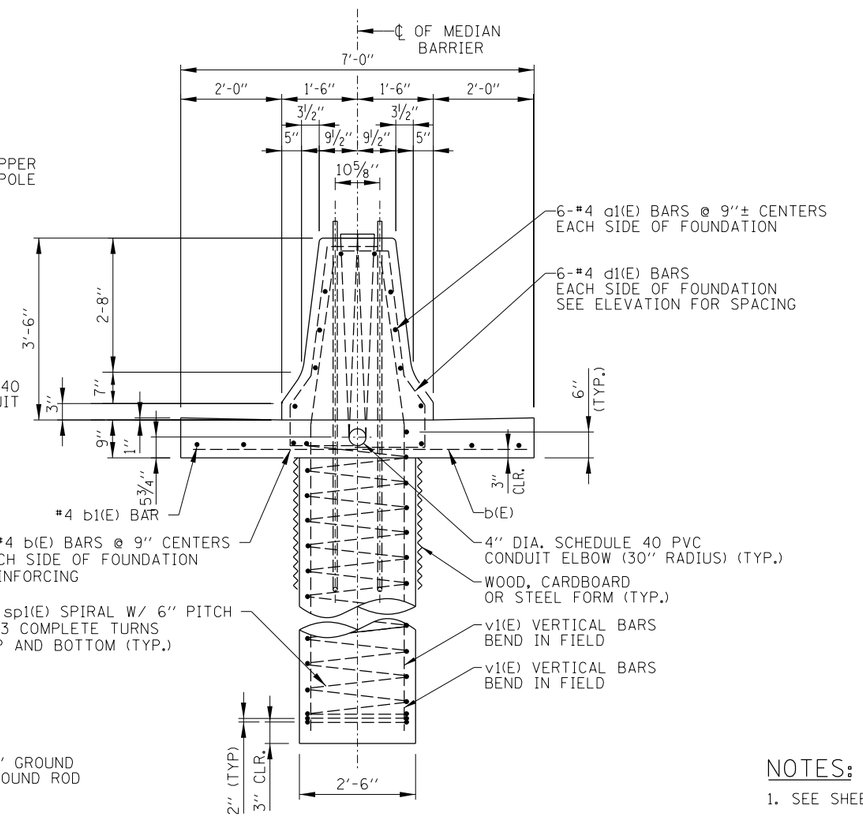

SECTION A-A

REINFORCEMENT BARS SCHEDULE					
BAR	NO.	SIZE	LENGTH	WT. LB.	SHAPE
a1(E)	12	#4	5'-0"	40	—
b(E)	6	#4	6'-6"	26	—
b1(E)	4	#4	5'-2"	14	—
d1(E)	12	#4	5'-9"	46	L
sp1(E)	1	#4	*		W
v1(E)	8	#6	11'-9"	142	—

* SEE SECTION A-A

NOTES:

1. SEE SHEET 1 OF THIS SERIES FOR NOTES.
2. FOR SLIP FORM, SEE SHEET 6 OF THIS SERIES.

Illinois Tollway

LIGHT STANDARD FOUNDATION

STANDARD H1-05

LIGHT STANDARD FOUNDATION DETAILS - MEDIAN BARRIER
(TYPE 1 CENTERED CAISSON, 42" BARRIER)

Paul Kovacs
APPROVED ..... CHIEF ENGINEER
DATE 2-7-2012

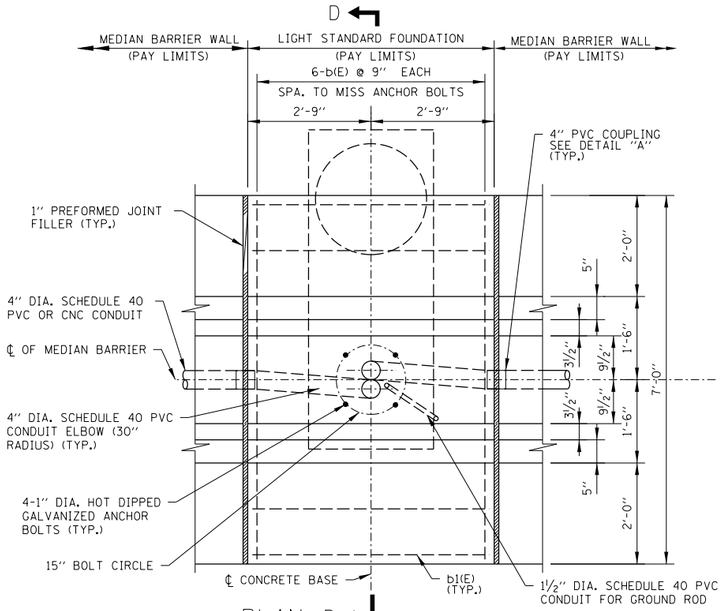

PLAN D

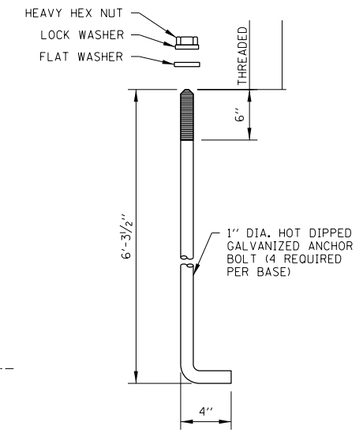

ANCHOR BOLT DETAIL

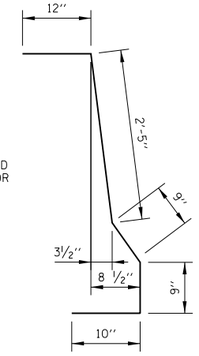

d1(E) BAR

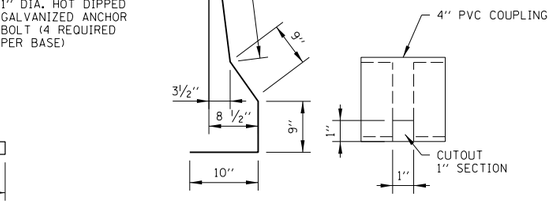

DETAIL A

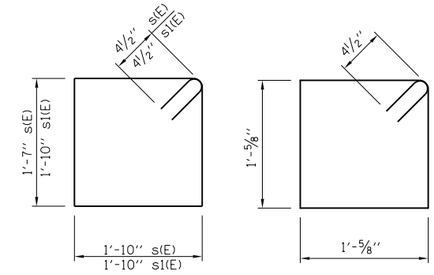

BARS s(E) AND s1(E) BAR s2(E)

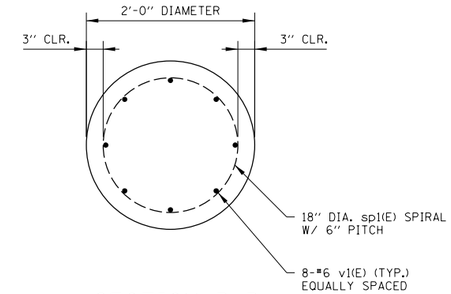

SECTION B-B

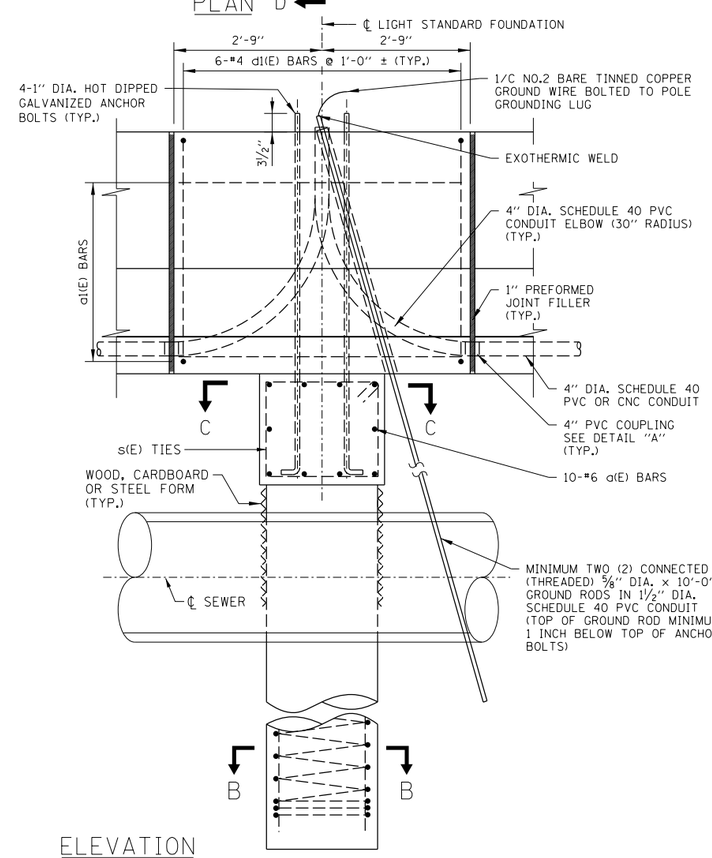

ELEVATION

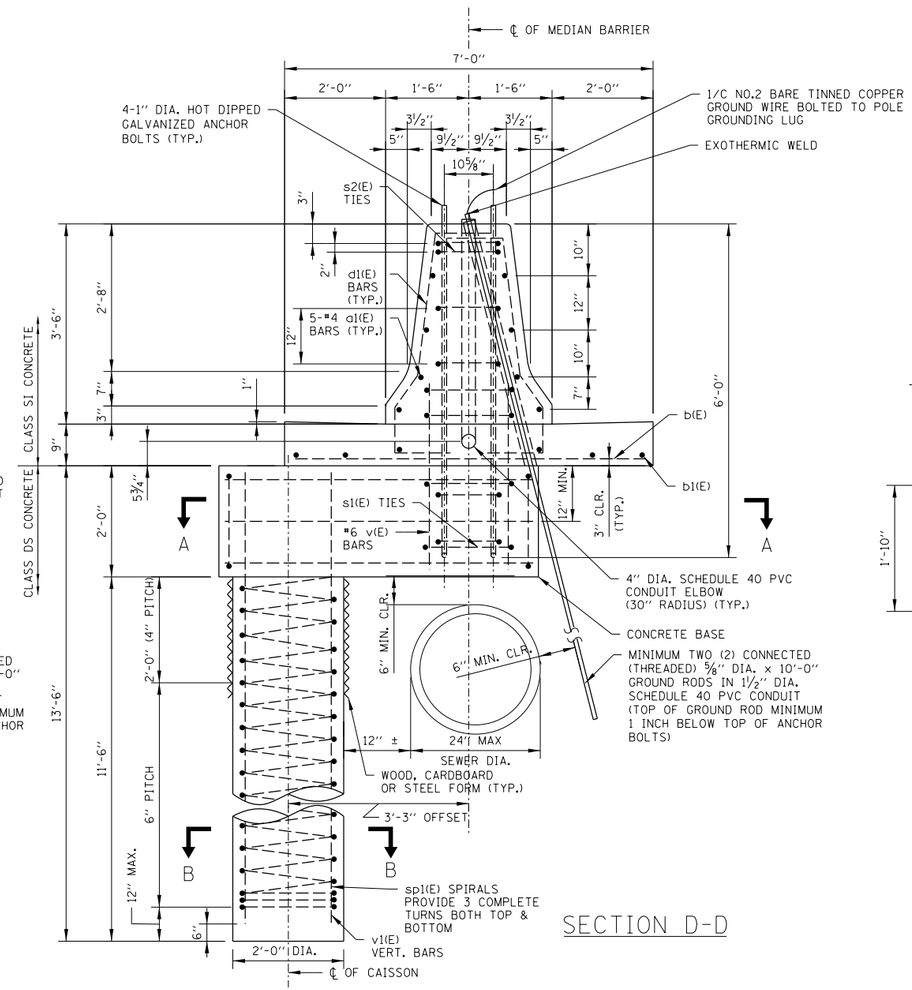

SECTION D-D

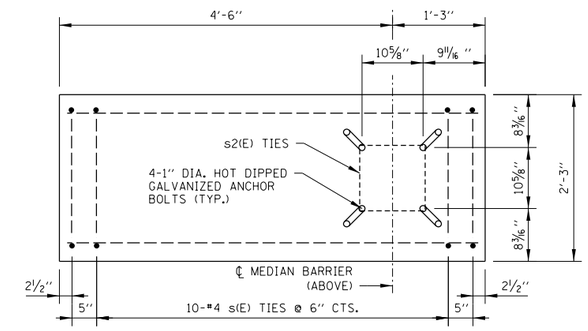

SECTION A-A

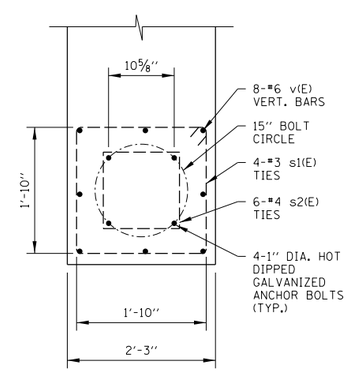

SECTION C-C

REINFORCEMENT BARS SCHEDULE					
BAR	NO.	SIZE	LENGTH	WT. LB.	SHAPE
a(E)	10	#6	5'-6"	83	
a1(E)	10	#4	5'-0"	34	
b(E)	6	#4	6'-6"	26	
b1(E)	4	#4	5'-2"	14	
d1(E)	12	#4	5'-9"	46	
s(E)	12	#4	7'-7"	61	
s1(E)	4	#4	8'-1"	22	
s2(E)	6	#4	5'-0"	20	
sp1(E)	1	#4	*		
v(E)	8	#6	3'-2"	38	
v1(E)	8	#6	12'-6"	150	

* SEE D-D

SHEET 4 OF 9

Illinois Tollway

LIGHT STANDARD FOUNDATION

STANDARD H1-05

Paul Kovacs
APPROVED CHIEF ENGINEER DATE 2-7-2012

LIGHT STANDARD FOUNDATION DETAILS - MEDIAN BARRIER
(TYPE 2 OFFSET CAISSON, 42" BARRIER)

NOTES:

1. SEE SHEET 1 OF THIS SERIES FOR NOTES.
2. FOR SLIP FORM, SEE SHEET 6 OF THIS SERIES

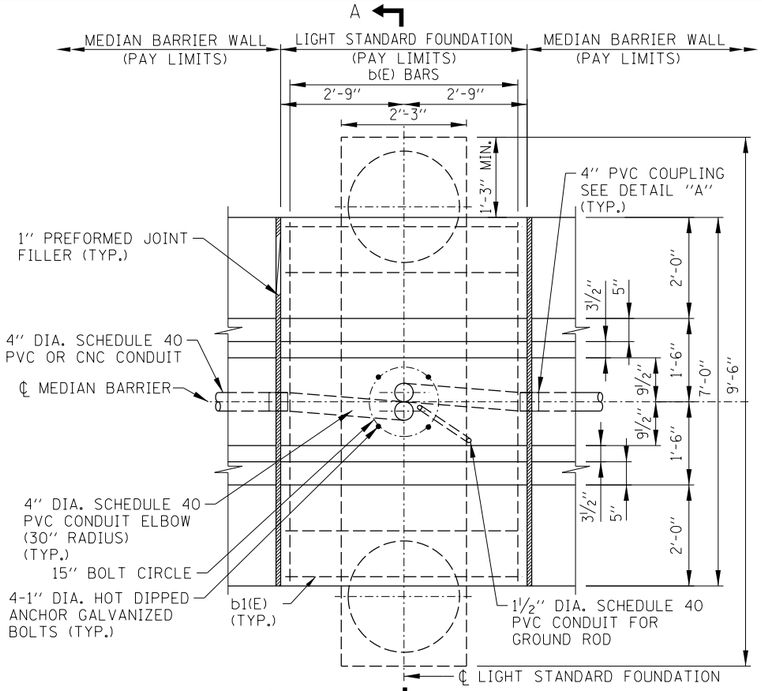

PLAN

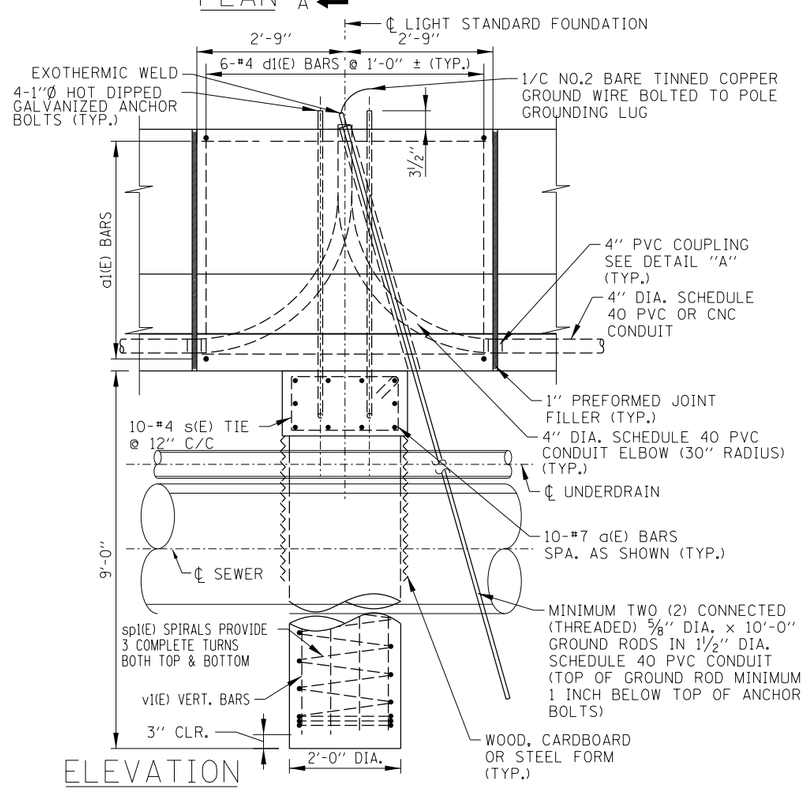

ELEVATION

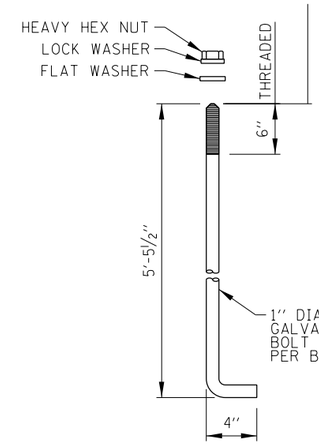

ANCHOR BOLT DETAIL

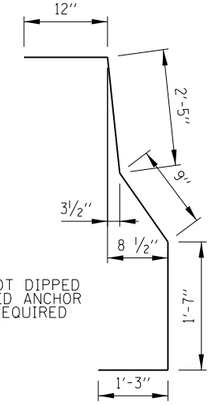

d1(E) BAR

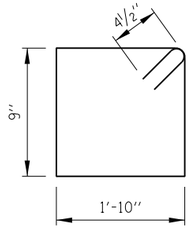

s(E) BAR

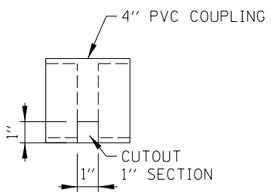

DETAIL A

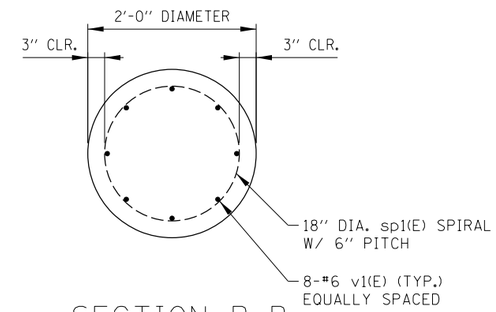

SECTION B-B

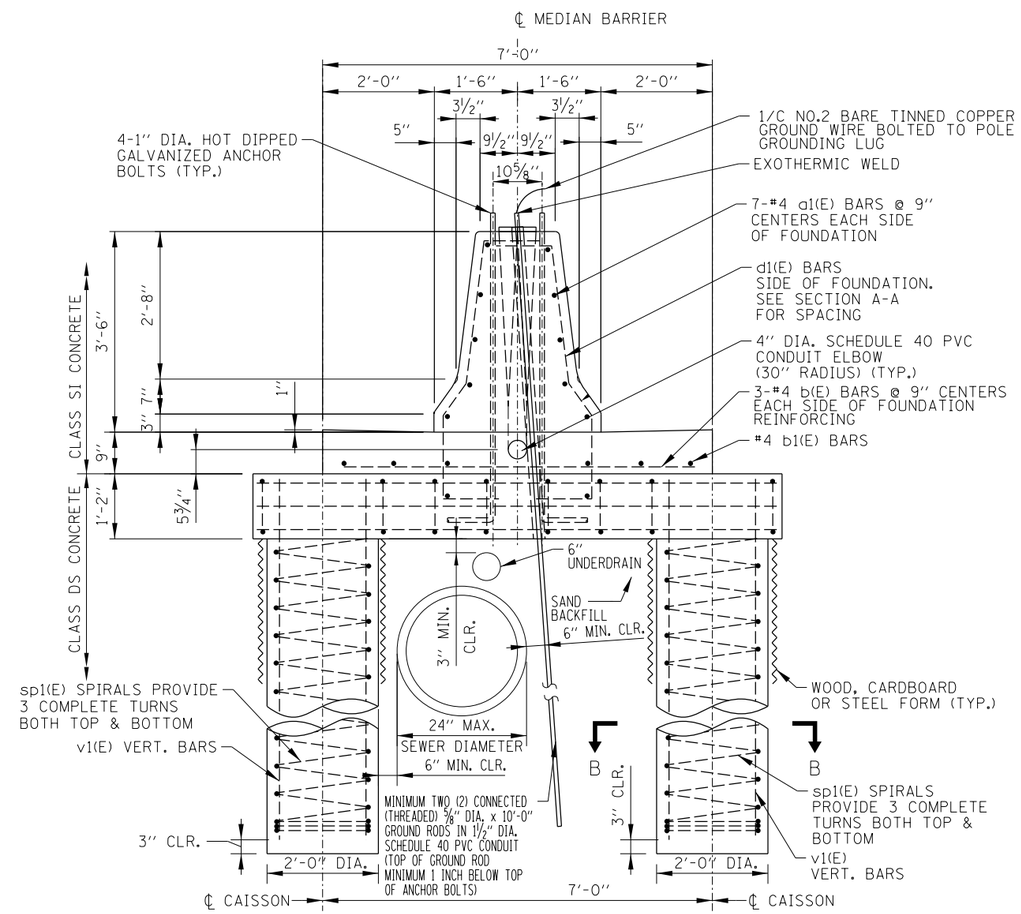

SECTION A-A

REINFORCEMENT BARS SCHEDULE					
BAR	NO.	SIZE	LENGTH	WT. LB.	SHAPE
a(E)	10	#7	9'-0"	184	—
a1(E)	14	#4	5'-0"	47	—
b(E)	6	#4	6'-6"	26	—
b1(E)	4	#4	5'-2"	14	—
d1(E)	12	#4	6'-7"	53	
s(E)	10	#4	5'-11"	40	
sp1(E)	2	#4	*		
v1(E)	16	#6	9'-9"	235	—

* SEE ELEVATION

NOTES:

1. SEE SHEET 1 OF THIS SERIES FOR NOTES.
2. FOR SLIP FORM, SEE SHEET 6 OF THIS SERIES.

SHEET 5 OF 9

Illinois Tollway

LIGHT STANDARD FOUNDATION

STANDARD H1-05

Paul Kovacs
APPROVED CHIEF ENGINEER DATE 2-7-2012

LIGHT STANDARD FOUNDATION DETAILS - MEDIAN BARRIER (TYPE 3 STRADDLED CAISSON, 42" BARRIER)

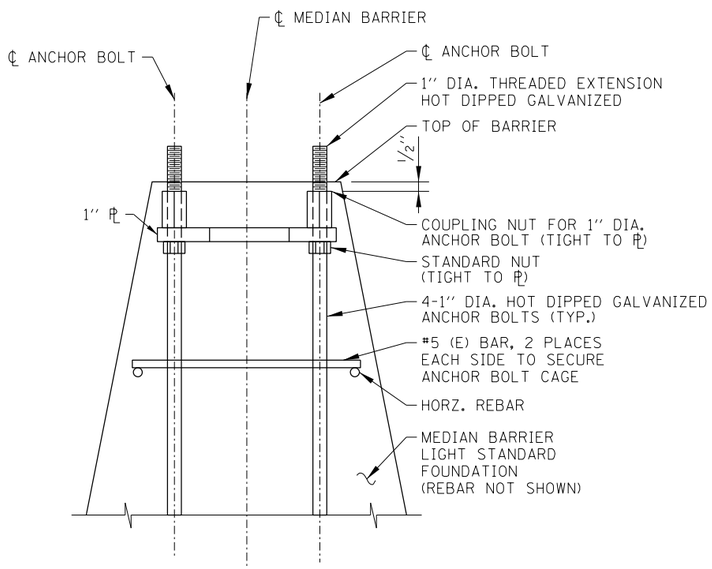

SECTION C-C

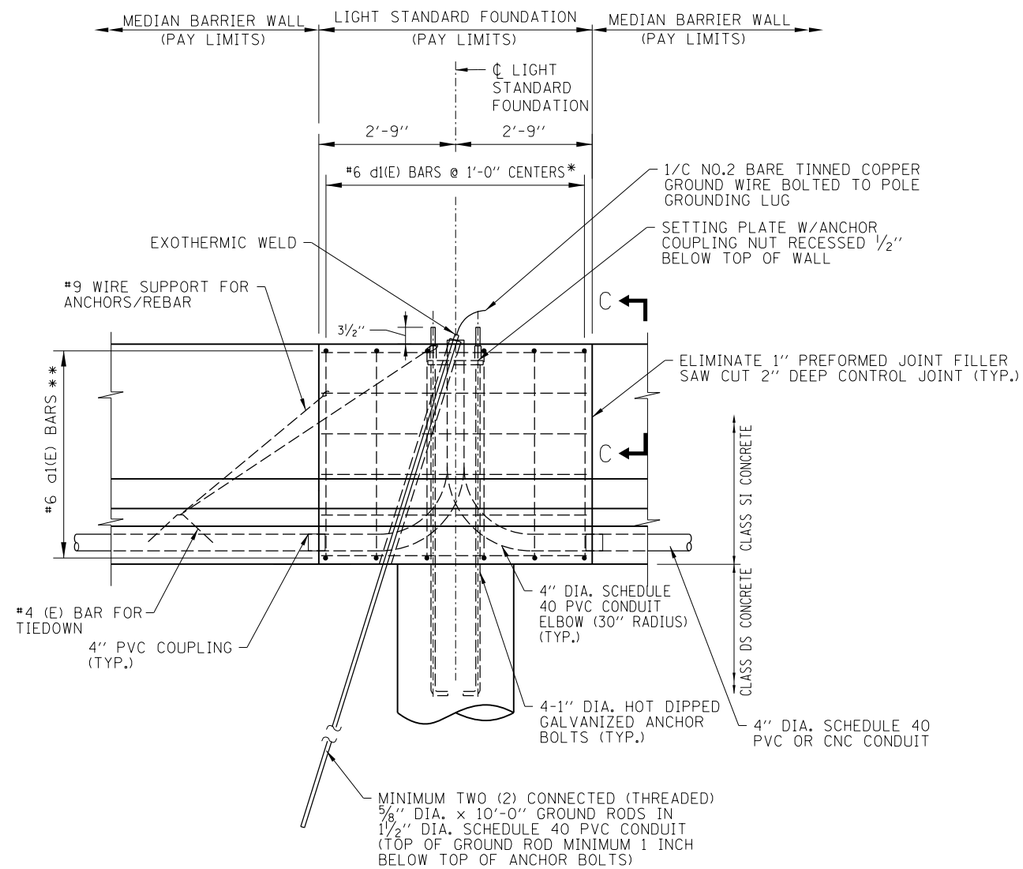

ELEVATION

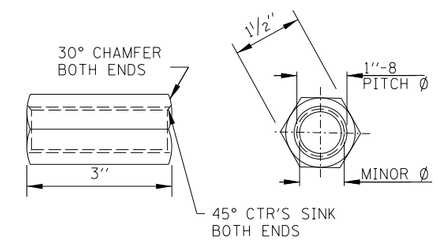

COUPLING NUT

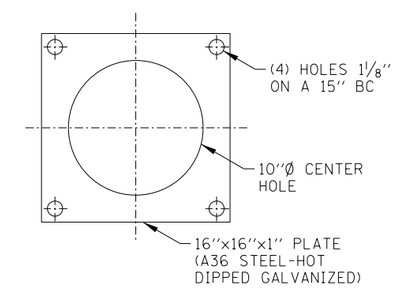

SETTING PLATE

* #6 d1(E) BAR REPLACES #4 d1(E) BAR
** #6 a1(E) BAR REPLACES #4 a1(E) BAR

SHEET 6 OF 9

LIGHT STANDARD FOUNDATION DETAILS - MEDIAN BARRIER (MODIFICATIONS FOR SLIPFORM POUR, 42'' BARRIER)

NOTES:

1. SEE SHEET 1 OF THIS SERIES FOR NOTES.
2. PLUG TOP OF COUPLER WITH PLASTIC PLUG OR COVER WHILE PLACING CONCRETE.

Illinois Tollway

LIGHT STANDARD FOUNDATION

STANDARD H1-05

Paul Kovacs
APPROVED ..... CHIEF ENGINEER
DATE 2-7-2012

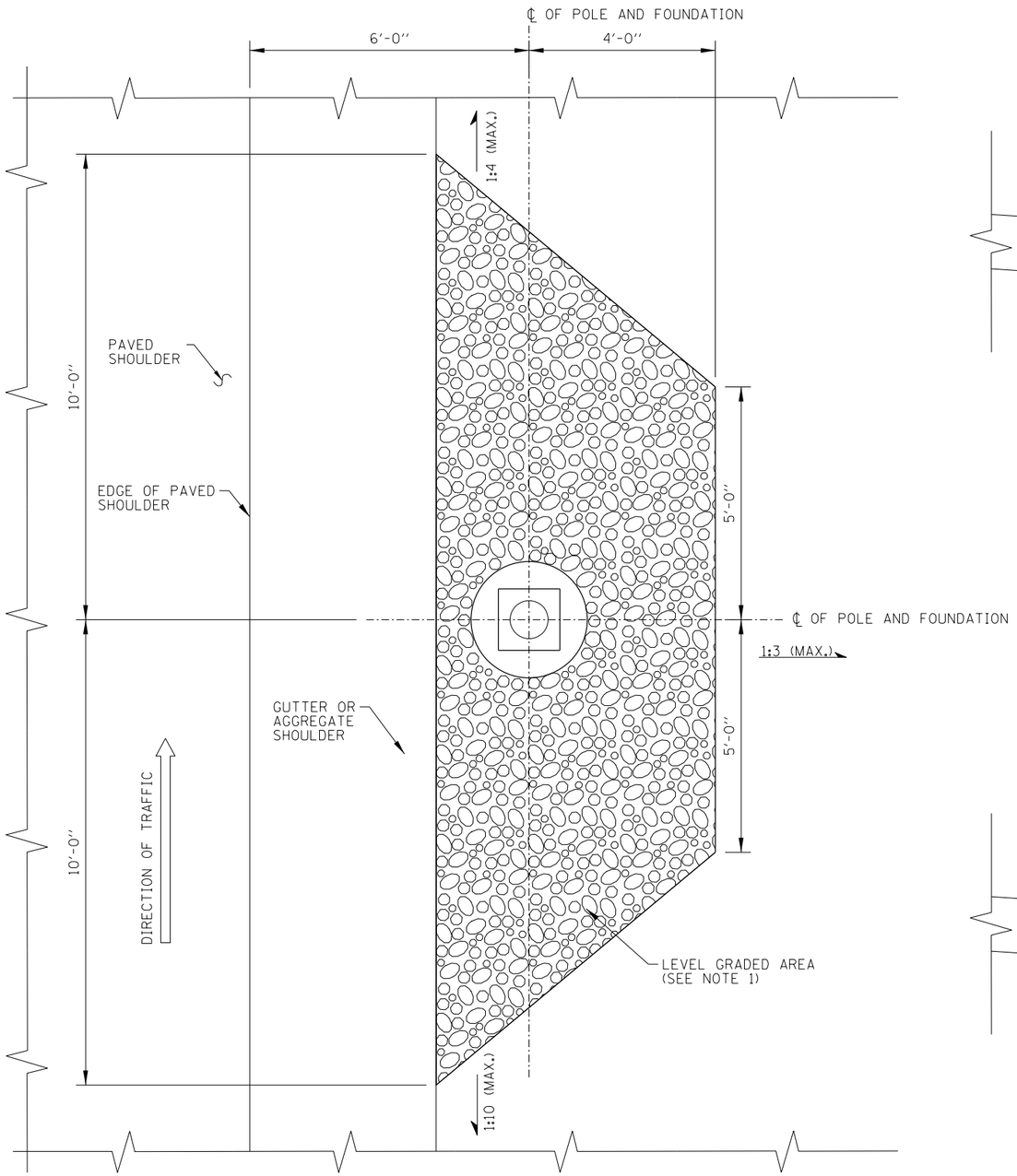

PLAN

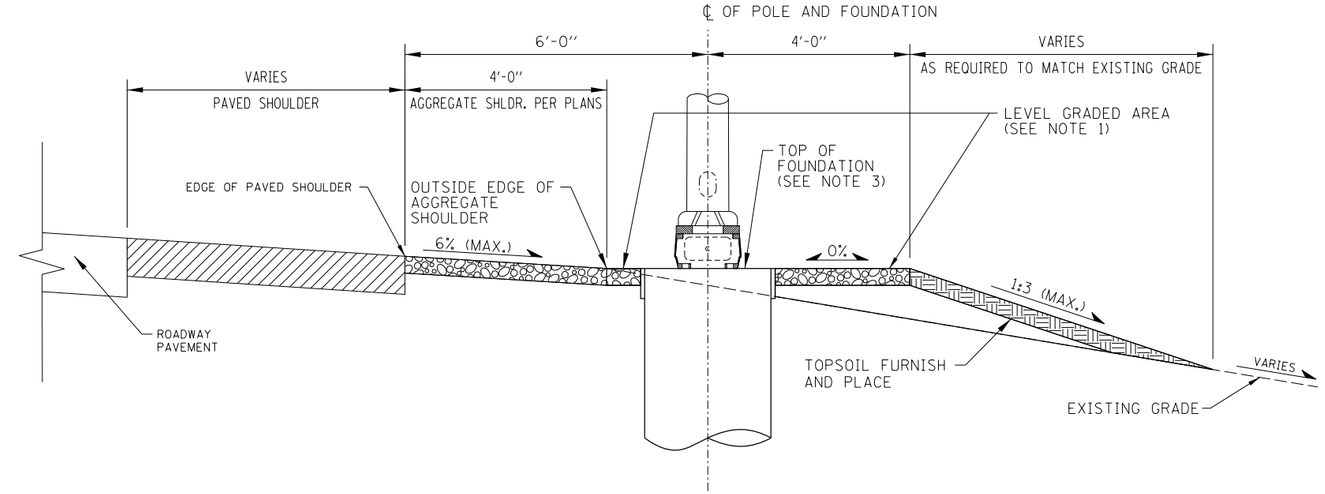

LIGHT STANDARD FOUNDATION
ADJACENT TO AGGREGATE SHOULDER

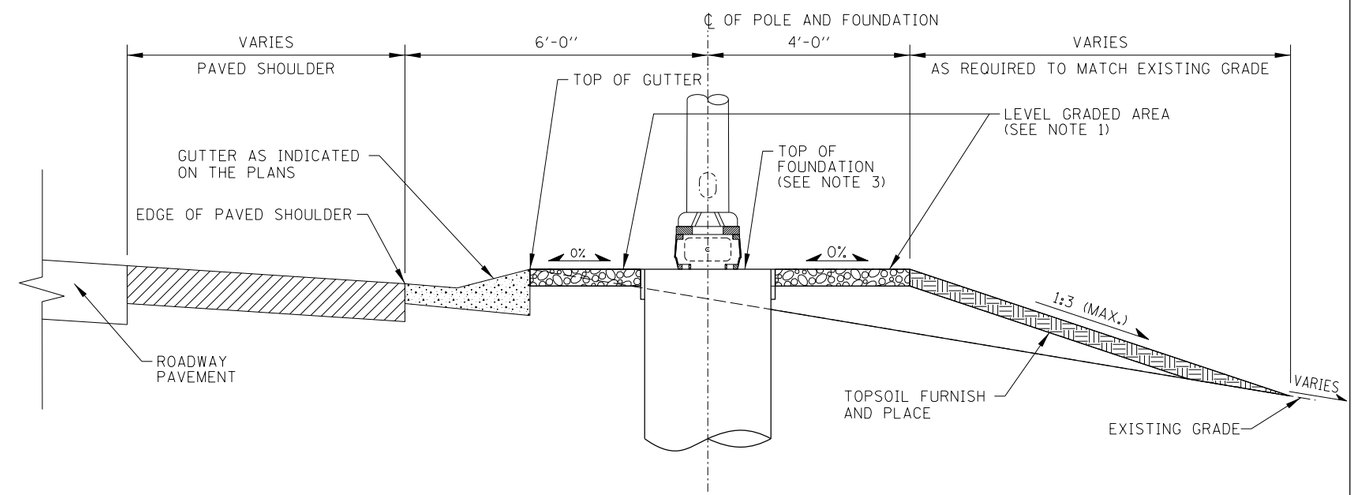

LIGHT STANDARD FOUNDATION
ADJACENT TO GUTTER

SHEET 7 OF 9

LIGHT STANDARD FOUNDATION DETAILS - GRADING W/ FORESLOPE (GROUND MOUNTED UNITS)

NOTE:
SEE SHEET 1 OF THIS SERIES FOR NOTES.

Illinois Tollway

LIGHT STANDARD FOUNDATION

STANDARD H1-05

Paul Kovacs
APPROVED ..... CHIEF ENGINEER
DATE 2-7-2012

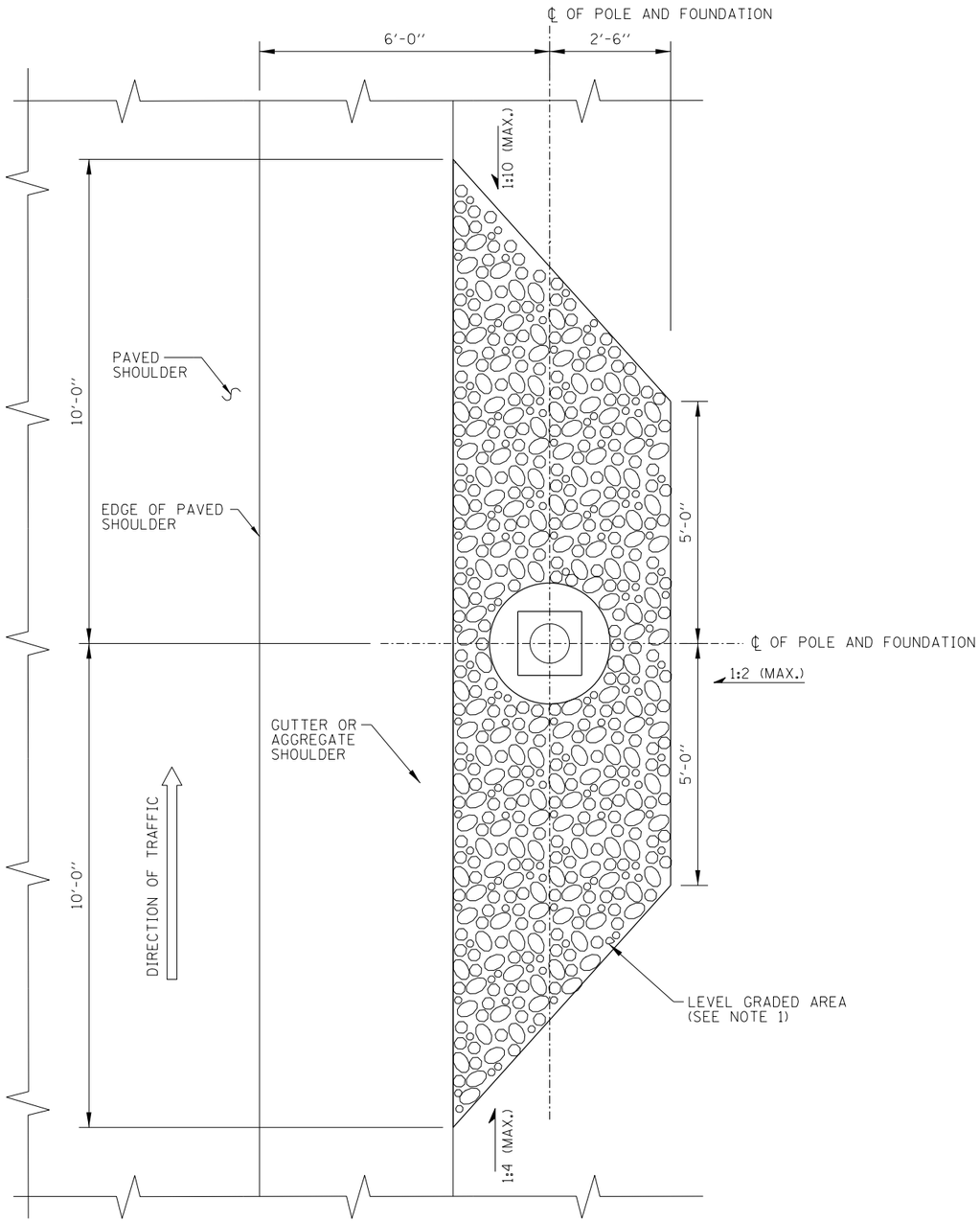

PLAN

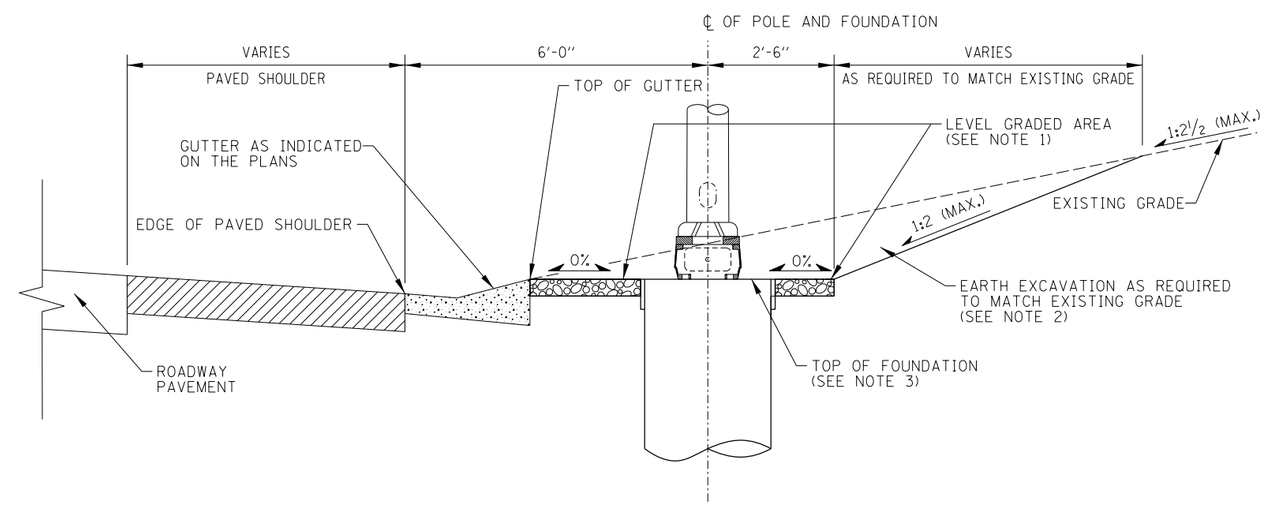

LIGHT STANDARD FOUNDATION ADJACENT TO GUTTER

SHEET 8 OF 9

LIGHT STANDARD FOUNDATION DETAILS - GRADING W/ BACKSLOPE (GROUND MOUNTED UNITS)

NOTE:
SEE SHEET 1 OF THIS SERIES FOR NOTES.

Illinois Tollway

LIGHT STANDARD FOUNDATION

STANDARD H1-05

Paul Kovacs
APPROVED ..... CHIEF ENGINEER
DATE 2-7-2012

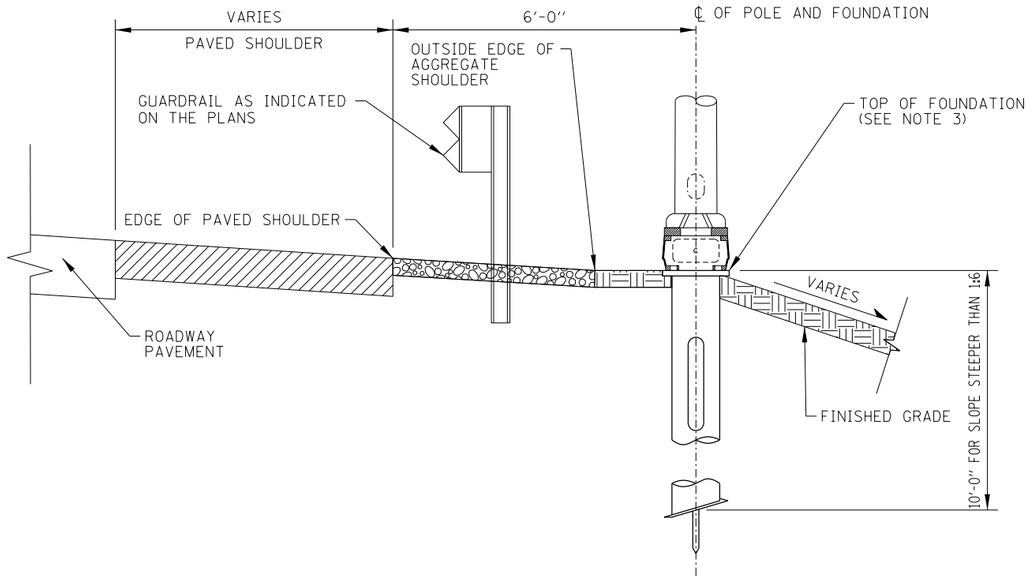

LIGHT STANDARD FOUNDATION - HELIX
ADJACENT TO AGGREGATE SHOULDER

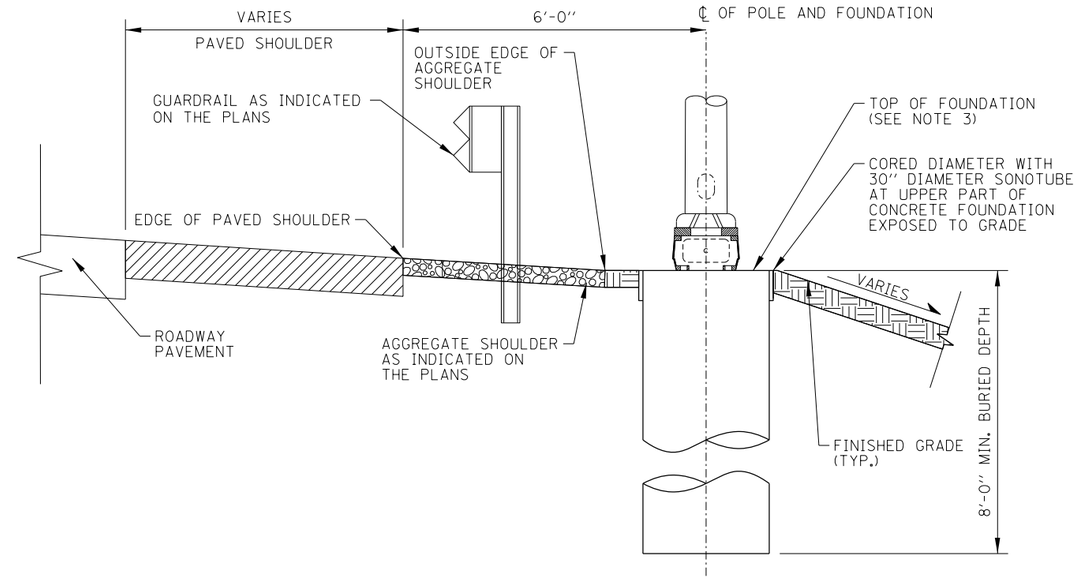

LIGHT STANDARD FOUNDATION - CONCRETE
ADJACENT TO AGGREGATE SHOULDER

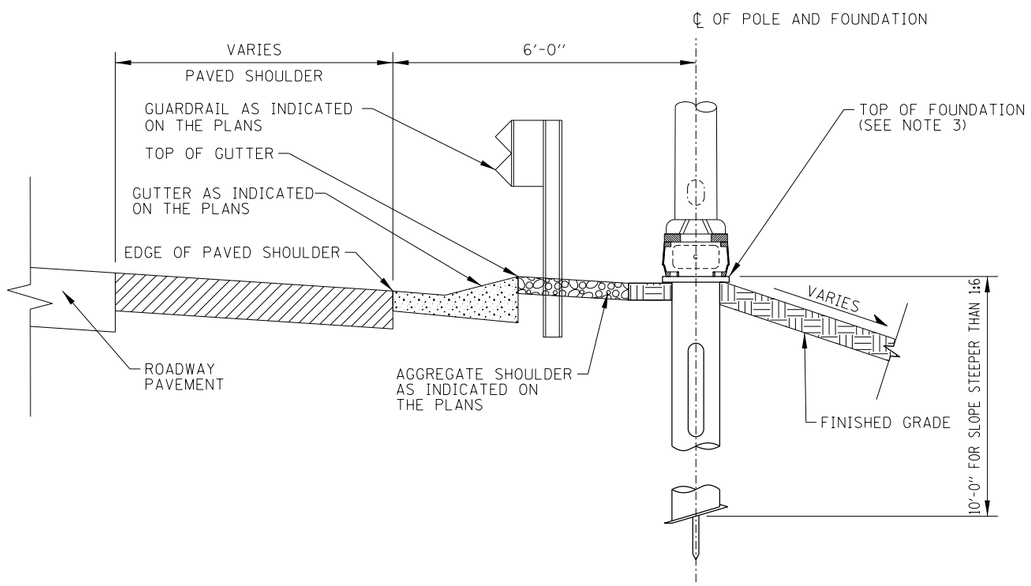

LIGHT STANDARD FOUNDATION - HELIX
ADJACENT TO GUTTER

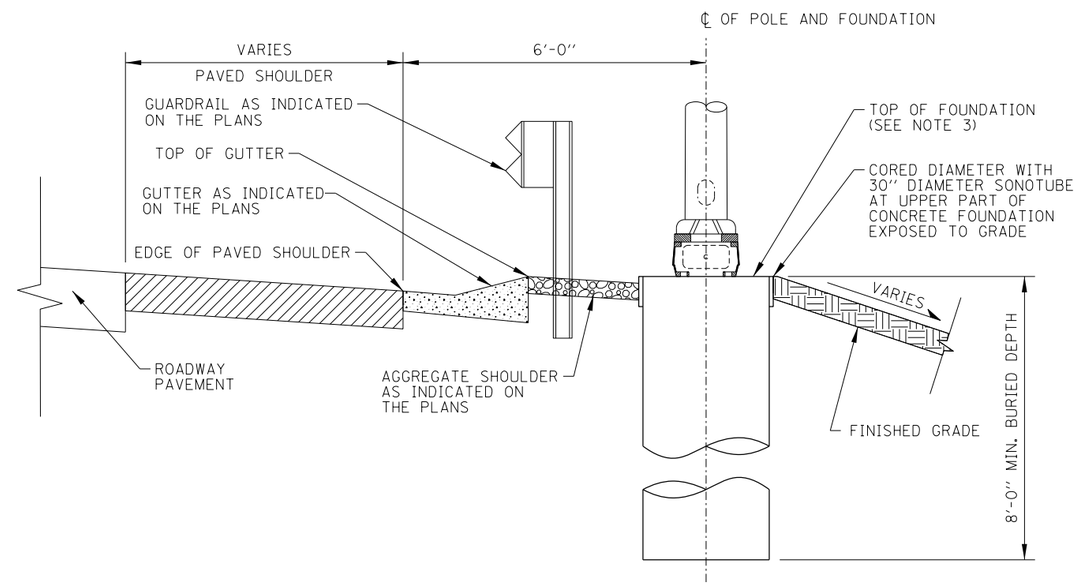

LIGHT STANDARD FOUNDATION - CONCRETE
ADJACENT TO GUTTER

SHEET 9 OF 9

LIGHT STANDARD FOUNDATION DETAILS - ADJACENT TO GUARDRAIL (GROUND MOUNTED UNITS)

Paul Kovacs
APPROVED . . . . . CHIEF ENGINEER
DATE 2-7-2012

NOTE:
SEE SHEET 1 OF THIS SERIES FOR NOTES.

Illinois Tollway

LIGHT STANDARD FOUNDATION

STANDARD H1-05

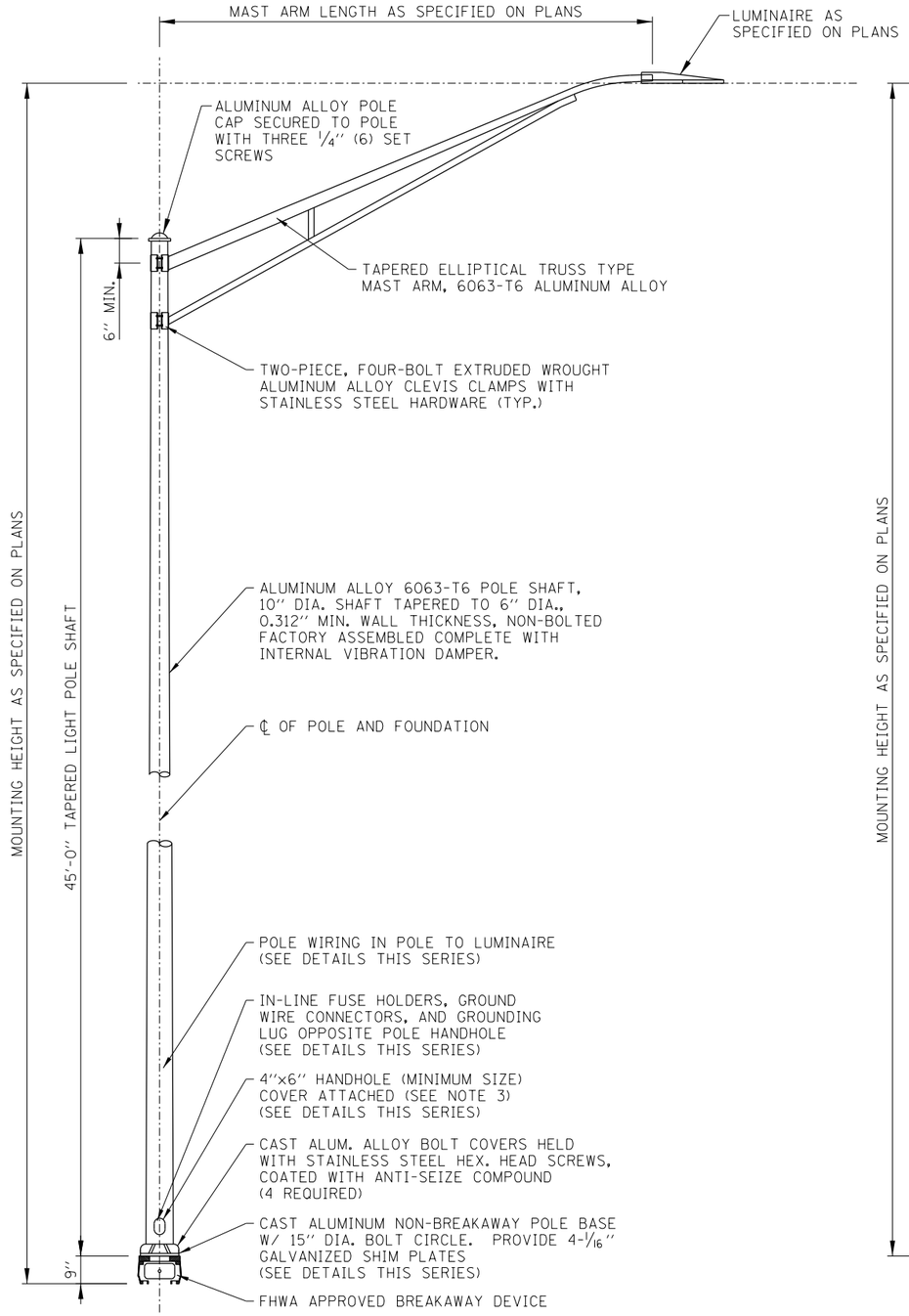

LIGHT STANDARD - SINGLE MAST ARM

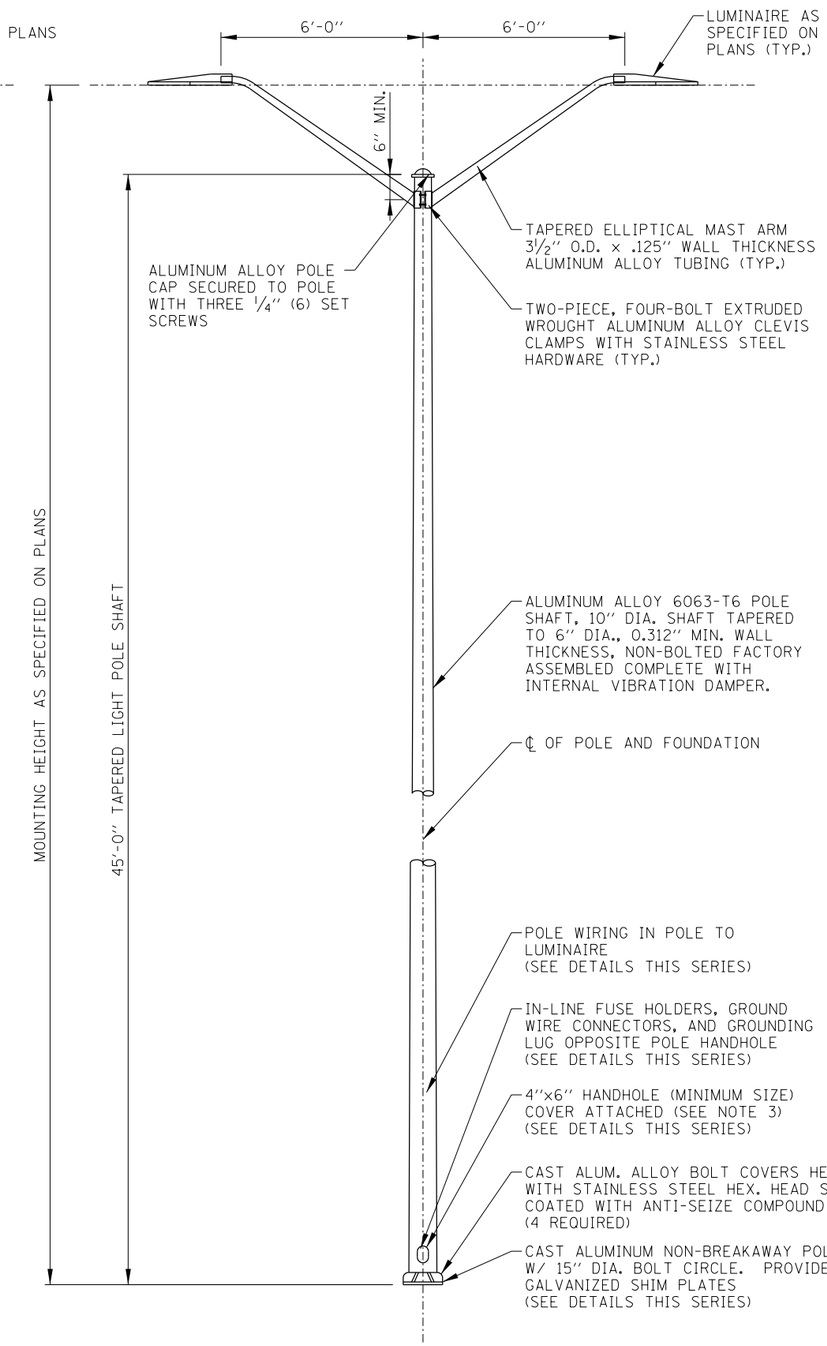

LIGHT STANDARD - TWIN MAST ARM

NOTES:

1. ALL LIGHT STANDARDS, BOTH NEW AND EXISTING, ARE SHOWN ON PLANS WITH THE SAMPLE DESCRIPTIONS SHOWN ON THIS SHEET.
2. FOR FOUNDATION DETAILS SEE STANDARD H1 OR FOR STRUCTURAL PARAPET FOUNDATION DETAILS, SEE STRUCTURAL PLANS.
3. HANDHOLE COVERS SHALL BE FASTENED USING TWO STAINLESS STEEL SCREWS WITH CAPTIVE STAINLESS STEEL NUTS OR INSERTS, PER ILLINOIS TOLLWAY SUPPLEMENTAL SPECIFICATION SECTION 1069.
4. PROVIDE A 24" LONG POLYETHYLENE TUBE TO PROTECT CABLES WHERE THEY PASS THROUGH THE GROMMETED OPENING AT THE POLE/MAST ARM JUNCTION.
5. ALL GROUND MOUNTED LIGHT POLES SHALL BE PROVIDED WITH AN ACCEPTED FHWA BREAKAWAY BASE OR DEVICE PER THE ILLINOIS TOLLWAY SUPPLEMENTAL SPECIFICATIONS SECTION 1070.
6. EACH BRIDGE MOUNTED LIGHT STANDARD SHALL BE PROVIDED WITH SHOCK ABSORBING VIBRATION PADS, NUTS, WASHERS, LEVELING PLATE AND WIRE MESH FOR ITS ERECTION ON THE FOUNDATION AS SHOWN ON THE PLANS.
7. LIGHT STANDARD WIRING DETAIL FOR INSTALLATION WITH CONCRETE FOUNDATION SHOWN. DETAIL FOR INSTALLATION WITH HELIX FOUNDATION IS SIMILAR.
8. LIGHT STANDARD WIRING DETAILS SHOWN FOR TWIN MAST ARM (2 LUMINAIRES PER POLE) INSTALLATIONS. SINGLE MAST ARM (1 LUMINAIRE PER POLE) INSTALLATIONS SHALL OMIT TWO (2) IN-LINE FUSE HOLDERS, ONE SURGE PROTECTION DEVICE AND ASSOCIATED WIRING.
9. CONDUCTORS EXTENDED INTO LIGHT POLE BASE SHALL BE OF SUFFICIENT LENGTH TO WITHDRAW SPLICES AND/OR INSULATED JOINTS A MINIMUM 18" OUT OF THE POLE HANDHOLE.
10. ALL CONDUCTORS ORIGINATING IN POLE SHALL BE A 1/C NO. 10 AWG UNLESS OTHERWISE NOTED.
11. ALL EQUIPMENT SHALL BE GROUNDED AND BONDED IN ACCORDANCE WITH THE NATIONAL ELECTRICAL CODE AND THE NATIONAL ELECTRICAL SAFETY CODE.

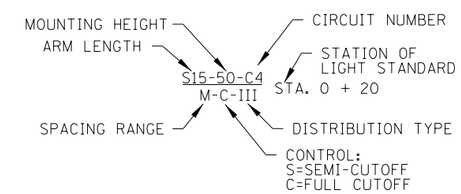

LIGHT STANDARD DESCRIPTION - HPS LUMINAIRES

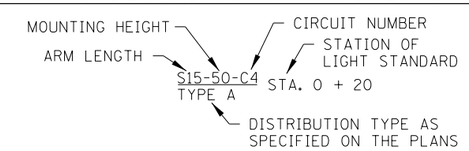

LIGHT STANDARD DESCRIPTION - LED LUMINAIRES

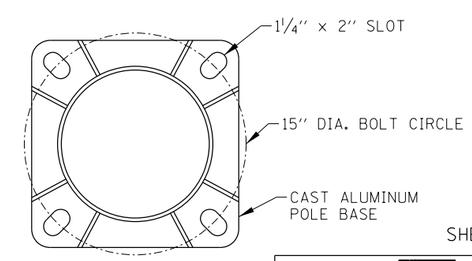

POLE BASE

SHEET 1 OF 3

Illinois Tollway

LIGHT STANDARD DETAILS

DATE	REVISIONS
02-07-12	REVISED LIGHT POLE HANDHOLE NOTES. REMOVED
	CABLE VOLTAGE, AND REVISED NOTES.
03-31-14	REVISED WIRING DIAGRAM.
3-11-2015	REVISED LIGHT STANDARD POLE WIRING DETAILS.
3-31-2016	REVISED BARRIER WALL UNIT MOUNTING DETAILS.

LIGHT STANDARD DETAILS

STANDARD H2-04

Paul Kovacs
APPROVED ..... CHIEF ENGINEER
DATE 2-7-2012

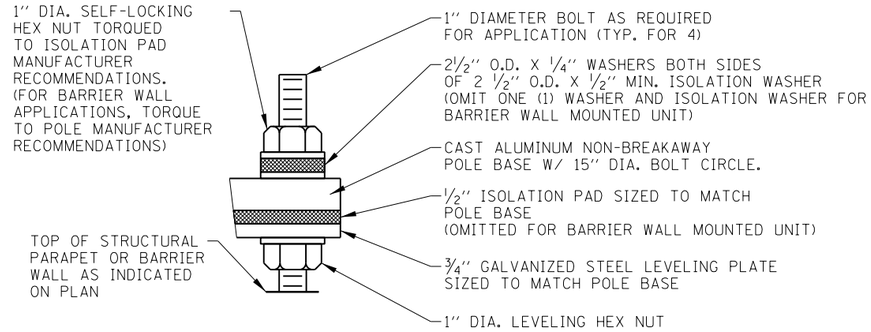

DETAIL A

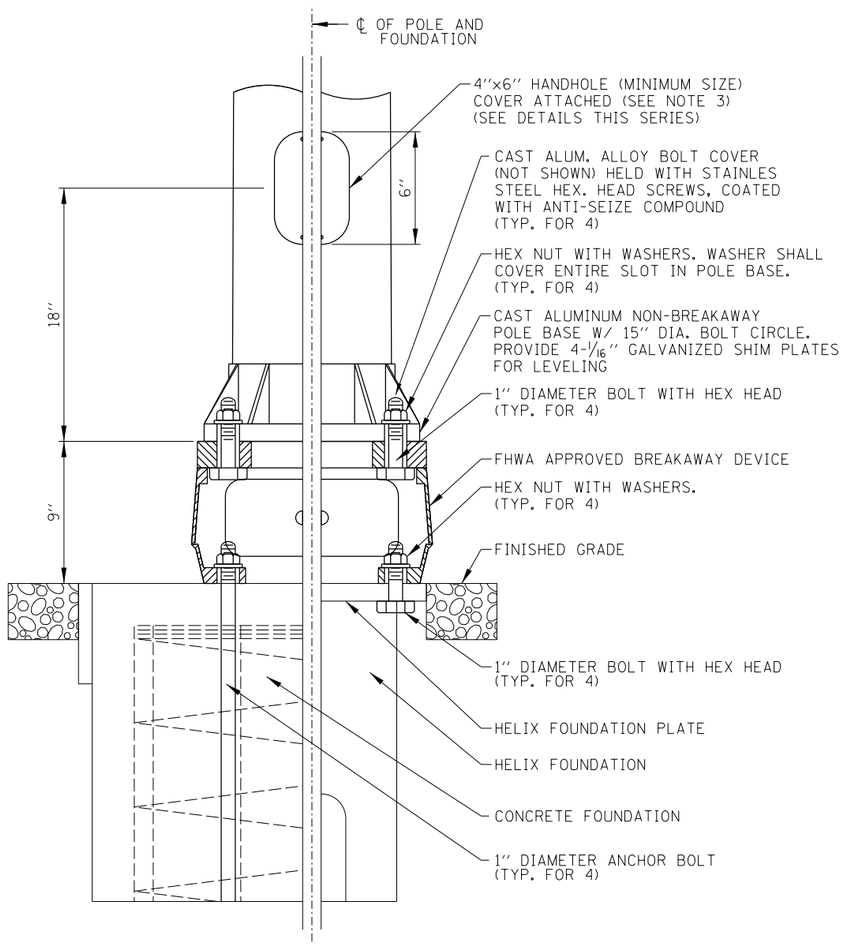

LIGHT STANDARD MOUNTING DETAIL
(GROUND MOUNTED UNITS)

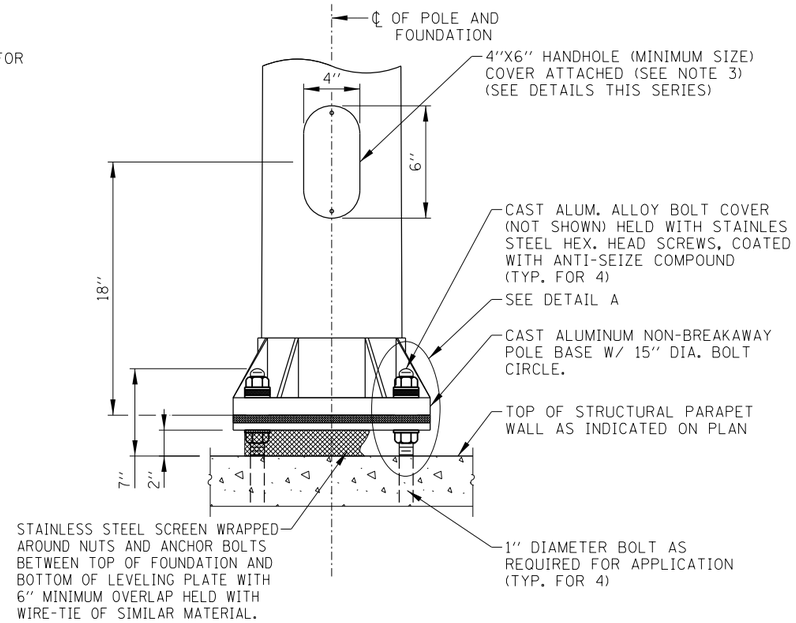

LIGHT STANDARD MOUNTING DETAIL
(STRUCTURAL PARAPET WALL MOUNTED UNITS)

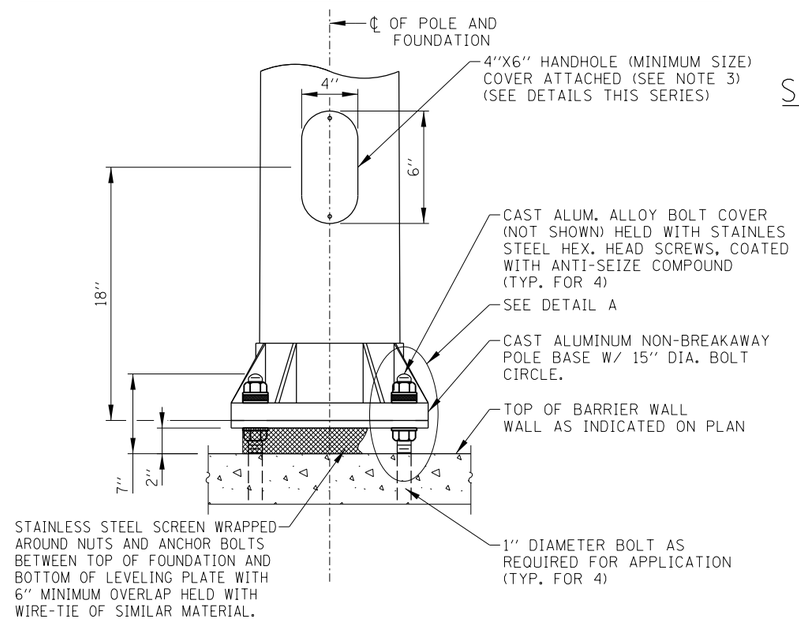

LIGHT STANDARD MOUNTING DETAIL
(BARRIER WALL MOUNTED UNITS)

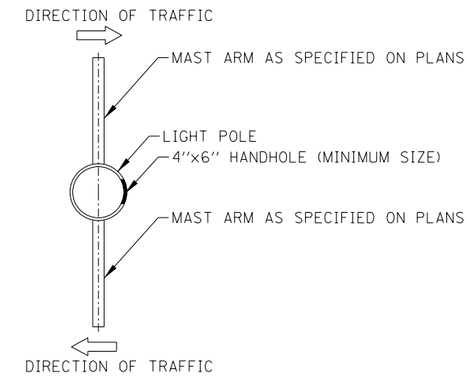

MEDIAN BARRIER WALL MOUNTED UNITS

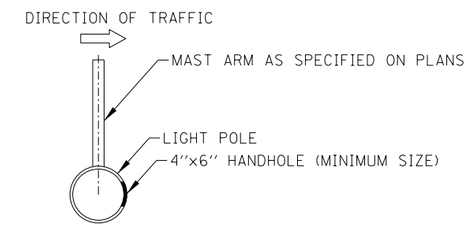

STRUCTURAL PARAPET WALL MOUNTED UNITS

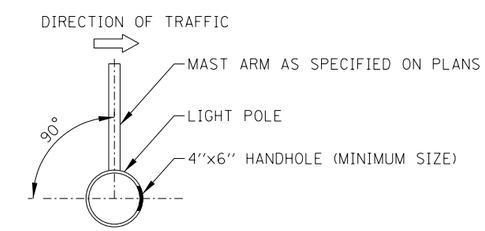

GROUND MOUNTED UNITS

LIGHT STANDARD HANDHOLE ORIENTATION DETAIL

SHEET 2 OF 3

Illinois Tollway

LIGHT STANDARD DETAILS

STANDARD H2-04

Paul Kovacs
APPROVED ..... CHIEF ENGINEER DATE 2-7-2012

LIGHT STANDARD MOUNTING DETAILS

NOTE:
SEE SHEET 1 OF THIS SERIES FOR NOTES.

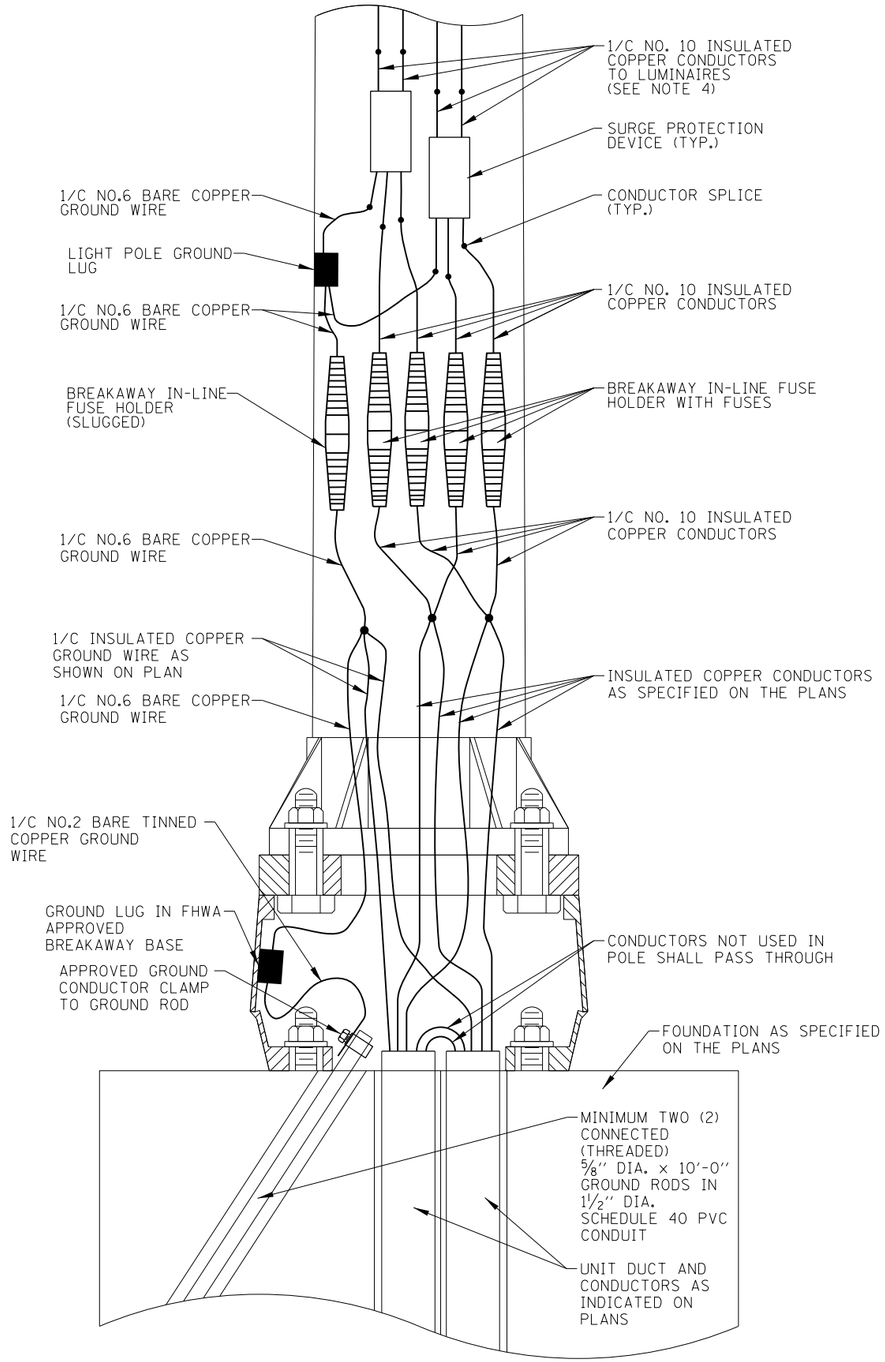

LIGHT STANDARD WIRING DETAIL (GROUND MOUNTED UNITS)

(SEE NOTES 7 & 8)

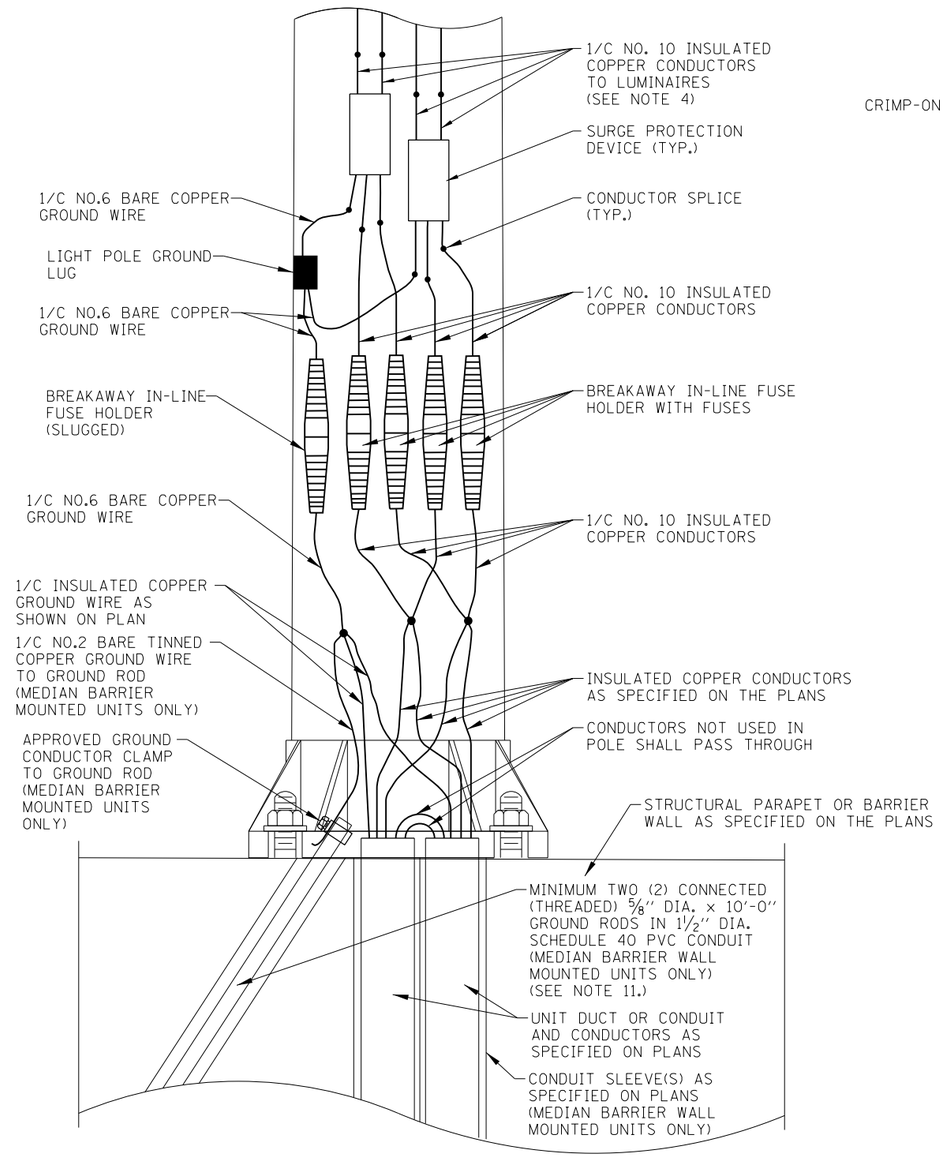

LIGHT STANDARD WIRING DETAIL (STRUCTURAL AND BARRIER WALL MOUNTED UNITS)

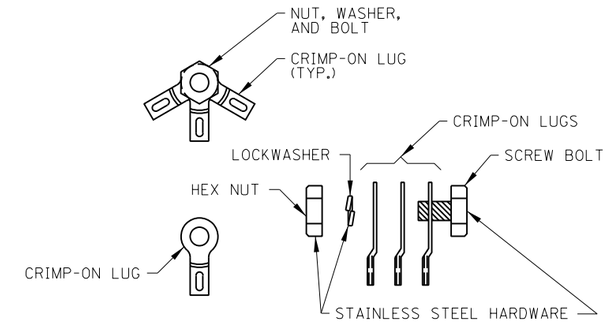

CONDUCTOR SPLICE DETAIL

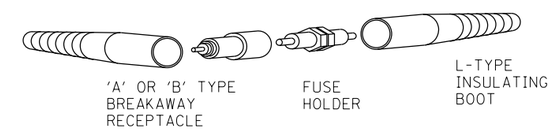

IN-LINE FUSE HOLDER WITH BREAKAWAY FEATURE DETAIL

Paul Kovacs
APPROVED ..... CHIEF ENGINEER
DATE 2-7-2012

LIGHT STANDARD WIRING DETAILS

NOTE:
SEE SHEET 1 OF THIS SERIES FOR NOTES.

SHEET 3 OF 3

Illinois Tollway

LIGHT STANDARD DETAILS

STANDARD H2-04

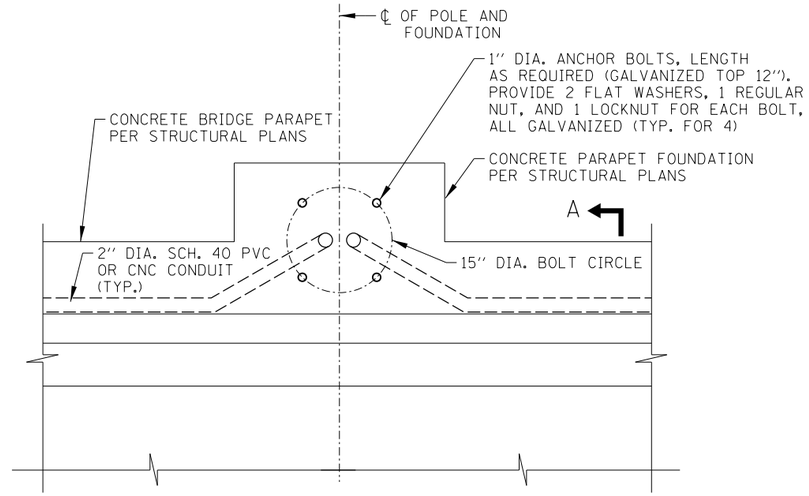

PLAN

NOTES:

1. FOR STRUCTURAL PARAPET FOUNDATION DETAILS, SEE STRUCTURAL PLANS.
2. THE END 4'-0'' SECTION OF WINGWALL/PARAPET SHALL BE KEPT FREE FROM ANY ATTACHMENTS TO AVOID CONFLICT FROM TRAFFIC BARRIER TERMINAL TYPE T6 ANCHORAGE ASSEMBLY.
3. ALL CONDUIT, JUNCTION BOXES AND APPURTENANCES MOUNTED TO STRUCTURE SHALL BE OFFSET FROM THE FACE OF THE STRUCTURE A MINIMUM OF ONE (1) INCH BY MEANS OF A STAINLESS STEEL C-CHANNEL. C-CHANNEL SHALL BE SECURED TO BRIDGE PARAPET WITH ½'' DIA. EXPANSION ANCHORS (MIN. 2'' LONG). EXPANSION ANCHORS SHALL BE HOT DIPPED GALVANIZED AFTER FABRICATION AND SHALL BE MADE BY PARABOLT, KWICK-BOLT OR WEJ-IT. CONDUIT SHALL BE SECURED WITH APPROVED CLAMPS A MINIMUM OF 5 FEET FROM CENTER AND A MINIMUM OF 2 FEET FROM ANY CHANGE IN DIRECTION OR JUNCTION BOX.
4. THE BARREL IN THE EXPANSION JOINT FITTING SHALL BE FULLY EMBEDDED IN THE CONCRETE ON ONE SIDE OF THE EXPANSION JOINT. ONE HALF THE LENGTH OF THE DEFLECTION FITTING SHALL BE EMBEDDED IN THE CONCRETE ON THE OTHER SIDE OF THE EXPANSION JOINT.
5. EXPANSION/DELFECTION JOINTS SHALL BE PROVIDED AT ALL BRIDGE EXPANSION JOINTS.
6. ALL CLAMPS AND HARDWARE FOR CONDUIT MOUNTING SHALL BE OF LIKE MATERIAL AS THE CONDUIT.
7. ALL EQUIPMENT SHALL BE GROUNDED AND BONDED IN ACCORDANCE WITH THE NATIONAL ELECTRICAL CODE AND THE NATIONAL ELECTRICAL SAFETY CODE.

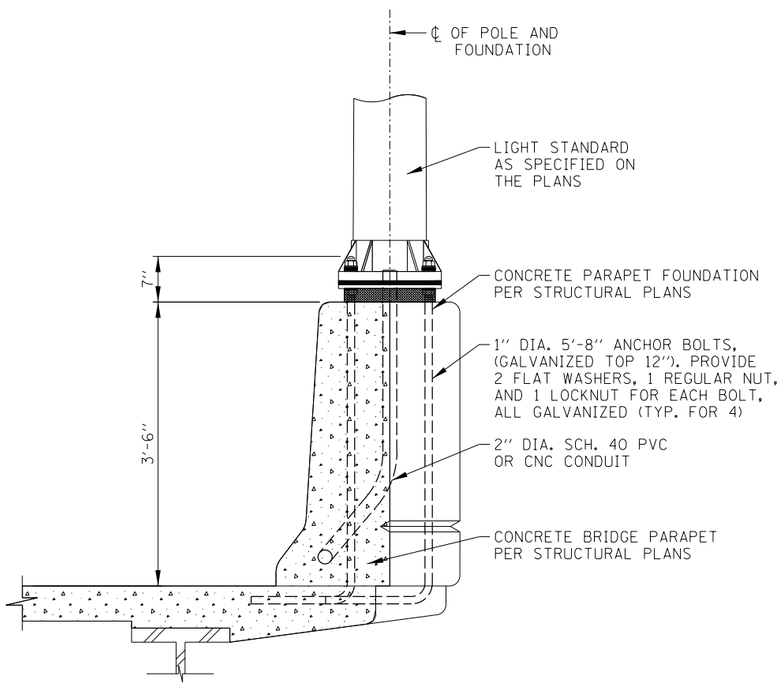

SECTION A-A

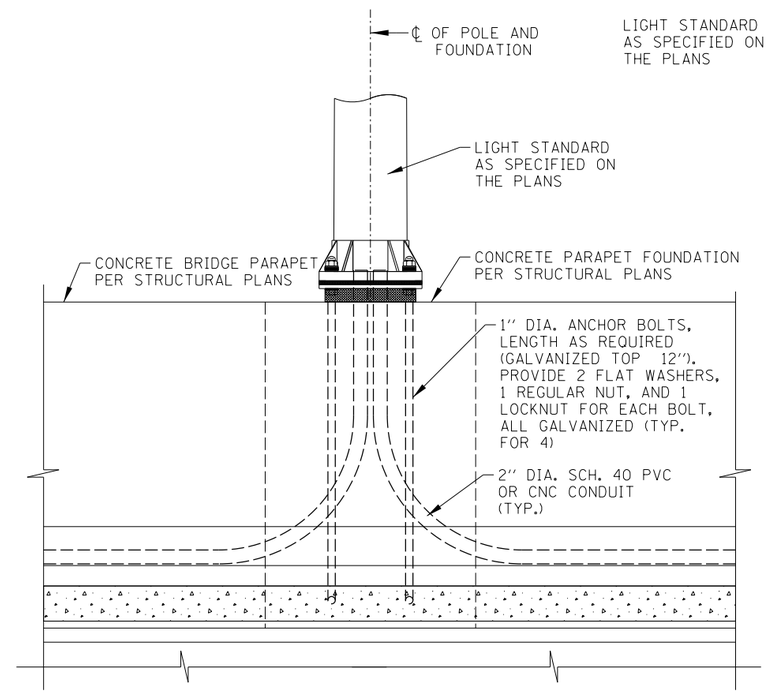

ELEVATION

SHEET 1 OF 4

Illinois Tollway

DATE	REVISIONS
2-07-2012	REVISED NOTES
11-01-2012	REVISED JUNCTION BOX
3-11-2015	ADDED BRIDGE CONDUIT DETAILS

CONDUIT EMBEDDED IN BRIDGE PARAPET

BRIDGE CONDUIT DETAILS

STANDARD H3-03

Paul Kovacs
APPROVED ..... CHIEF ENGINEER
DATE 2-7-2012

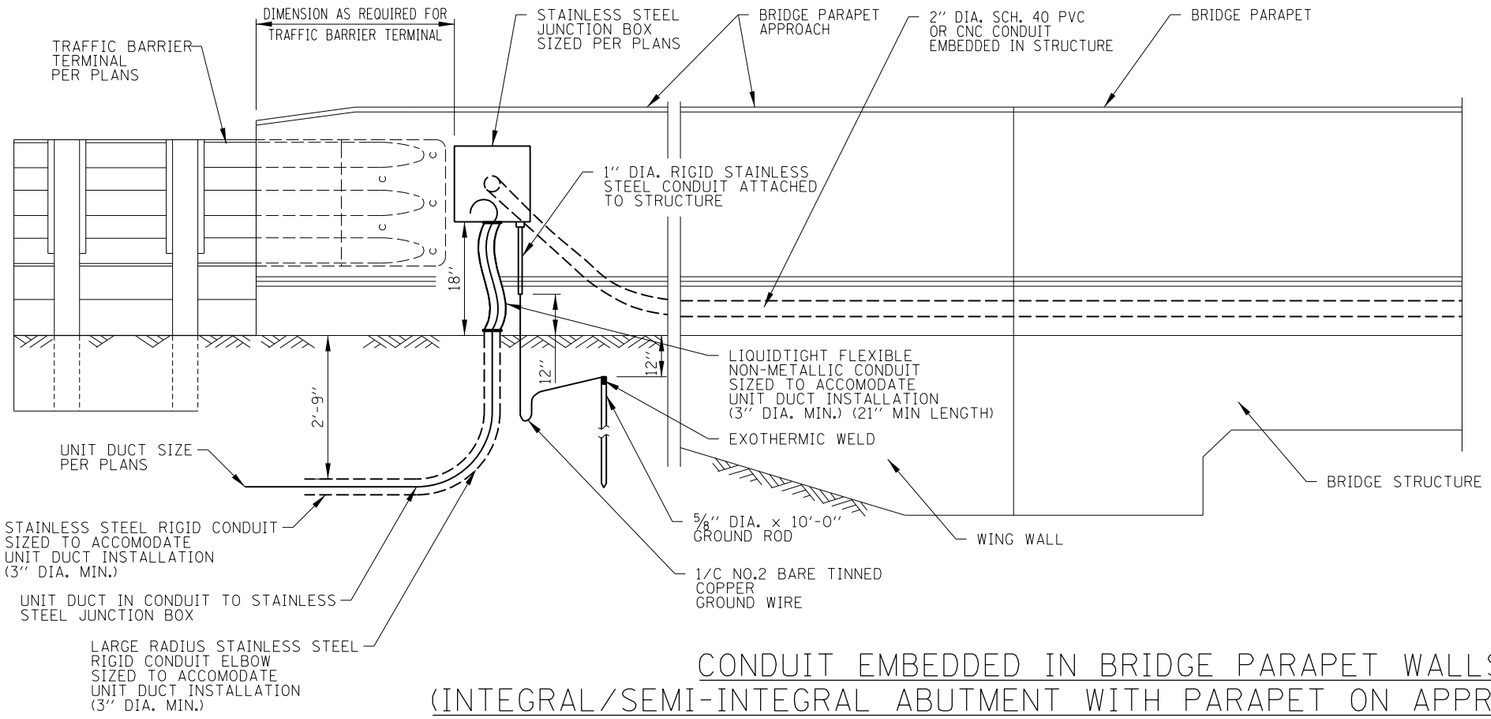

CONDUIT EMBEDDED IN BRIDGE PARAPET WALLS
(INTEGRAL/SEMI-INTEGRAL ABUTMENT WITH PARAPET ON APPROACH PAVEMENT)

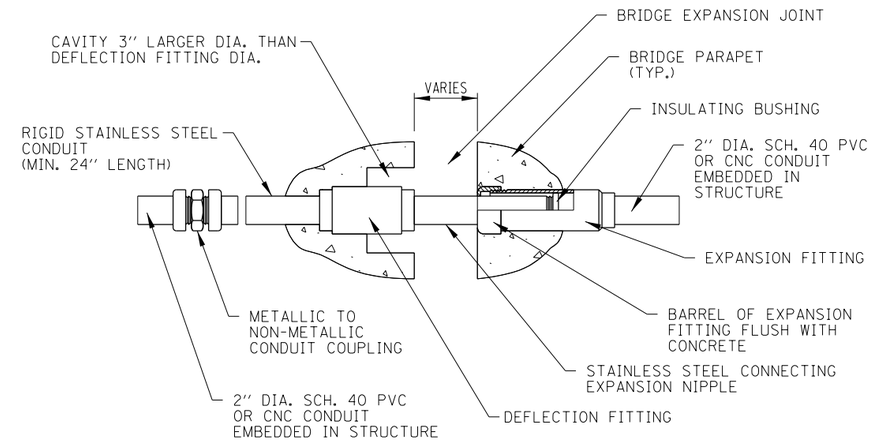

COMBINATION EXPANSION/ DEFLECTION FITTING

(SEE NOTES 4 & 5)

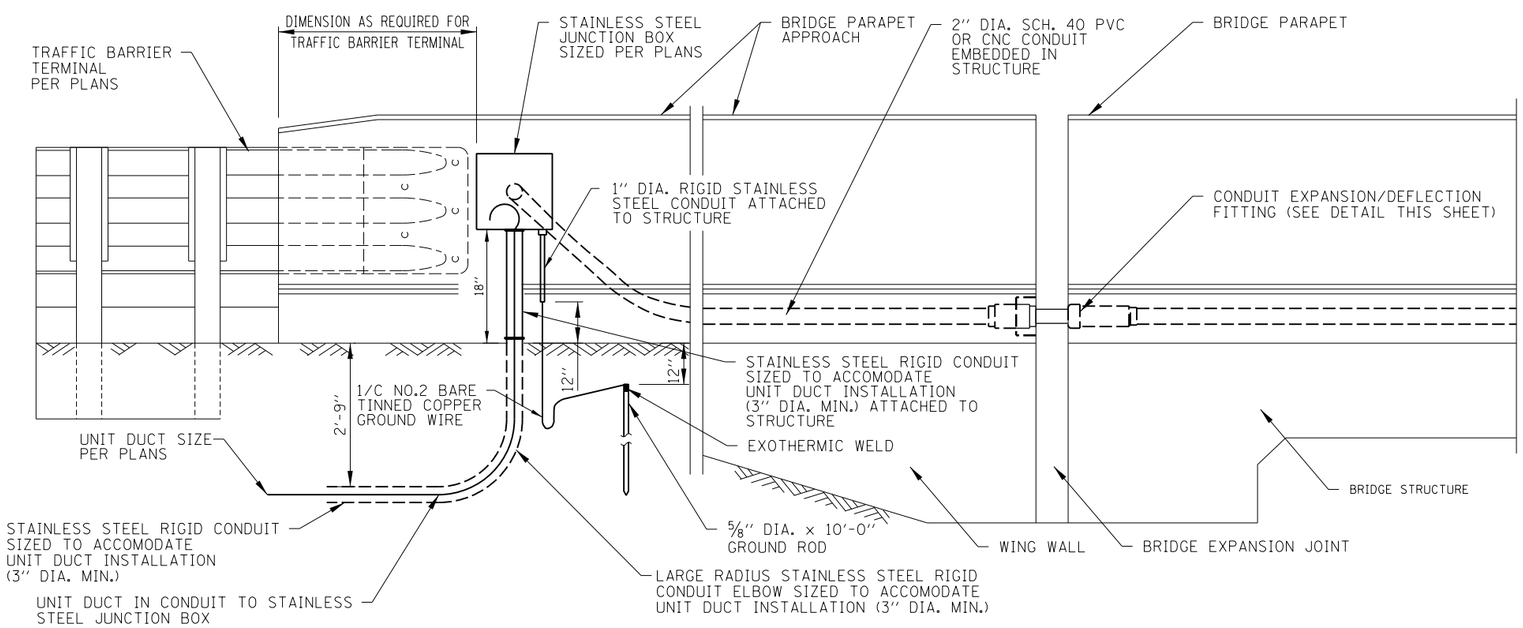

CONDUIT EMBEDDED IN BRIDGE PARAPET WALLS
(JOINTED ABUTMENT WITH PARAPET ON APPROACH PAVEMENT)

NOTE:
SEE SHEET 1 OF THIS SERIES FOR NOTES.

Paul Kovacs
APPROVED ..... CHIEF ENGINEER DATE 2-7-2012

SHEET 2 OF 4

Illinois Tollway

BRIDGE
CONDUIT DETAILS

STANDARD H3-03

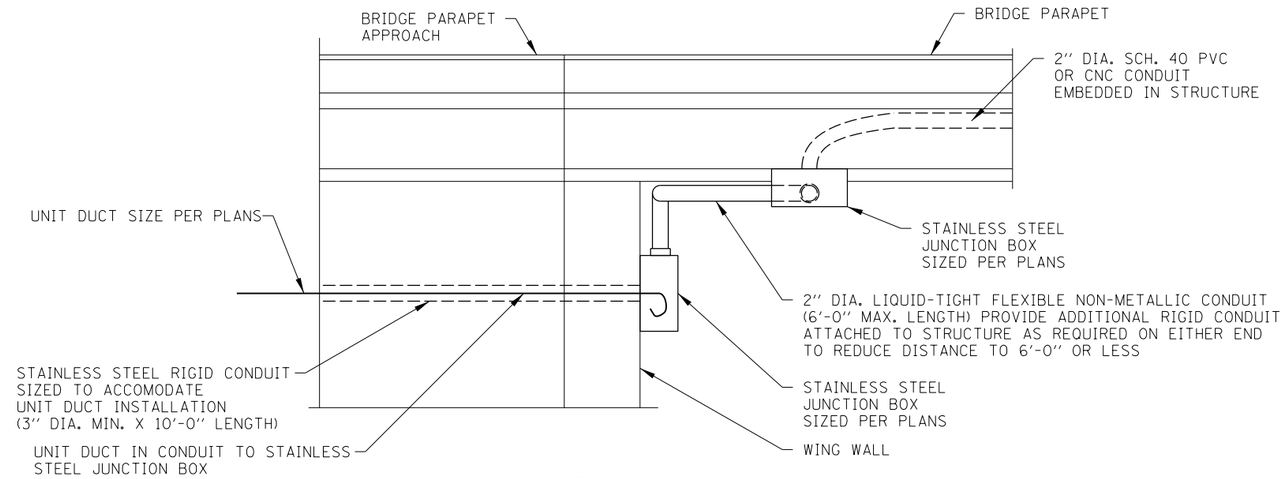

PLAN

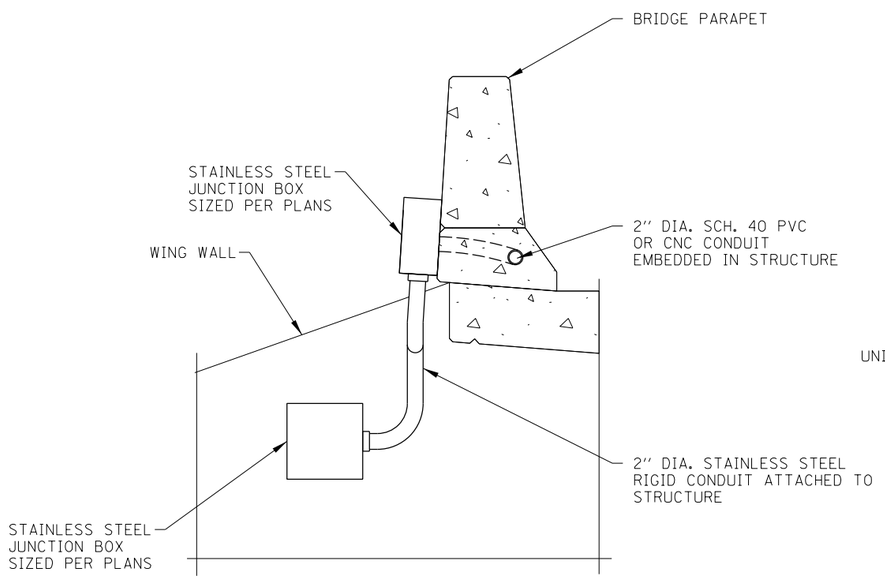

SECTION A-A

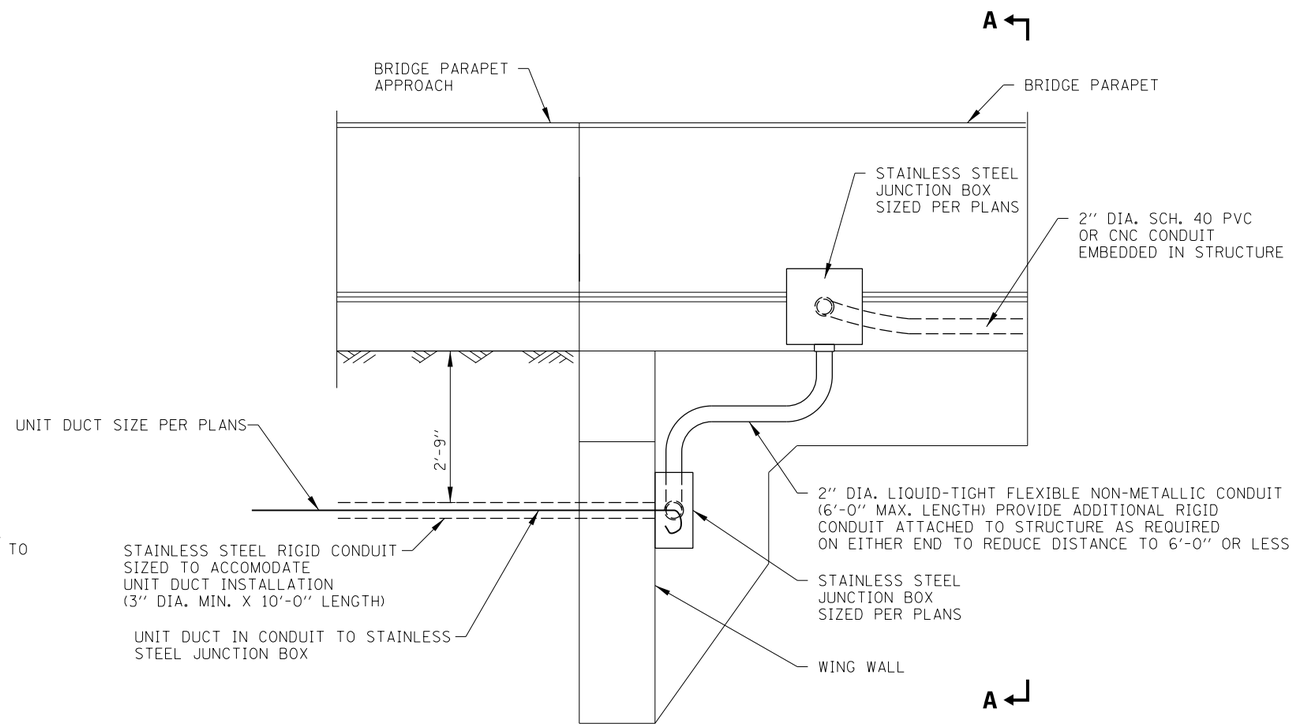

ELEVATION

NOTE:
SEE SHEET 1 OF THIS SERIES FOR NOTES.

Illinois Tollway

BRIDGE
CONDUIT DETAILS

STANDARD H3-03

CONDUIT EMBEDDED IN BRIDGE PARAPET WALLS
(INTEGRAL/SEMI-INTEGRAL ABUTMENT WITH PARAPET ENDING ON BRIDGE DECK)

Paul Kovacs
APPROVED ..... CHIEF ENGINEER
DATE 2-7-2012

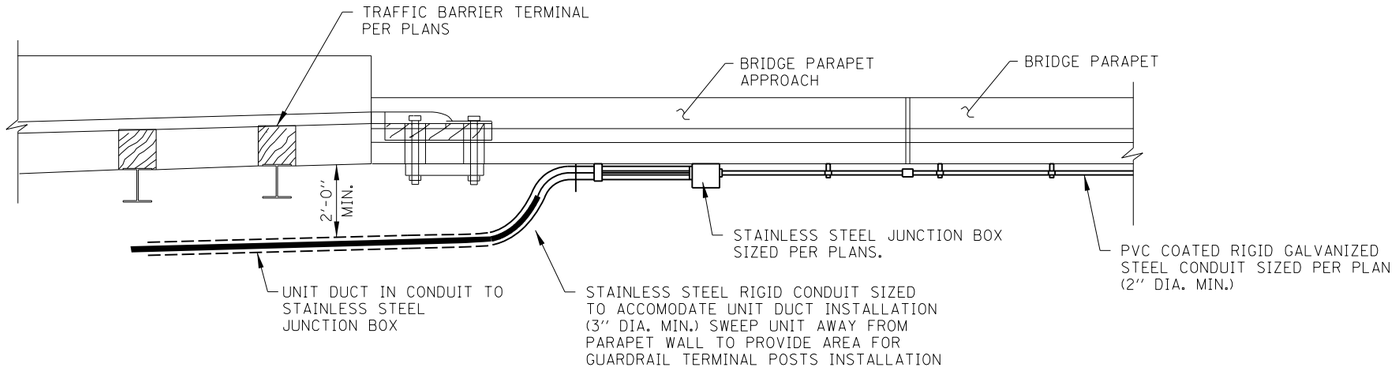

PLAN VIEW

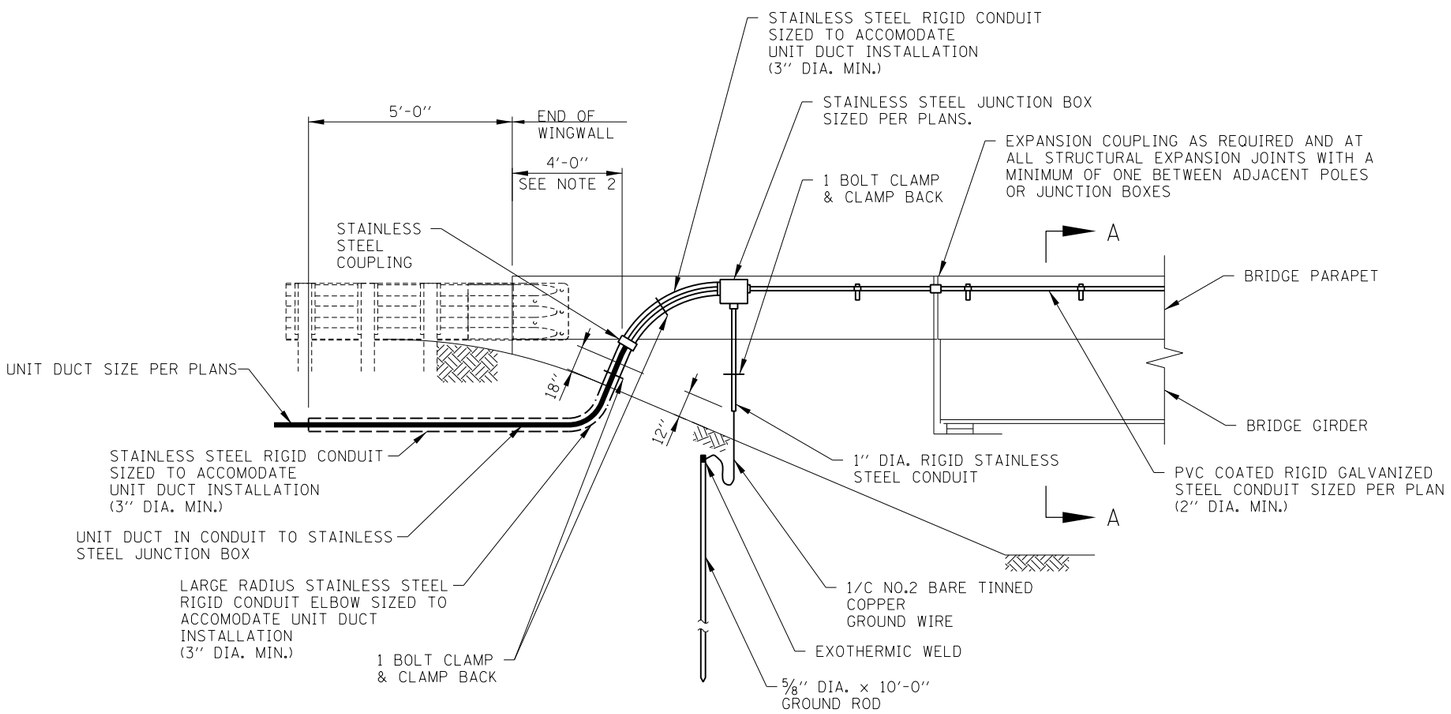

ELEVATION OF TYPICAL WINGWALL CONDUIT TRANSITION

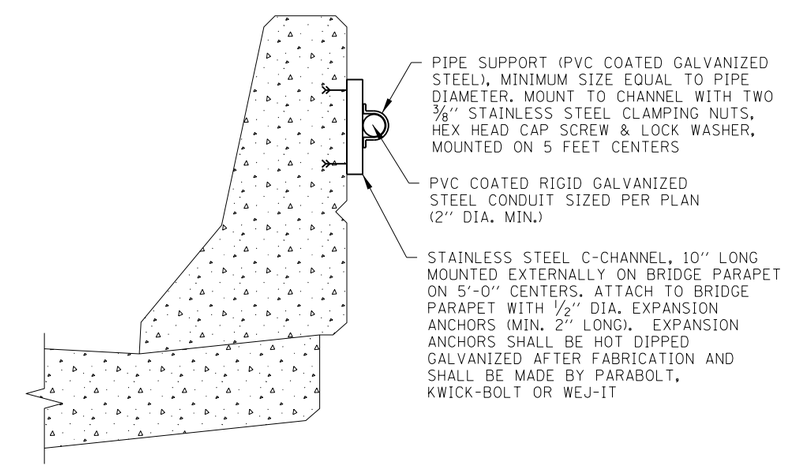

SECTION A-A

SHEET 4 OF 4

Illinois Tollway

BRIDGE
CONDUIT DETAILS

STANDARD H3-03

Paul Kovacs
APPROVED ..... CHIEF ENGINEER DATE 2-7-2012

CONDUIT ATTACHED TO BRIDGE PARAPET

NOTE:
SEE SHEET 1 OF THIS SERIES FOR NOTES.

NOTES:

1. HEAVY-DUTY HANDHOLE LOCATED IN UNPAVED AREAS AND NOT SHIELDED BY GUARDRAIL SHALL BE CONSTRUCTED WITH THE TOP FLUSH WITH THE ADAJACENT SLOPE.
2. HEAVY-DUTY HANDHOLE SHALL BE CONSTRUCTED IN NON-PAVED AREAS. THE FRAME AND HINGED COVER SHALL BE EITHER NEENAH FOUNDRY R-6662-PS WITH TYPE G LIFTING HANDLE OR EAST JORDAN IRON WORKS EJ 8216 WITH MPIC OR APPROVED EQUAL. THE HINGED COVER SHALL BE PROVIDED WITH A LIFT ASSIST MECHANISM. THERE SHALL BE TWO SETS OF HINGES AND THE DESIGN SHALL ALLOW FOR THE COVER TO OPEN > 90 DEGREES. THE COVER SHALL BE PROVIDED WITH A HOLD OPEN SAFETY ARM THAT CATCHES TO PREVENT ACCIDENTAL CLOSURE. THE COVER SHALL ALSO BE ABLE TO BE MADE FULLY REMOVABLE. THE FRAME COVER SHALL BE INSTALLED WITH THE HINGES TO THE SIDE FACING APPROACHING TRAFFIC.
3. AGGREGATE FOR FRENCH DRAIN SHALL BE PER ARTICLE 1003.04 OF THE STANDARD SPECIFICATIONS.
4. 10 FEET OF EXTRA CABLE SHALL BE COILED IN EACH HANDHOLE.
5. TRENCH AND BACKFILL FOR ELECTRICAL WORK SHALL BE INCLUDED IN THE COST OF THE UNDERGROUND RACEWAY AND WILL NOT BE MEASURED FOR PAYMENT.
6. ALL EQUIPMENT SHALL BE GROUNDED AND BONDED IN ACCORDANCE WITH THE NATIONAL ELECTRICAL CODE AND THE NATIONAL ELECTRICAL SAFETY CODE.
7. THE HANDHOLE COVER SHALL BE LETTERED "ELECTRIC". LETTERING SHALL BE 2" FLAT FACE GOTHIC AND BE FLUSH WITH THE SLIP RESISTANT SURFACE.

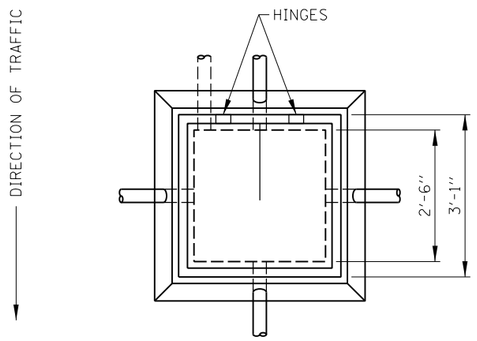

PLAN

EAST JORDAN
EJ 8216

NEENAH
R-6662-PS

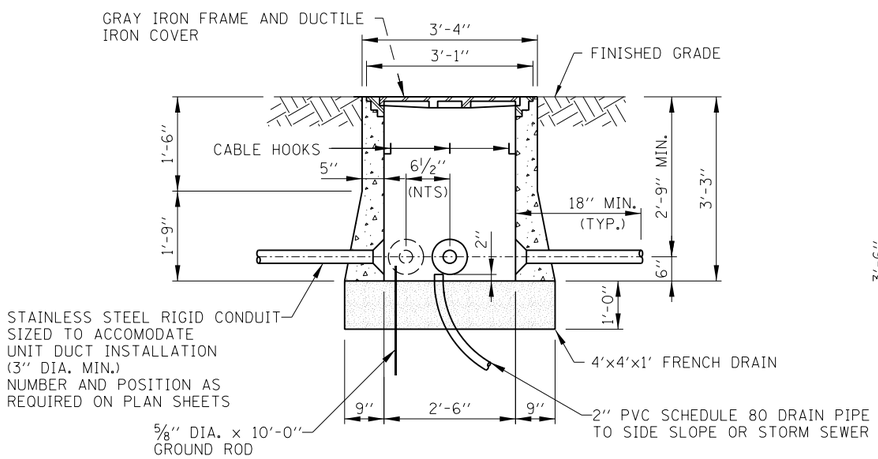

ELEVATION

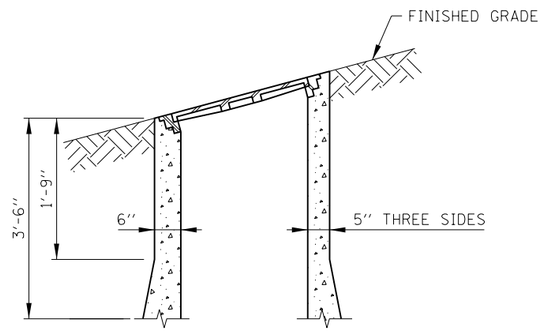

SLOPE INSTALLATION

HEAVY-DUTY HANDHOLE DETAILS

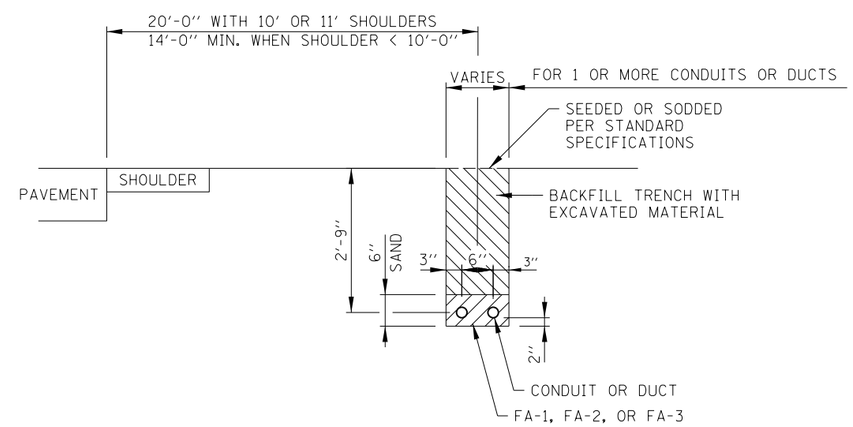

TRENCHING FOR CONDUIT IN NON-PAVED AREAS

Paul Kovacs
APPROVED ..... CHIEF ENGINEER DATE 2-7-2012

DATE	REVISIONS
2-07-2012	MODIFY TRENCH DETAIL, NEW HANDHOLE.
	DETAILS AND REVISED NOTES.
3-11-2015	DELETED NON HEAVY-DUTY HANDHOLE.
3-31-2016	NEW HINGED COVER AND REVISED NOTES.

Illinois Tollway

HEAVY-DUTY HANDHOLE AND BURIED WIRING DETAILS

STANDARD H4-03

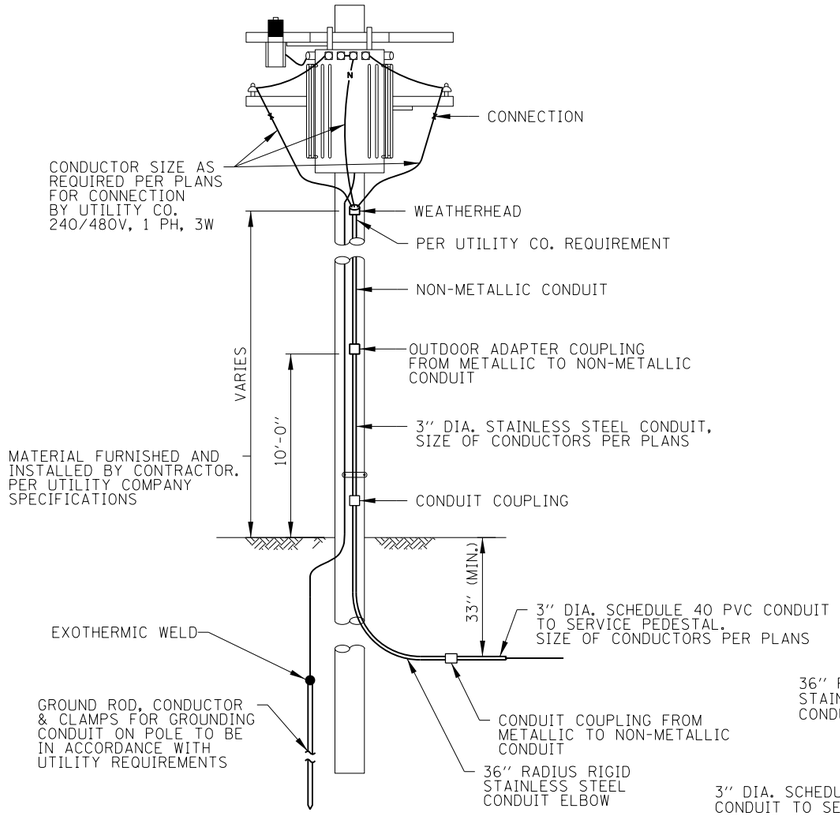

UTILITY SERVICE POLE

SUBJECT TO UTILITY COMPANY APPROVAL

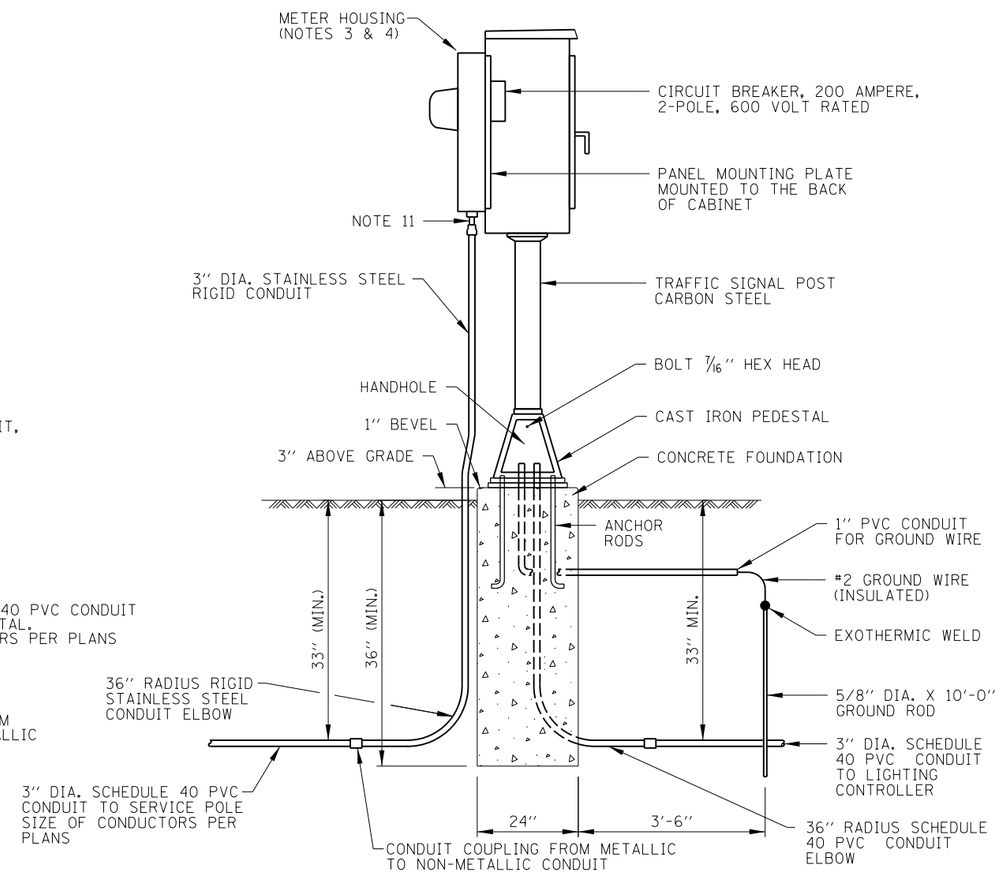

SERVICE PEDESTAL WITH METER DETAIL

(NOTE 9)

NOTES:

1. CABINETS, CABINET POSTS AND CABINET PEDESTALS SHALL BE PRIMED AND PAINTED. THE EXTERIOR SHALL HAVE TWO EPOXY FINISH COATS OF ANSI-61 GRAY. THE INTERIOR SHALL BE PAINTED WHITE.
2. METER HOUSING SHALL BE MOUNTED TO BACK WALL OF CONTROL CABINET. PROVIDE A GATE IN ROW FENCE TO ALLOW UTILITY ACCESS TO READ THE METER.
3. CABLES FROM METER HOUSING SHALL PASS THROUGH BACK WALL OF CONTROL CABINET.
4. METER HOUSING SHALL BE MILBANK CATALOG NUMBER U8949.
5. THE CABINET SHALL BE 36"H x 20"W x 15"D, FABRICATED FROM ALUMINUM WITH A MINIMUM THICKNESS OF .125", RATED NEMA TYPE 3R AND HAVE A MOUNTING BACK PLATE.
6. THE CABINET DOOR SHALL HAVE A CONTINUOUS HINGE THAT IS BOLTED TO THE CABINET AND DOOR WITH 1/4-20 STAINLESS STEEL CARRIAGE BOLTS AND NY-LOCK NUTS. THE HINGE SHALL BE INSTALLED ON THE RIGHT SIDE WHEN FACING THE CABINET AND BE MADE OF STAINLESS STEEL WITH A 0.25 INCH DIAMETER STAINLESS STEEL HINGE PIN. THE HINGE PIN SHALL BE CAPPED TOP AND BOTTOM BY WELD TO RENDER IT TAMPER-PROOF. THE CABINET SHALL HAVE A GASKET THAT FORMS A WEATHER-TIGHT SEAL BETWEEN THE CABINET AND DOOR. THE DOOR LATCHING MECHANISM SHALL BE THE 3-POINT DRAW ROLLER TYPE. WHEN THE DOOR IS CLOSED AND LATCHED, IT WILL BE LOCKED. THE LATCHING HANDLE SHALL BE FABRICATED FROM A 0.75" STAINLESS STEEL ROUND BAR AND SHALL HAVE A PROVISION FOR PADLOCKING IN THE CLOSED POSITION.
7. THE ENCLOSURE SHALL BE EQUIPPED WITH TWO ADJUSTABLE "C" MOUNTING CHANNELS WELDED ON BOTH SIDE WALLS AND BACK WALL OF THE ENCLOSURE, ALLOWING VERSATILE POSITIONING OF SHELVES OR PANELS. MOUNTING CHANNELS SHALL BE FACTORY PAINTED SAME COLOR AS INTERIOR OF CABINET.
8. CABINET DOOR SHALL NOT HAVE COMPARTMENT DOORS OR LOUVERS.
9. THE CABINET, POST, PEDESTAL BASE, METER HOUSING, FOUNDATION, GROUND ROD, GROUND WIRE AND GROUND CONNECTIONS SHALL BE INCLUDED IN THE COST OF EACH ELECTRIC SERVICE INSTALLATION.
10. CONTRACTOR MUST COORDINATE WITH PEDESTAL BASE SUPPLIER AND FURNISH THE NECESSARY ANCHOR RODS.
11. PROVIDE A 2½" CONDUIT HUB, 2½" NIPPLE AND 2½" TO 3" CONDUIT REDUCER FITTING.
12. ALL EQUIPMENT SHALL BE GROUNDED AND BONDED IN ACCORDANCE WITH THE NATIONAL ELECTRICAL CODE AND THE NATIONAL ELECTRICAL SAFETY CODE.

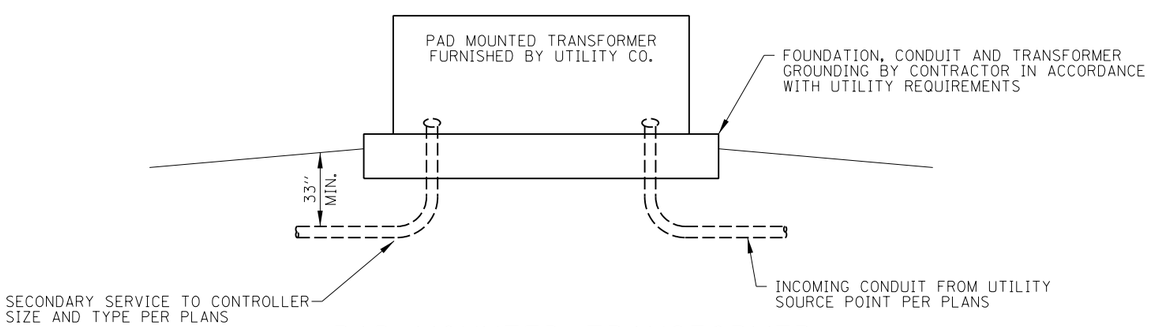

PAD MOUNTED TRANSFORMER

SUBJECT TO UTILITY COMPANY APPROVAL

Paul Kovacs
APPROVED ..... CHIEF ENGINEER
DATE 2-7-2012

Illinois Tollway

DATE	REVISIONS
2-07-2012	NEW SERVICE PEDESTAL DETAIL.
	MODIFIED UTILITY SERVICE POLE.
3-11-2015	REVISED CONDUITS TO STAINLESS STEEL.
3-31-2016	REVISED CONDUIT DEPTH.

SERVICE POLE AND PEDESTAL DETAILS

STANDARD H5-03

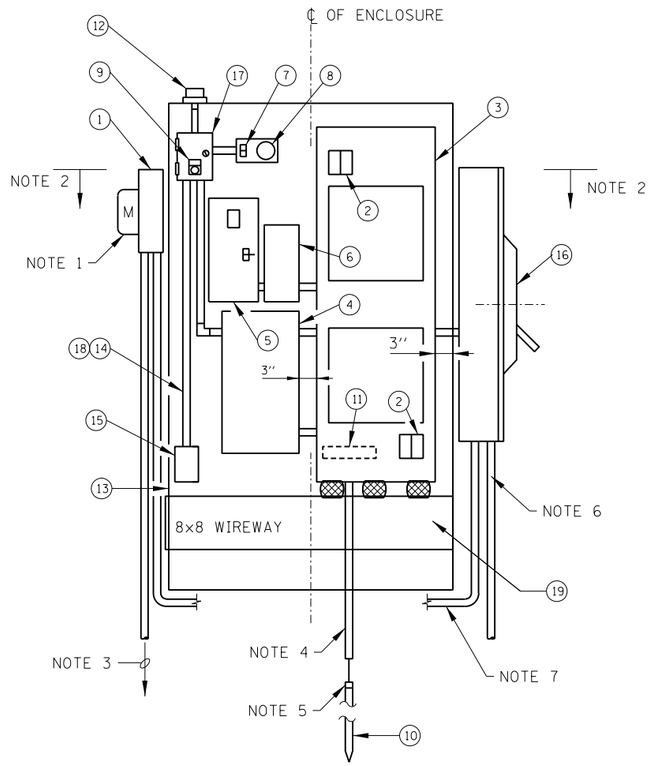

INTERIOR EQUIPMENT LAYOUT

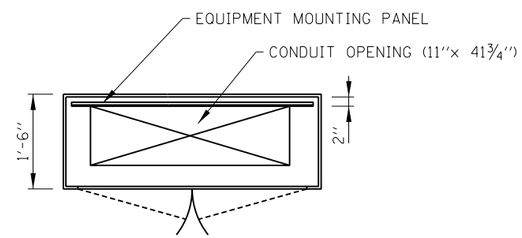

SECTION B-B

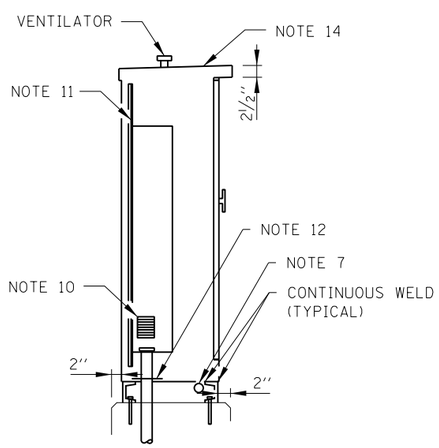

SECTION A-A

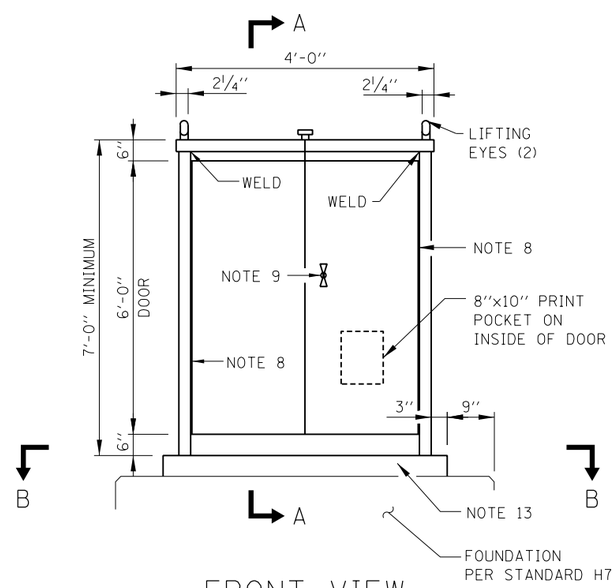

FRONT VIEW

CONTROL CONSOLE DETAILS (EXTERIOR INSTALLATION)

NOTES:

1. PROVIDE METER HOUSING WHEN SERVICE PEDESTAL IS NOT PROVIDED.
2. 5'-0'' MAXIMUM HEIGHT ABOVE GRADE.
3. STAINLESS STEEL CONDUIT TO UTILITY SERVICE AS INDICATED ON PLANS WHEN SERVICE PEDESTAL IS NOT PROVIDED.
4. ¾'' PVC CONDUIT IN CONCRETE, SEE FOUNDATION DETAILS (STANDARD H7).
5. EXOTHERMIC WELD NO. 2 BARE TINNED COPPER GROUND CABLE TO GROUND ROD.
6. TO SERVICE PEDESTAL AS INDICATED ON PLANS.
7. CONDUIT AND CABLE BETWEEN METER FITTING AND DISCONNECT SWITCH ROUTED BETWEEN CONTROL CONSOLE AND CONCRETE FOUNDATION, WHEN A METER HOUSING IS REQUIRED. CONDUIT AND CABLE SHALL BE THE SAME AS THE SERVICE.
8. CONTINUOUS STAINLESS STEEL PIANO HINGES.
9. 3-POINT LATCH VAULT TYPE HANDLE WITH MASTER KEYED CHICAGO CYLINDER LOCK CATALOG NO. 60
10. SCREENED LOUVERS ON SIDES OF CABINET.
11. 10 GAUGE GALVANIZED STEEL EQUIPMENT MOUNTING PANEL (PAINTED WHITE).
12. REMOVABLE #10 GAUGE 13''×43¾'' STAINLESS STEEL PLATE. DRILL PLATE AS REQUIRED FOR CONDUIT ENTRY.
13. 4'' x 2½'' STAINLESS STEEL CHANNEL (2 REQUIRED-FRONT AND BACK). EXTEND CHANNEL 3'' BEYOND ENCLOSURE (CONTINUOUSLY WELD CHANNEL TO ENCLOSURE).
14. TOP SLOPED ½'' TO REAR FOR DRAINAGE.
15. FOR WIRING DIAGRAM SEE SHEET 2 OF 4 IN THIS SERIES.
16. ALL EQUIPMENT SHALL BE GROUNDED AND BONDED IN ACCORDANCE WITH THE NATIONAL ELECTRICAL CODE AND THE NATIONAL ELECTRICAL SAFETY CODE.

ITEM DESCRIPTION:

(1) METER HOUSING

(2) SECONDARY SURGE ARRESTERS, 2 POLE, 650 VOLT.

(3) MAIN PANELBOARD IN A NEMA 1 ENCLOSURE, 480/240 VOLT, 1 PHASE, 3 WIRE, 2 SECTION, 200 AMP, 2 POLE MAIN CIRCUIT BREAKER 65,000 AMPERES SYMMETRICAL INTERRUPTING CAPACITY WITH CIRCUIT BREAKERS PER SCHEDULE ON PLANS. DOOR HINGES ON RIGHT SIDE.

(4) LIGHTING CONTACTOR, 480 VOLT, 200 AMP, 2 POLE, 120 VOLT CONTROL, WITH RELAY FOR 2 WIRE CONTROL, ONE NORMALLY OPEN AND ONE NORMALLY CLOSED AUXILIARY CONTACTS, CONTROL LINE FUSE, IN A NEMA 1 ENCLOSURE.

(5) SECONDARY BREAKER, 15 AMPERE TRIP, 120 VOLT, SINGLE POLE, 65,000 AMPERES SYMMETRICAL INTERRUPTING CAPACITY IN A NEMA 1 SURFACE MOUNTED ENCLOSURE.

(6) STEP DOWN TRANSFORMER, 1500 VA, 480 VOLT PRIMARY, 120 VOLT SECONDARY, SINGLE PHASE, 60 HERTZ, DRY TYPE, NEMA 3R ENCLOSURE.

(7) SINGLE POLE, 15 AMPERE SWITCH, IN A NEMA 1 ENCLOSURE (WITH ITEM 8), RATED AT 120-277 VAC.

(8) LAMP HOLDER 660W, 600V, MOUNTED ON A NEMA 1 ENCLOSURE (WITH ITEM 7), W/LED LAMP.

(9) HAND-OFF-AUTO SELECTOR SWITCH WITH LEGEND PLATE. MOUNTED IN THE COVER OF ITEM 17.

(10) ⅝'' DIA. × 10'-0'' LONG GROUND ROD DRIVEN EXTERNAL TO THE FOUNDATION WITHIN GROUND WELL.

(11) GROUND BUS MOUNTED IN PANELBOARD ENCLOSURE.

(12) PHOTO ELECTRIC CONTROL SWITCH,WITH RECEPTACLE.

(13) NEMA TYPE 3R STAINLESS STEEL ENCLOSURE WITH DRIP SHIELD AND STAINLESS STEEL HARDWARE. ENCLOSURE SHALL CONFORM TO J.I.C. STANDARDS WITH CELLULAR NEOPRENE GASKETED DOORS, ALL SEAMS CONTINUOUSLY WELDED, 10 GAUGE STAINLESS STEEL BODY, REMOVABLE STEEL PAINTED WHITE) PANEL INSIDE THE BACK AND A FACTORY INSTALLED DRIP SHIELD. THE ENCLOSURE SHALL HAVE CONTINUOUS HINGED DOORS MEETING IN THE CENTER, OVERLAPPED AND GASKETED, WITH NO CENTERPOST. AN OIL TIGHT KEY LOCKING HANDLE WITH 3 POINT LATCH SHALL BE PROVIDED (FURNISH 6 KEYS). EACH END OF THE ENCLOSURE SHALL HAVE A SCREENED, GASKETED VENTILATING LOUVER AND THE TOP OF THE ENCLOSURE SHALL HAVE A VENTILATOR. INTERNAL CONDUIT SHALL HAVE LOCKNUTS, INSULATING BUSHING AND CONDULET FITTINGS AS REQUIRED. INTERNAL WIRING SHALL BE XLP INSULATED NEC TYPE RHH/RHW-2. PROVIDE A WIRING DIAGRAM IN A PRINT POCKET ON THE INSIDE OF THE CABINET DOOR.

(14) INTERNAL CONTROL WIRING SHALL BE #12 AWG, STRANDED, XLP INSULATED NEC TYPE RHH/RHW-2 RATED 600 VOLT, WITH SUITABLE COLOR CODING TO BE APPROVED BY THE ENGINEER BEFORE CONSTRUCTION.

(15) 200 WATT, 120 VOLT CABINET HEATER WITH INTEGRAL THERMOSTAT.

(16) SERVICE SAFETY SWITCH, 200 AMP, 600 VOLT, NON-FUSED, NEMA 4X STAINLESS STEEL ENCLOSURE.

(17) NEMA TYPE 1, 8''×6''×4'' JUNCTION BOX & COVER WITHOUT KNOCKOUTS. ITEM 9 IS MOUNTED IN THE COVER.

(18) INTERNAL CONDUIT AND FITTINGS SHALL BE ¾'' MINIMUM.

(19) 8''×8'' WIREWAY WITH 3-3'' NIPPLES.

SHEET 1 OF 2

Illinois Tollway

DATE	REVISIONS
2-07-2012	MODIFY ENCLOSURE DIMENSIONS. REVISED NOTES AND ITEM DESCRIPTIONS.
3-31-2014	REVISED NOTES AND ITEM DESCRIPTIONS.
3-11-2015	REVISED CONDUITS TO STAINLESS STEEL.
3-31-2016	REVISED NOTE 2.

EXTERIOR CONTROL CONSOLE DETAILS

STANDARD H6-04

Paul Kovacs
APPROVED ..... CHIEF ENGINEER
DATE 2-7-2012

NOTES:

1. TO UTILITY SERVICE. 480/240V, 1 PHASE, 3 WIRE, GROUNDED, WHEN A METER HOUSING IS REQUIRED (FED FROM PAD MOUNTED UTILITY TRANSFORMER WITHIN ILLINOIS TOLLWAY RIGHT-OF-WAY).
2. TO SERVICE PEDESTAL, 480/240V, 1 PHASE, 3 WIRE, GROUNDED. SEE STANDARD H5.
3. ITEM NUMBERS REFER TO EQUIPMENT LIST ON SHEET 1 OF THIS SERIES.
4. PROVIDE CIRCUIT BREAKERS PER SCHEDULE ON THE CONTRACT PLANS (MINIMUM OF 12).
5. FOR INTERIOR EQUIPMENT LAYOUT SEE SHEET 1 OF THIS SERIES.
6. ALL EQUIPMENT SHALL BE GROUNDED AND BONDED IN ACCORDANCE WITH THE NATIONAL ELECTRICAL CODE AND THE NATIONAL ELECTRICAL SAFETY CODE.

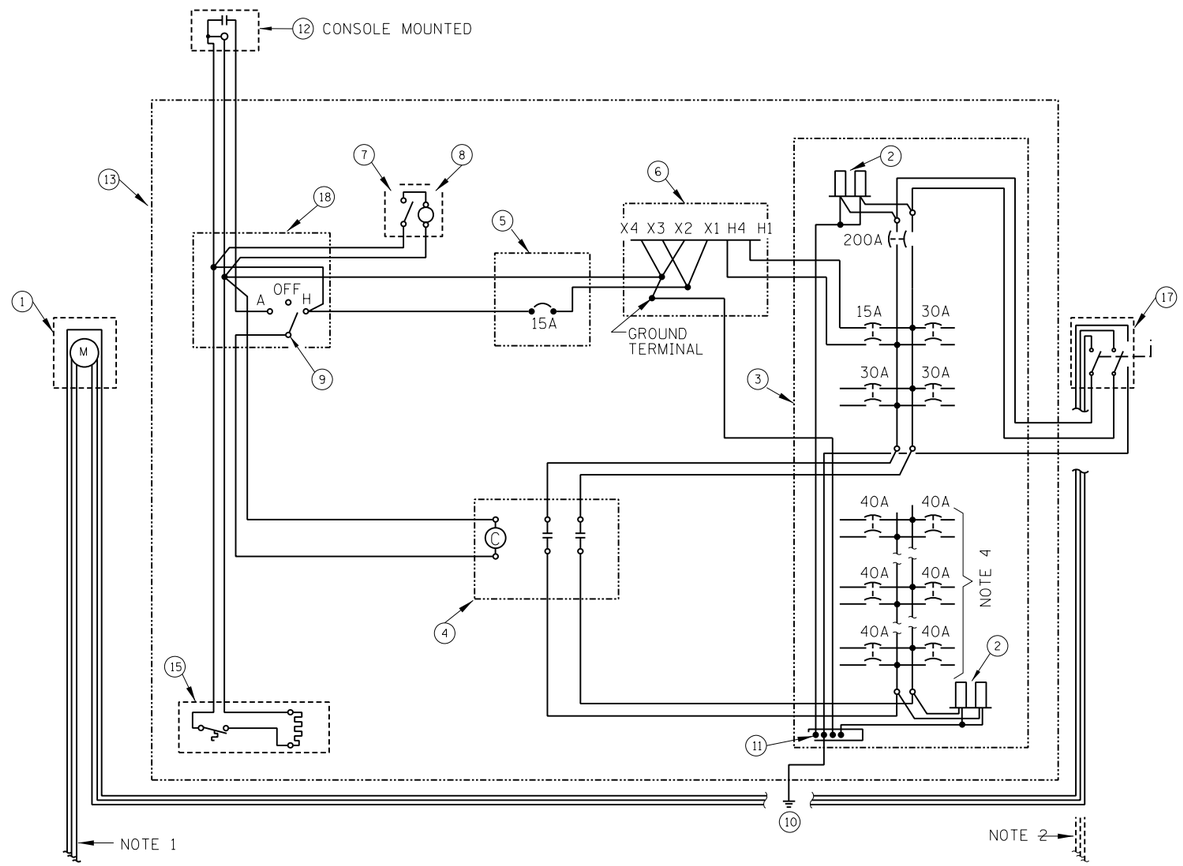

CONTROL CONSOLE WIRING DIAGRAM

SHEET 2 OF 2

Illinois Tollway

EXTERIOR CONTROL CONSOLE DETAILS

STANDARD H6-04

CONTROL CONSOLE DETAILS
(EXTERIOR INSTALLATION)

Paul Kovacs
APPROVED ..... CHIEF ENGINEER
DATE 2-7-2012

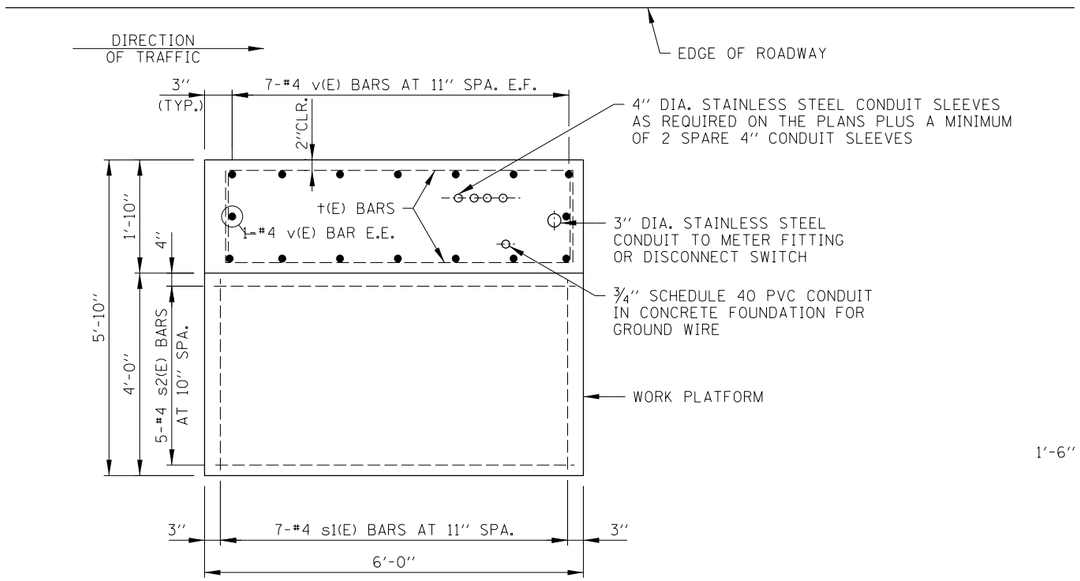

PLAN

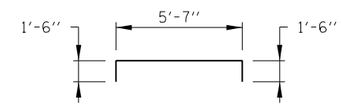

†(E) BARS

NOTES:

1. EXPOSED CONCRETE EDGES SHALL HAVE ¾"×45° CHAMFERS EXCEPT WHERE SHOWN OTHERWISE. CHAMFERS ON VERTICAL EDGES SHALL BE CONTINUED A MINIMUM OF ONE FOOT BELOW FINISHED GROUND LEVEL.
2. ALL REINFORCEMENT BARS SHALL BE EPOXY COATED (E) AND SHALL CONFORM TO THE REQUIREMENTS OF AASHTO M-31 (ASTM A615), GRADE 60 DEFORMED BARS.
3. REINFORCEMENT BENDING DETAILS SHALL BE IN ACCORDANCE WITH THE "MANUAL OF STANDARD PRACTICE FOR DETAILING REINFORCED CONCRETE STRUCTURES", ACI 315, LATEST EDITION.
4. REINFORCEMENT BAR BENDING DIMENSIONS ARE OUT TO OUT.
5. COVER FROM THE FACE OF CONCRETE TO FACE OF REINFORCEMENT BARS SHALL BE 3" FOR ALL SURFACES UNLESS OTHERWISE SHOWN.
6. FOR CLARITY, CONTROL CONSOLE AND RAILINGS ARE NOT SHOWN IN PLAN VIEW.
7. ALL EQUIPMENT SHALL BE GROUNDED AND BONDED IN ACCORDANCE WITH THE NATIONAL ELECTRICAL CODE AND THE NATIONAL ELECTRICAL SAFETY CODE.

REINFORCEMENT BARS SCHEDULE

BARS	NO.	SIZE	LENGTH	WT. LB.	SHAPE
v(E)	16	#4	4'-0"	43	———
†(E)	10	#4	8'-7"	57	⌐ ¬
s1(E)	7	#4	3'-8"	17	———
s2(E)	5	#4	5'-8"	19	———

BILL OF MATERIAL

DESCRIPTION	UNIT	QUANTITY
REINF. BARS, EPOXY COATED	POUND	136
CLASS "SI" CONCRETE	CU. YD.	2.3

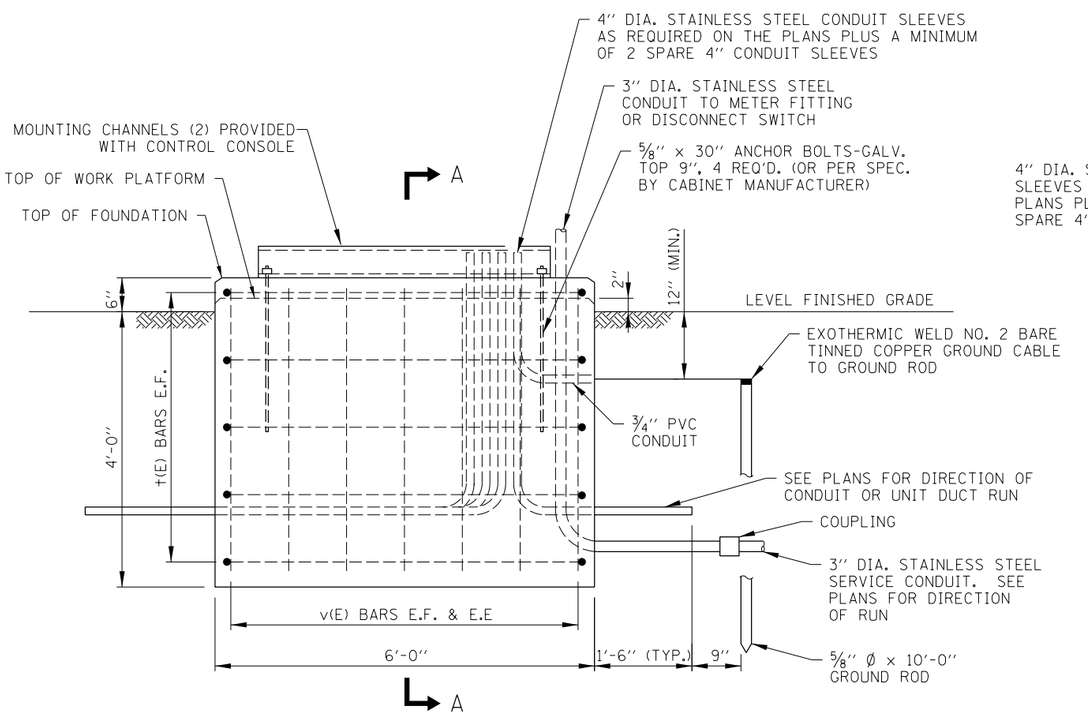

ELEVATION

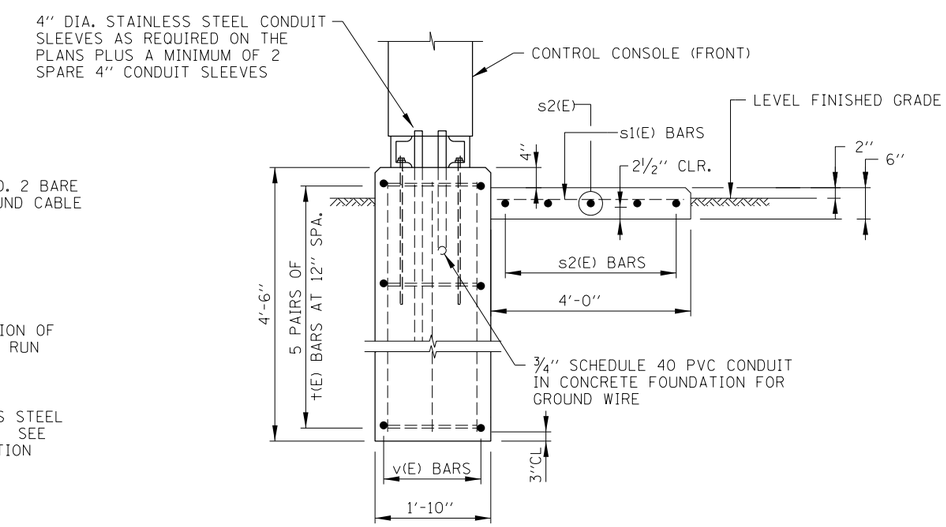

SECTION A-A

SHEET 1 OF 2

TYPE A CONTROL CONSOLE FOUNDATION

Paul Kovacs
APPROVED ..... CHIEF ENGINEER
DATE 2-7-2012

DATE	REVISIONS
2-07-2012	REVISED TYPE A AND TYPE B CONTROL CONSOLE FOUNDATIONS.
3-11-2015	REVISED CONDUITS TO STAINLESS STEEL.

Illinois Tollway

EXTERIOR CONTROL CONSOLE FOUNDATION DETAILS

STANDARD H7-02

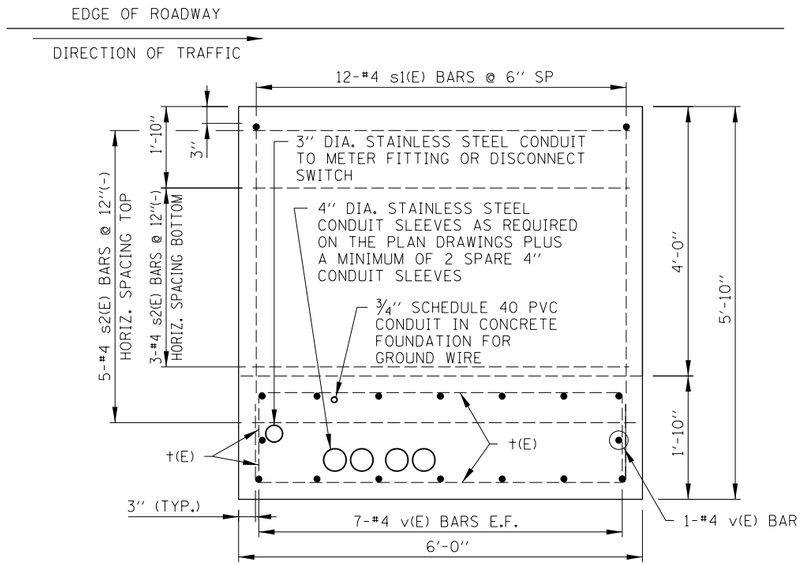

PLAN

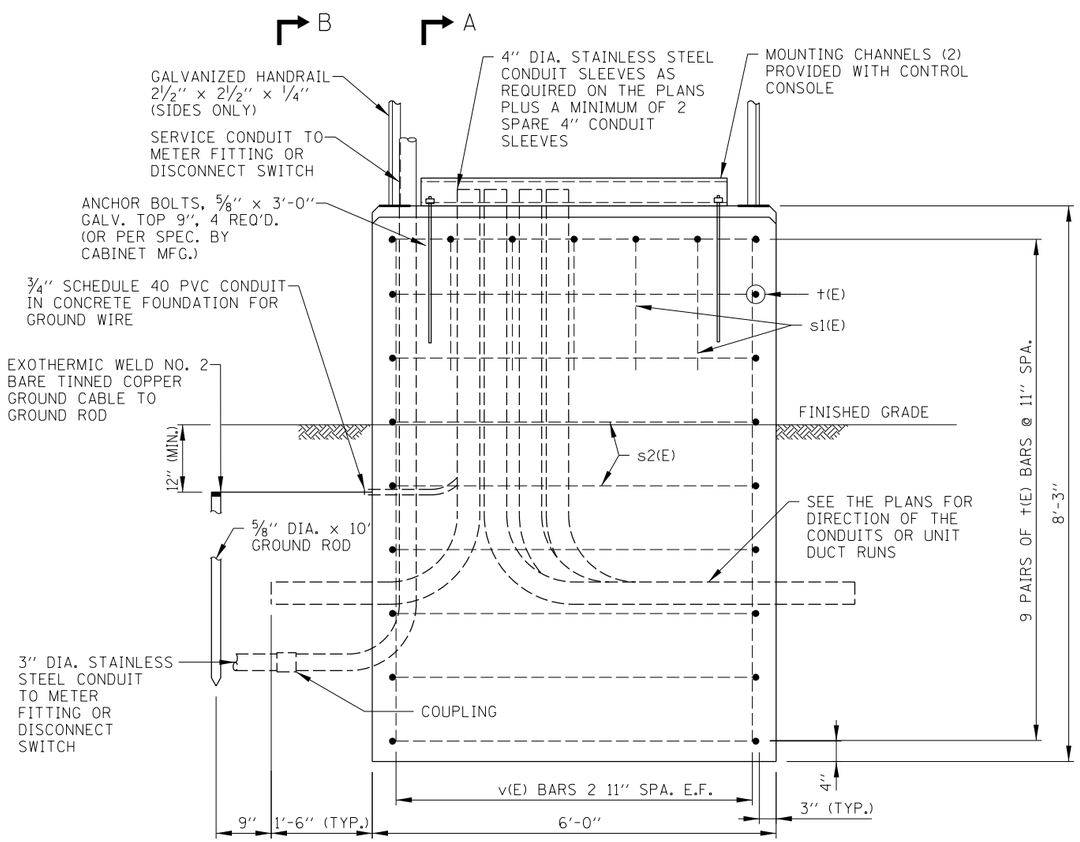

ELEVATION

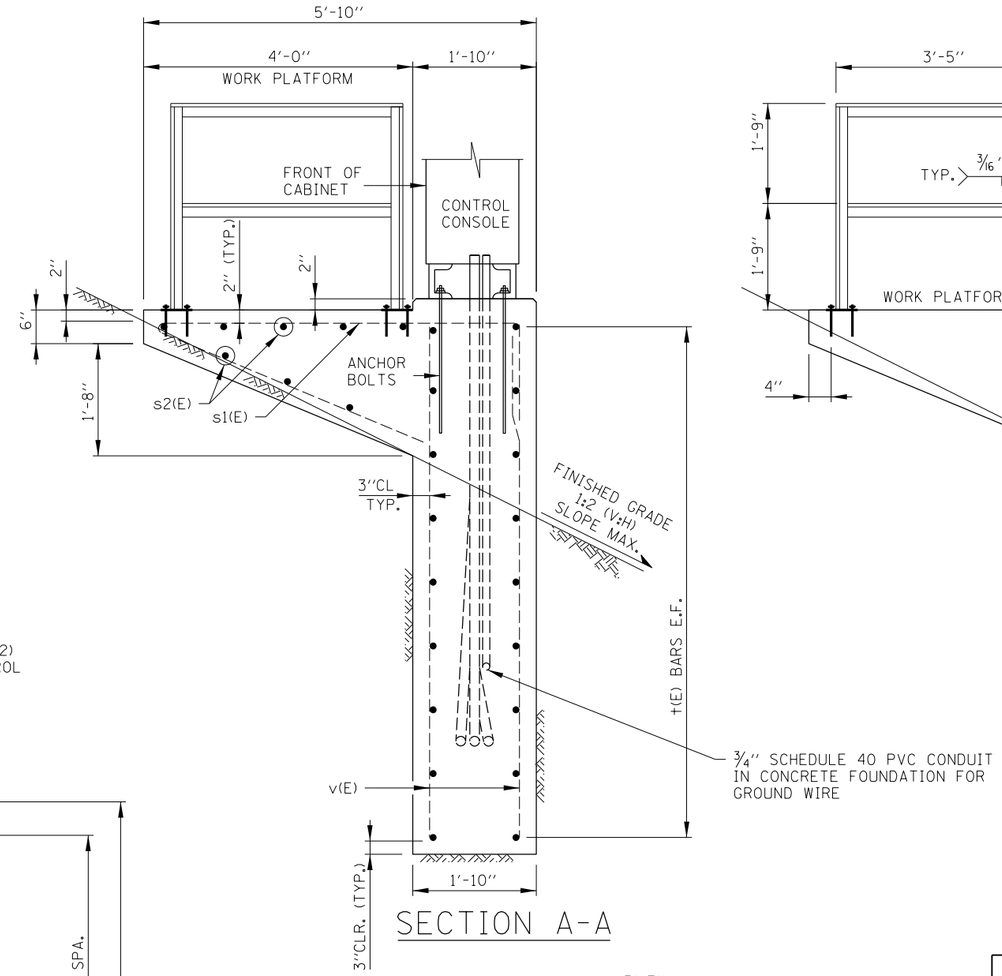

SECTION A-A

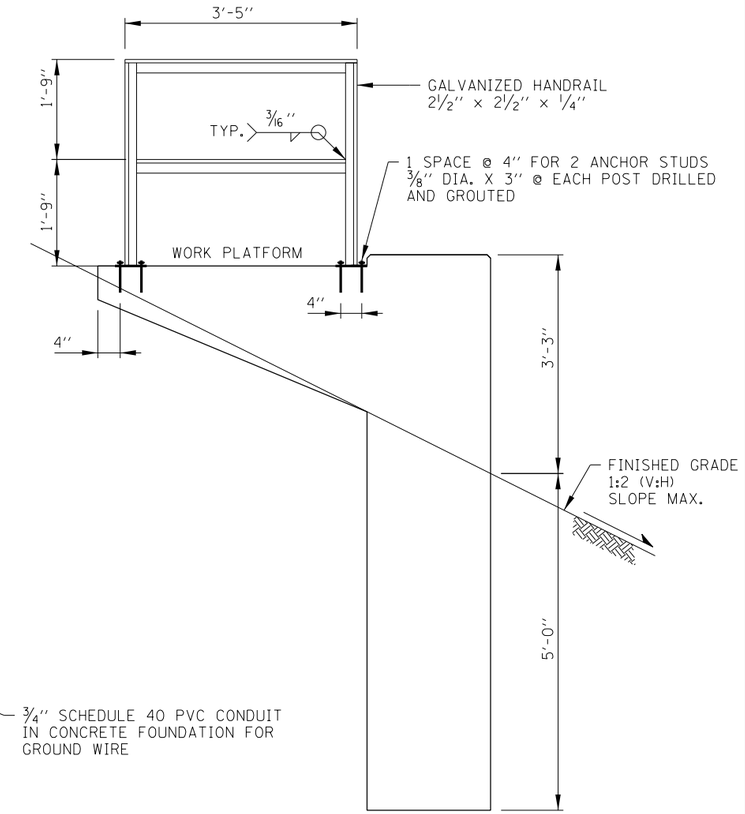

VIEW B-B

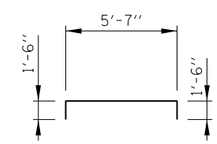

†(E) BARS

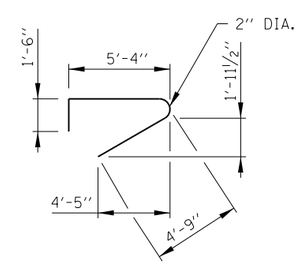

s1(E) BARS

REINFORCEMENT BARS SCHEDULE					
BARS	NO.	SIZE	LENGTH	WT. LB.	SHAPE
v(E)	16	#4	7'-10''	84	
†(E)	18	#4	8'-7''	103	
s1(E)	12	#4	11'-9''	94	
s2(E)	8	#4	5'-6''	29	

BILL OF MATERIAL		
DESCRIPTION	UNIT	QTY
REINF. BARS, EPOXY COATED	POUND	310
CLASS "SI" CONCRETE	CU. YD.	9.4
STRUCTURAL STEEL	POUND	158

SHEET 2 OF 2

Illinois Tollway

EXTERIOR CONTROL CONSOLE FOUNDATION DETAILS

STANDARD H7-02

Paul Kovacs
APPROVED CHIEF ENGINEER DATE 2-7-2012

TYPE B CONTROL CONSOLE FOUNDATION

NOTES:
SEE SHEET 1 OF THIS SERIES FOR NOTES.

NOTES:

1. PROVIDE POWER UTILITY CO. METER HOUSING AS INDICATED ON PLANS.
2. 5'-0" MAXIMUM HEIGHT ABOVE GRADE.
3. STAINLESS STEEL CONDUIT TO UTILITY SERVICE AS INDICATED ON PLANS.
4. ¾" PVC CONDUIT.
5. EXOTHERMIC WELD NO. 2 BARE TINNED COPPER GROUND CABLE TO GROUND ROD 12"-24" BELOW GRADE.
6. TO POWER UTILITY COMPANY, SERVICE AS INDICATED ON PLANS.
7. CONDUIT AND CABLE BETWEEN METER FITTING AND DISCONNECT SWITCH. CONDUIT AND CABLE SHALL BE THE SAME AS THE SERVICE.
8. LABEL ALL EQUIPMENT AS "ROADWAY LIGHTING" + DEVICE AND BUILDING# (IF APPLICABLE).
9. FOR WIRING DIAGRAM SEE SHEET 4 OF 4 IN THIS SERIES.
10. ALL EQUIPMENT SHALL BE GROUNDED AND BONDED IN ACCORDANCE WITH THE NATIONAL ELECTRICAL CODE AND THE NATIONAL ELECTRICAL SAFETY CODE.

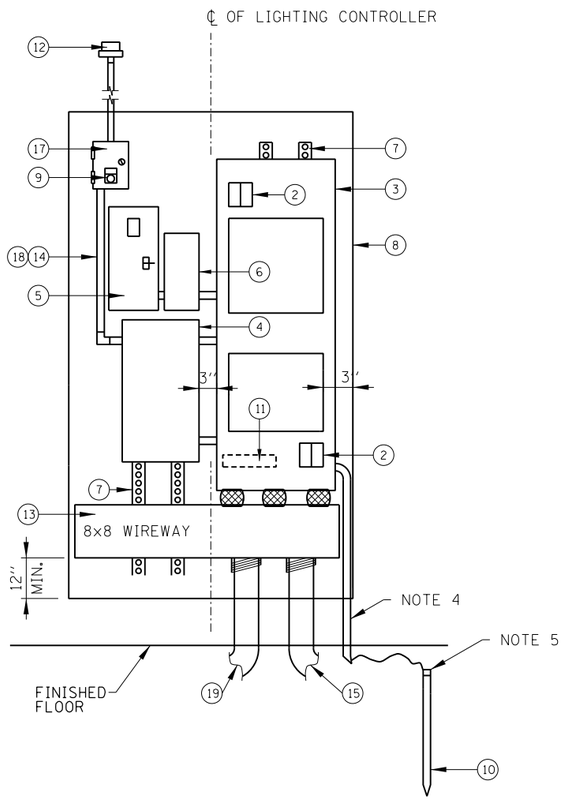

INTERIOR EQUIPMENT LAYOUT

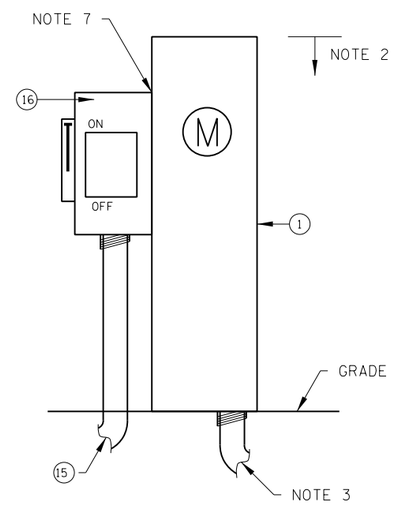

SERVICE ENTRANCE DETAIL

ITEM	DESCRIPTION
1	METER HOUSING, MILBANK U8436-O.
2	SECONDARY SURGE ARRESTERS, 2 POLE, 650 VOLT. (JOSLYN Z2-650-O)
3	MAIN PANELBOARD, 480/240 VOLT, 1 PHASE, 3 WIRE, 2 SECTION, 200 AMP, 2 POLE MAIN CIRCUIT BREAKER 65,000 AMPERES SYMMETRICAL INTERRUPTING CAPACITY. EATON PANELBOARD TYPE POW-R-LINE 3a IN A NEMA 1 ENCLOSURE, WITH CIRCUIT BREAKERS PER SCHEDULE ON PLANS. DOOR HINGES ON RIGHT SIDE.
4	LIGHTING CONTACTOR, 480 VOLT, 200 AMP, 2 POLE, 120 VOLT CONTROL, WITH RELAY FOR 2 WIRE CONTROL, (MAGNECRAFT W389ACX-9) ONE NORMALLY OPEN AND ONE NORMALLY CLOSED AUXILIARY CONTACTS, CONTROL LINE FUSE, IN A NEMA 1 ENCLOSURE, SQUARE-D CLASS 8903, TYPE PB.
5	SECONDARY BREAKER, 15 AMPERE TRIP, 120 VOLT, SINGLE POLE, 65,000 AMPERES SYMMETRICAL INTERRUPTING CAPACITY IN A NEMA 1 SURFACE MOUNTED ENCLOSURE.
6	STEP DOWN TRANSFORMER, 1500 VA, 480 VOLT PRIMARY, 120 VOLT SECONDARY, SINGLE PHASE, 60 HERTZ, DRY TYPE, NEMA 3R ENCLOSURE. (JEFFERSON 411-0081-000)
7	1¼" X ¾" C-CHANNEL (UNISTRUT) FOR ALL EQUIPMENT STANDOFF
8	½" EQUIPMENT MOUNTING PANEL (4' W X 7' H)
9	HAND-OFF-AUTO SELECTOR SWITCH WITH LEGEND PLATE. MOUNTED IN THE COVER OF ITEM 17. (SQ D 9001KS43BH13)
10	ROUTED TO BUILDING GROUND SYSTEM. IF NO GROUND AVAILABLE CONTRACTOR SHALL PROVIDE ⅝" DIA. X 10'-0" LONG GROUND ROD WITHIN GROUND WELL.
11	GROUND BUS MOUNTED IN PANELBOARD ENCLOSURE.
12	PHOTO ELECTRIC CONTROL SWITCH, (TORK 2100 SERIES) MOUNTED ON SOUTH EXTERIOR SIDE OF BUILDING (VIEW UNOBSTRUCTED)
13	8"x8" WIREWAY WITH 3-3" NIPPLES.
14	INTERNAL CONTROL WIRING SHALL BE #12 AWG, STRANDED, INSULATED NEC TYPE THWN/THHN RATED 600 VOLT, WITH SUITABLE COLOR CODING TO BE APPROVED BY THE ENGINEER BEFORE CONSTRUCTION.
15	2" STAINLESS STEEL CONDUIT FROM SERVICE SAFETY SWITCH TO LIGHTING CONTROLLER WIREWAY.
16	SERVICE SAFETY SWITCH, 200 AMP, 600 VOLT, NON-FUSED, NEMA 4X STAINLESS STEEL ENCLOSURE.
17	NEMA TYPE 1, 8"x6"x4" JUNCTION BOX & COVER WITHOUT KNOCKOUTS. ITEM 9 IS MOUNTED IN THE COVER.
18	INTERNAL CONDUIT AND FITTINGS SHALL BE ¾" MINIMUM.
19	(2) 4" STAINLESS STEEL CONDUIT TO LIGHTING CONTROLLER HANDHOLE. REFER TO SITE PLAN FOR LOCATION.

Illinois Tollway

DATE	REVISIONS
3-31-2016	REVISED NOTE 2.

INTERIOR CONTROL CONSOLE DETAILS

STANDARD H8-01

APPROVED Paul Kovacs CHIEF ENGINEER DATE 2-7-2012

CONTROL CONSOLE DETAILS (INTERIOR INSTALLATION)

NOTES:

1. TO UTILITY SERVICE. 480/240V, 1 PHASE, 3 WIRE, GROUNDED, WHEN A METER HOUSING IS REQUIRED (FED FROM PAD MOUNTED UTILITY TRANSFORMER WITHIN ILLINOIS TOLLWAY RIGHT-OF-WAY).
2. TO SERVICE PEDESTAL, 480/240V, 1 PHASE, 3 WIRE, GROUNDED. SEE STANDARD H5.
3. ITEM NUMBERS REFER TO EQUIPMENT LIST ON SHEET 1 OF THIS SERIES.
4. PROVIDE CIRCUIT BREAKERS PER SCHEDULE ON THE CONTRACT PLANS (MINIMUM OF 12).
5. FOR INTERIOR EQUIPMENT LAYOUT SEE SHEET 1 OF THIS SERIES.
6. ALL EQUIPMENT SHALL BE GROUNDED AND BONDED IN ACCORDANCE WITH THE NATIONAL ELECTRICAL CODE AND THE NATIONAL ELECTRICAL SAFETY CODE.
7. CONDUIT AND CABLE BETWEEN METER FITTING AND DISCONNECT SWITCH ROUTED BETWEEN CONTROL CONSOLE AND CONCRETE FOUNDATION, WHEN A METER HOUSING IS REQUIRED. CONDUIT AND CABLE SHALL BE THE SAME AS THE SERVICE.

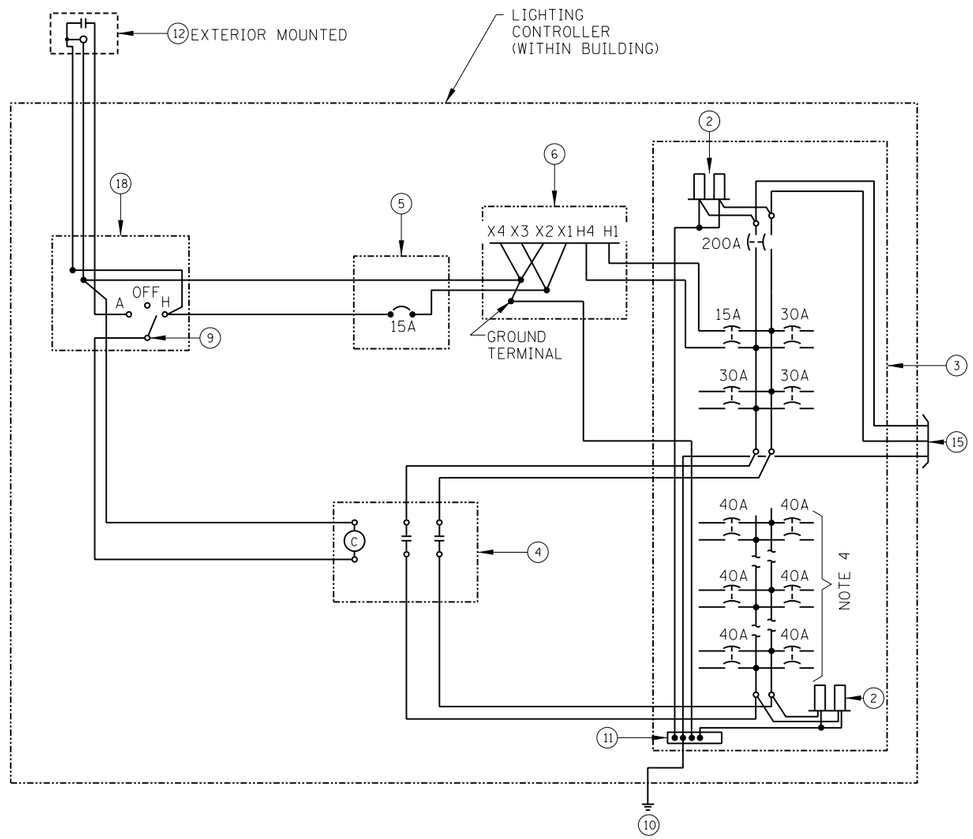

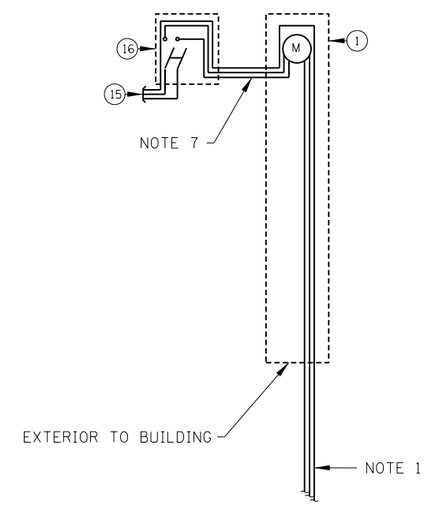

CONTROL CONSOLE WIRING DIAGRAM

SHEET 2 OF 2

Illinois Tollway

INTERIOR CONTROL CONSOLE DETAILS

STANDARD H8-01

CONTROL CONSOLE DETAILS (INTERIOR INSTALLATION)

Paul Kovacs
APPROVED ..... CHIEF ENGINEER
DATE 2-7-2012

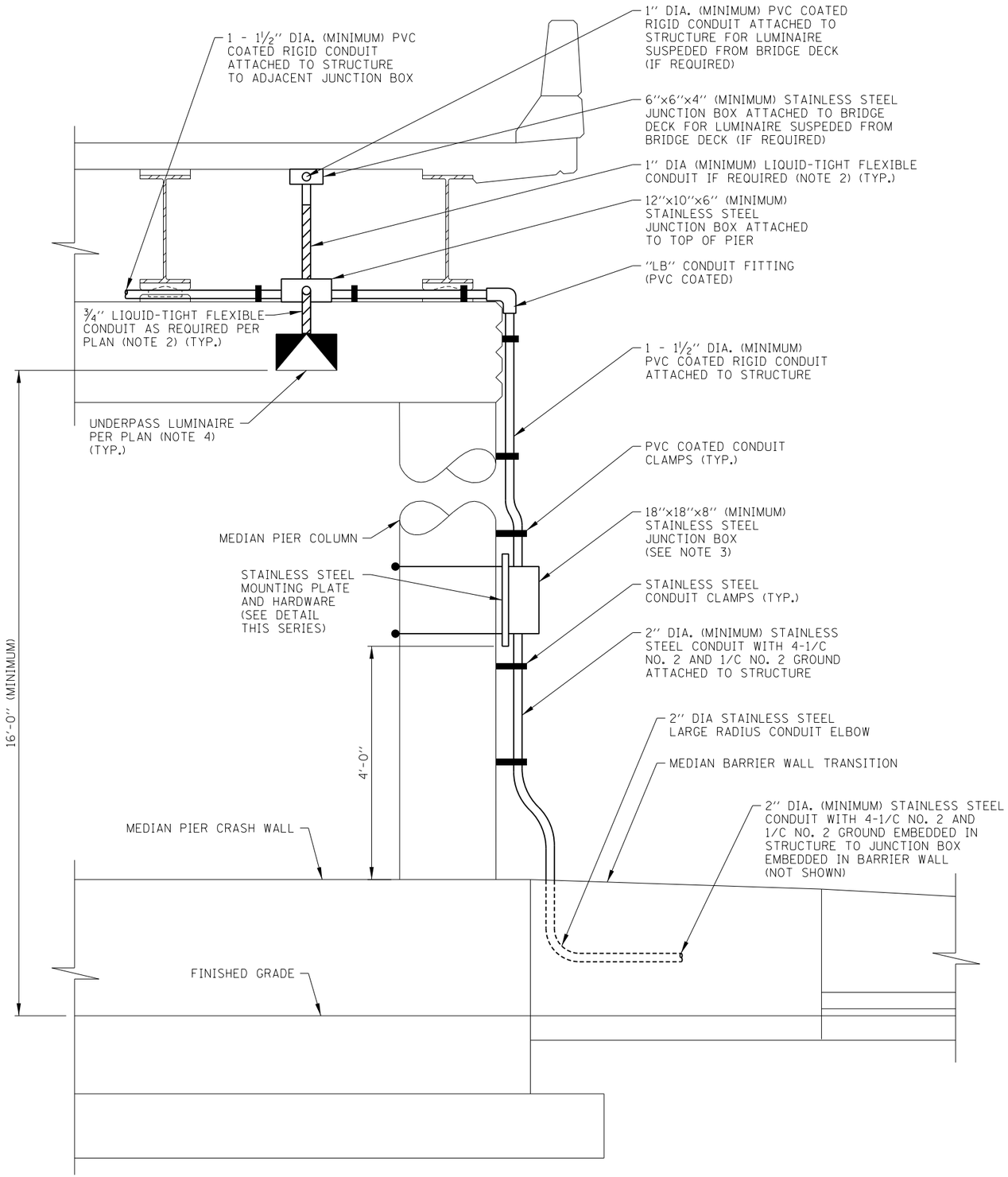

NOTES:

1. USE OF THIS STANDARD DETAIL IS LIMITED TO THE INSTALLATION OF LIGHT EMITTING DIODE LUMINAIRES ONLY. FOR INSTALLATION OF OTHER LIGHT SOURCE TYPES, REFER TO PLAN DETAILS.

2. LIQUID-TIGHT FLEXIBLE CONDUIT, MAXIMUM LENGTH 6'-0", TYPICAL FOR EACH INSTANCE AS SHOWN. PROVIDE SUFFICIENT LENGTH OF PVC COATED RIGID GALVANIZED STEEL CONDUIT AS REQUIRED CONDUIT AS REQUIRED SO THE MAXIMUM LENGTH OF REQUIRED LIQUID-TIGHT DOES NOT EXCEED 6'-0". LIQUID-TIGHT FLEXIBLE CONDUIT. LIQUID-TIGHT FLEXIBLE CONDUIT SHALL BE INCIDENTAL TO THE COST OF THE UNDERPASS LUMINAIRE IT CONNECTS. NO SEPARATE PAYMENT WILL BE MADE.

3. PROVIDE TWO (2) 2-POLE 30A, 600 VOLT CIRCUIT BREAKERS (EATON HFD OR APPROVED EQUAL), TWO (2) SURGE PROTECTION DEVICES (IN ACCORDANCE WITH ARTICLE 1065.02 OF THE STANDARD SPECIFICATIONS) AND SUFFICIENT 30 AMPERE, 600 VOLT TERMINAL BLOCKS TO SPLIT 480 VOLT WIRING FROM CIRCUIT BREAKER TO TWO (2) NO. 10 WIRES FOR EACH LUMINAIRE. THIS WORK SHALL BE INCIDENTAL TO THE COST OF THE JUNCTION BOX. NO SEPARATE PAYMENT WILL BE MADE.

4. WIRING SHALL BE 2-1/C NO. 10 WITH 1/C NO. 10 GROUND OR AS INDICATED ON THE PLANS TERMINATING AT EACH LUMINAIRE. SEE PLANS FOR REMAINING WIRING REQUIREMENTS.

5. THE CONTRACTOR SHALL PROVIDE EXPANSION/DEFLECTION FITTINGS (O-Z/GEDNEY TYPE AXDX) WHERE CONDUITS CROSS STRUCTURE EXPANSION JOINTS. THE COST OF THIS WORK SHALL BE INCIDENTAL TO THE COST OF THE CONDUIT ATTACHED TO STRUCTURE. NO SEPARATE PAYMENT WILL BE MADE.

6. IN NEW BRIDGE DECKS, PROVIDE STAINLESS STEEL SINGLE COIL, FLARED LOOP INSERTS CAST IN THE DECK FOR ¾" DIAMETER STAINLESS STEEL THREADED RODS. IN EXISTING BRIDGE DECKS, PROVIDE DRILLED STAINLESS STEEL EXPANSION TYPE ANCHORS FOR ¾" DIAMETER STAINLESS STEEL THREADED RODS. EXPANSION TYPE ANCHORS SHALL HAVE A MINIMUM OF 500 POUNDS CAPACITY EACH.

7. THE HANGER ASSEMBLY COMPLETE WITH ANCHORS/INSERTS AND ALL APPLICABLE HARDWARE SHALL BE INCIDENTAL TO THE COST OF THE UNDERPASS LUMINAIRE. NO SEPARATE PAYMENT WILL BE MADE.

8. ALL ITEMS MOUNTED TO BRIDGE PIER SHALL BE OFFSET FROM THE STRUCTURE A MINIMUM OF ONE (1) INCH BY USE OF STAINLESS STEEL C-CHANNEL.

9. WHERE BEAM DEPTH EXCEEDS FIVE (5) FEET, THE DESIGNER SHALL PROVIDE A METHOD FOR ATTACHMENT OF THE HANGER ASSEMBLIES SUCH THAT THE LENGTH OF THE ASSEMBLIES DO NOT EXCEED FIVE (5) FEET.

10. DETAILS SHOWN ARE FOR UNDERPASS LIGHTING INSTALLATIONS FED FROM THE MEDIAN BARRIER WALL. FOR INSTALLATIONS FED FROM A BRIDGE ABUTMENT, REFER TO THE PLAN DETAILS.

11. UNDERPASS LUMINAIRES SUSPENDED FROM BRIDGE DECK SHALL BE INSTALLED CENTERED BETWEEN THE BRIDGE BEAMS. THE LUMINAIRE SHALL BE LOCATED SUCH THAT IT IS SETBACK A MINIMUM OF 1 FOOT FROM THE OUTSIDE EDGE OF THE SHOULDER PAVEMENT WITH THE TOP OF THE LUMINAIRE MOUNTING PLATE A MAXIMUM OF 1 INCH FROM THE BOTTOM OF THE BRIDGE BEAM. IN NO CASE SHALL ANY PORTION OF THE SUSPENDED LUMINAIRE OR SUPPORTING HARDWARE BE LOWER THAN 14'-6" WHEN MEASURED TO THE OUTSIDE EDGE OF THE ADJACENT SHOULDER PAVEMENT.

12. IN NO INSTANCE SHALL ANY UNDERPASS LUMINAIRE OR ANY OTHER ELECTRICAL EQUIPMENT BE INSTALLED BELOW THE ELEVATION OF THE BOTTOM OF THE BRIDGE BEAM WHEN OVER ANY PAVEMENT (ROADWAY OR SHOULDER) WITH EXCEPTION OF THOSE MOUNTED TO THE MEDIAN PIER AT WHICH CASE THE MINIMUM HEIGHT SHALL BE 16'-0" WHEN MEASURED TO THE LOWEST PORTION OF THE LUMINAIRE OR SUPPORTING HARDWARE.

13. LUMINAIRE MOUNTING PLATE FOR LUMINAIRES SUPENDED FROM BRIDGE DECK SHALL BE OF THE DIMENSIONS NECESSARY AND FIELD DRILLED TO ACCOMODATE THE SPECIFIC LUMINAIRE PROVIDED AND ASSOCIATE LUMINAIRE HANGER ASSEMBLIES.

14. SEE PLANS FOR UNDERPASS LUMINAIRE LOCATIONS AND MOUNTING HEIGHTS.

15. SEE STRUCTURAL DRAWINGS FOR SPECIFIC STRUCTURE DETAILS.

16. ALL EQUIPMENT SHALL BE GROUNDED AND BONDED IN ACCORDANCE WITH THE NATIONAL ELECTRICAL CODE AND THE NATIONAL ELECTRICAL SAFETY CODE.

UNDERPASS LIGHTING
(MEDIAN PIER MOUNTED LUMINAIRE & FEEDER INSTALLATION)

Paul Kovacs
APPROVED ..... CHIEF ENGINEER
DATE 3-31-2016

DATE	REVISIONS

Illinois Tollway

UNDERPASS LIGHTING INSTALLATION DETAILS

STANDARD H9-00

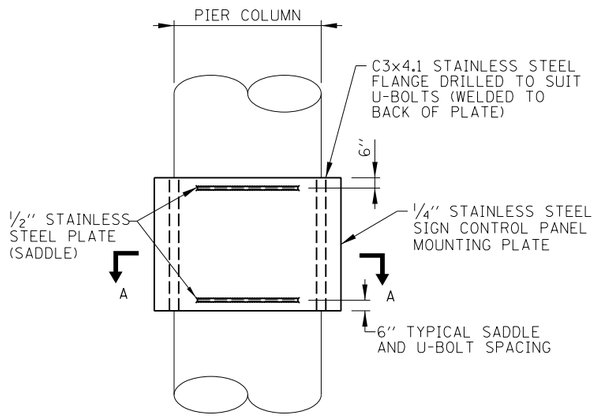

ELEVATION

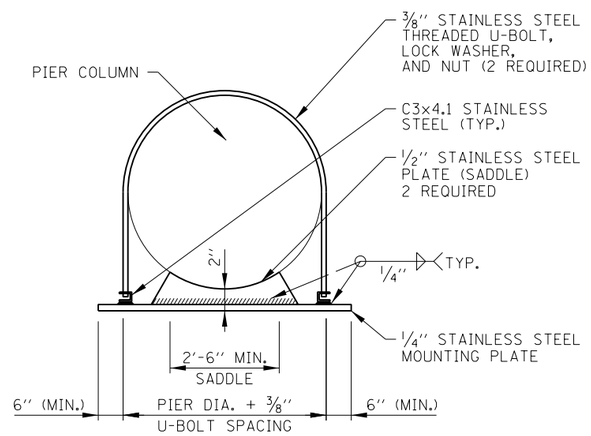

SECTION A-A

MEDIAN PIER JUNCTION BOX MOUNTING PLATE DETAIL

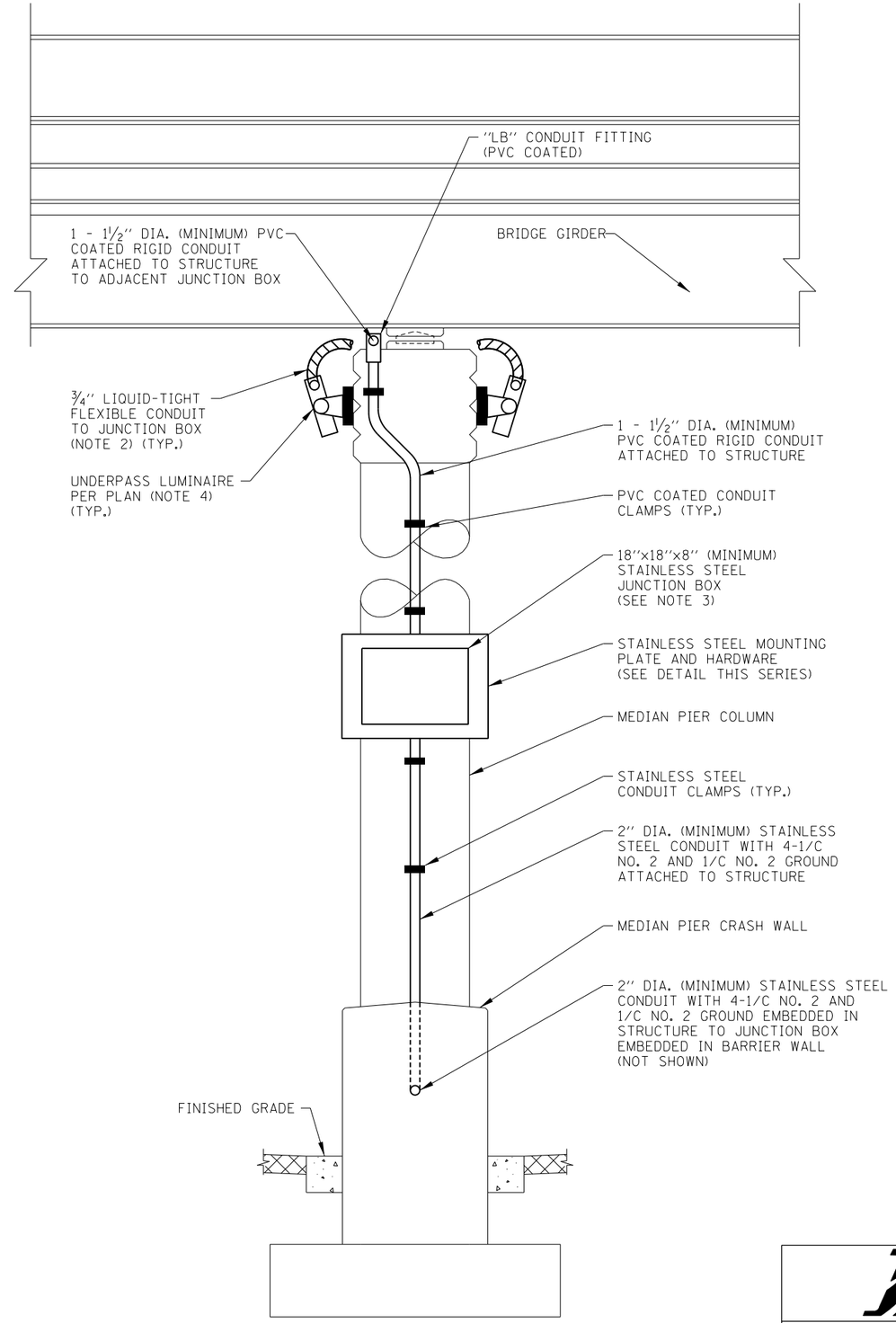

SHEET 2 OF 3

Illinois Tollway

UNDERPASS LIGHTING INSTALLATION DETAILS

STANDARD H9-00

Paul Kovacs
APPROVED CHIEF ENGINEER DATE 3-31-2016

UNDERPASS LIGHTING
(MEDIAN PIER MOUNTED LUMINAIRE & FEEDER INSTALLATION)

NOTE:
FOR NOTES SEE SHEET 1 OF THIS SERIES.

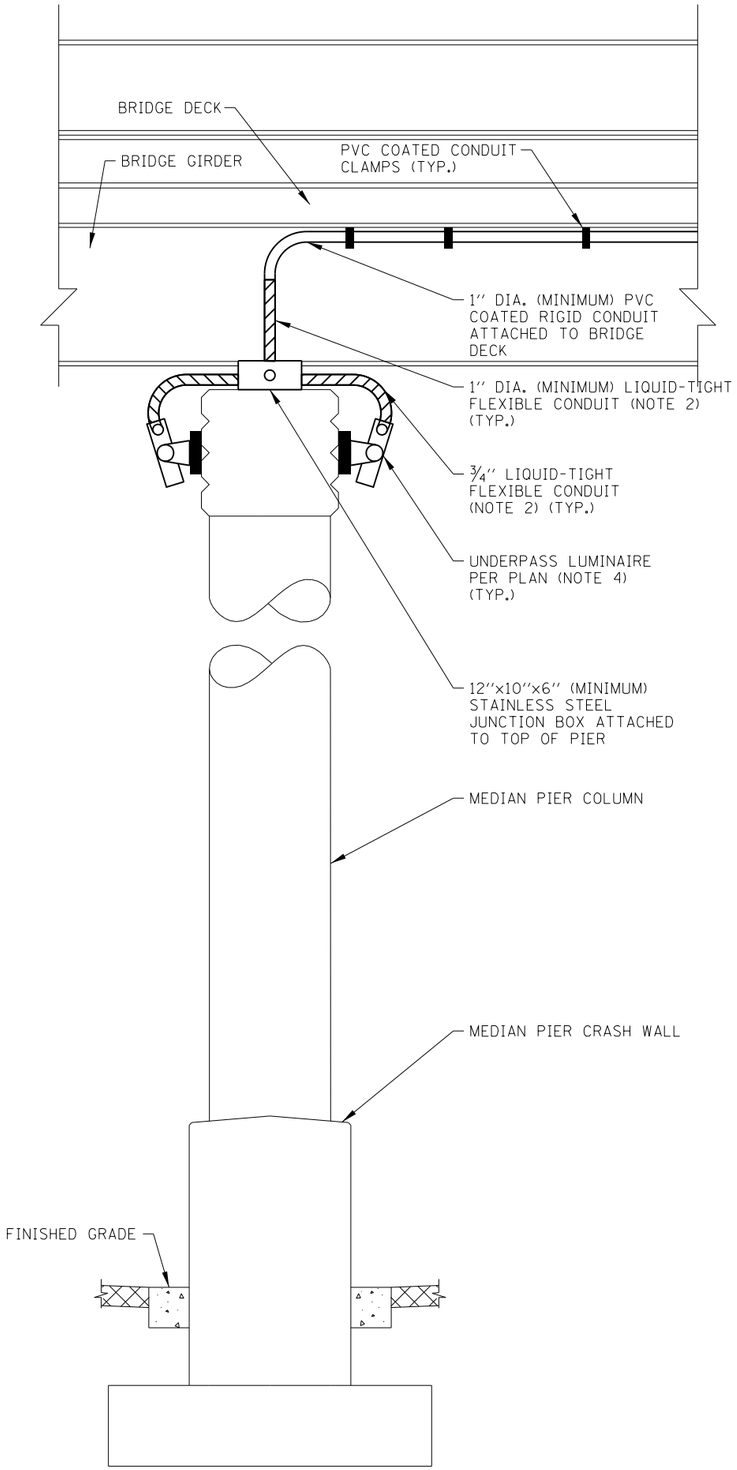

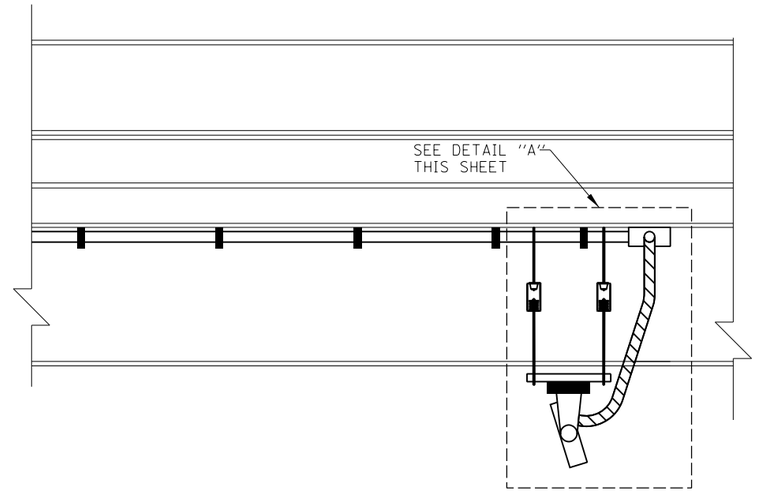

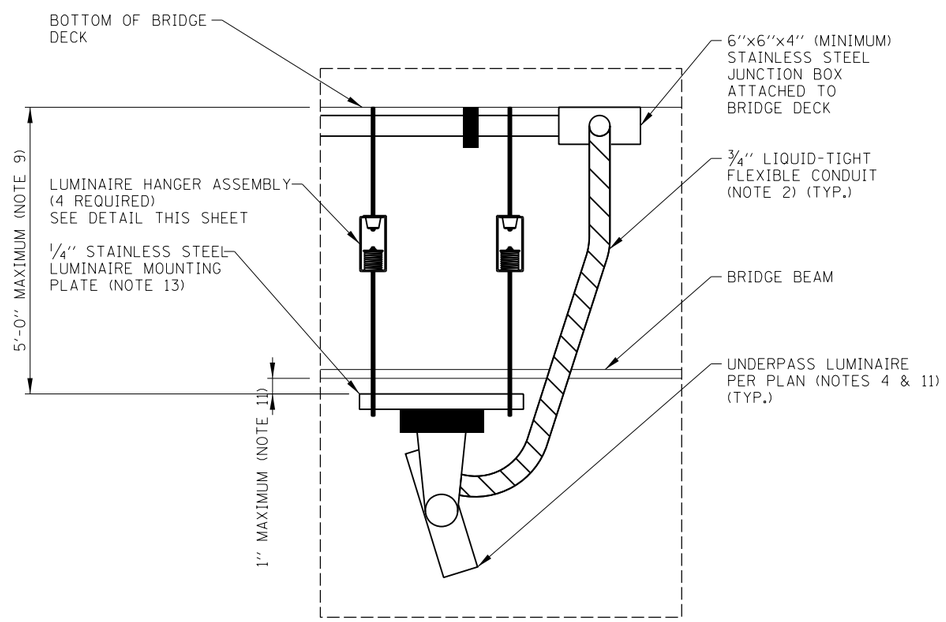

DETAIL A

CONDUIT CLAMP DETAIL

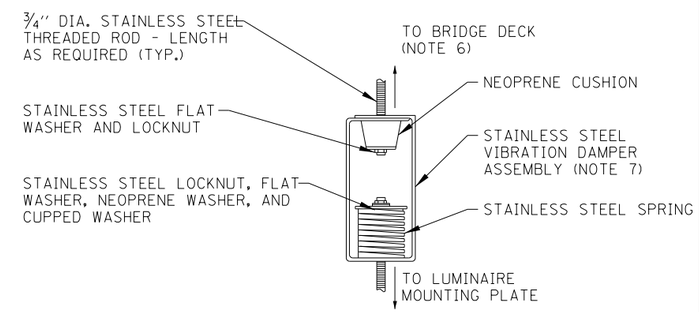

LUMINAIRE HANGER ASSEMBLY DETAIL

SHEET 3 OF 3

Illinois Tollway

UNDERPASS LIGHTING INSTALLATION DETAILS

STANDARD H9-00

Paul Kovacs
APPROVED ..... CHIEF ENGINEER DATE 3-31-2016

UNDERPASS LIGHTING
(BRIDGE DECK SUSPENDED LUMINAIRE & MISCELLANEOUS DETAILS)

NOTE:
FOR NOTES SEE SHEET 1 OF THIS SERIES.

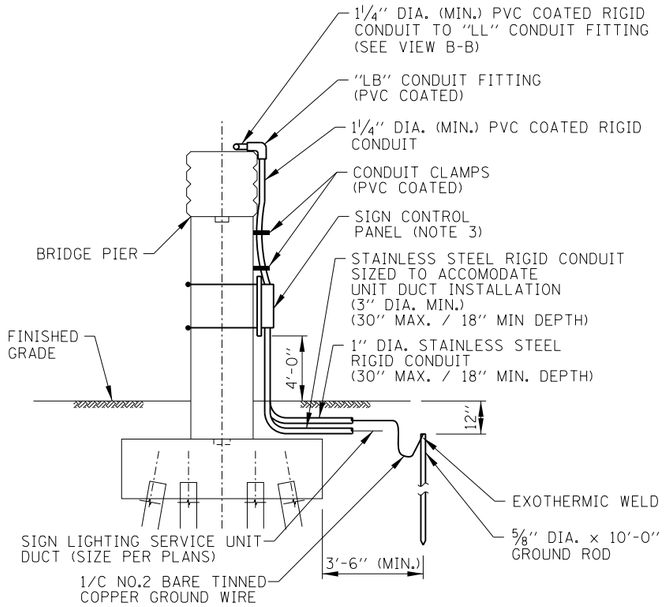

SECTION A-A

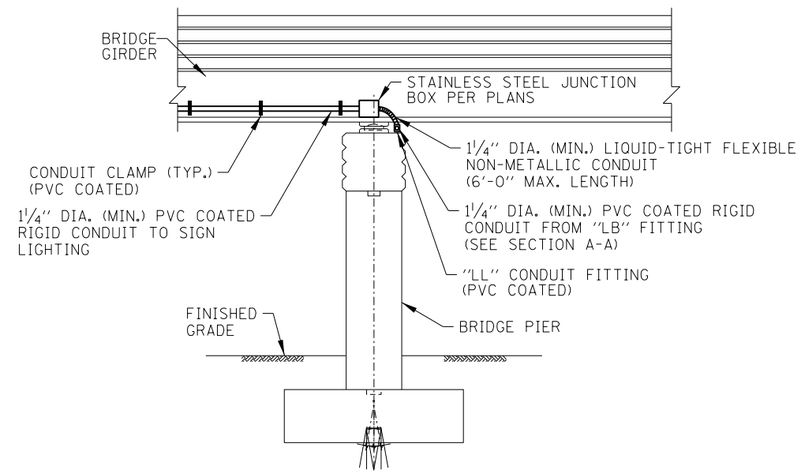

SECTION B-B

NOTES:

1. FOR SIGN STRUCTURE INSTALLATION DETAILS SEE SHEET 3 OF 3 IN THIS SERIES.
2. FOR SIGN LUMINAIRE INSTALLATION AND WIRING AND FOR INSTALLATION OF CONDUIT IN FIXTURE SUPPORT CHANNEL, SEE STANDARD H14.
3. FOR TYPICAL SIGN CONTROL PANEL DETAILS SEE SHEET 2 OF 3 IN THIS SERIES.
4. DETAILS SHOWN ON THIS SHEET ARE WITHOUT FLASHING BEACON. INSTALLATION OF FLASHING BEACON REQUIRES ADDITIONAL WORK AS SHOWN ON TYPICAL SIGN CONTROL PANEL DETAIL (SHEET 2 OF 3 IN THIS SERIES).
5. LUMINAIRE SUPPORT MEMBERS TO BE INSTALLED ONLY WHEN THE SIGN IS TO BE ILLUMINATED. MAINLINE TOLL PLAZA APPROACH SIGNS SHALL BE ILLUMINATED. DESIGNER TO DETERMINE REQUIREMENTS FOR LIGHTING ALL OTHER SIGNS BASED ON ROADWAY GEOMETRY.
6. PROVIDE 12'' FLASHING BEACON ONLY WHERE INDICATED ON PLANS. FLASHING BEACON TO BE ATTACHED TO SUPPORT WITH STAINLESS STEEL SCREWS AND NEOPORENE SPACERS. DRILLED SCREW HOLES TO BE SEALED WATER-TIGHT.
7. SEE STRUCTURAL DRAWINGS FOR DETAILS OF SIGN SUPPORTS AND FIXTURE SUPPORT CHANNELS.
8. CONDUITS, CONDUIT FITTINGS, CLAMPS, AND APPURTENANCES ATTACHED TO ALUMINUM STRUCTURAL SUPPORTS SHALL BE PVC COATED ALUMINUM. PVC COATED GALVANIZED STEEL CONDUITS, CONDUIT FITTINGS, CLAMPS, AND APPURTENANCES SHALL BE UTILIZED WHERE ATTACHED TO STEEL STRUCTURAL SUPPORTS OR WHERE ATTACHED TO CONCRETE STRUCTURES UNLESS NOTED OTHERWISE HEREIN. THREADED JOINTS BETWEEN DISSIMILAR METALS SHALL BE COATED WITH AN APPROVED THREAD LUBRICANT.
9. ALL EQUIPMENT SHALL BE GROUNDED AND BONDED IN ACCORDANCE WITH THE NATIONAL ELECTRICAL CODE AND THE NATIONAL ELECTRICAL SAFETY CODE.

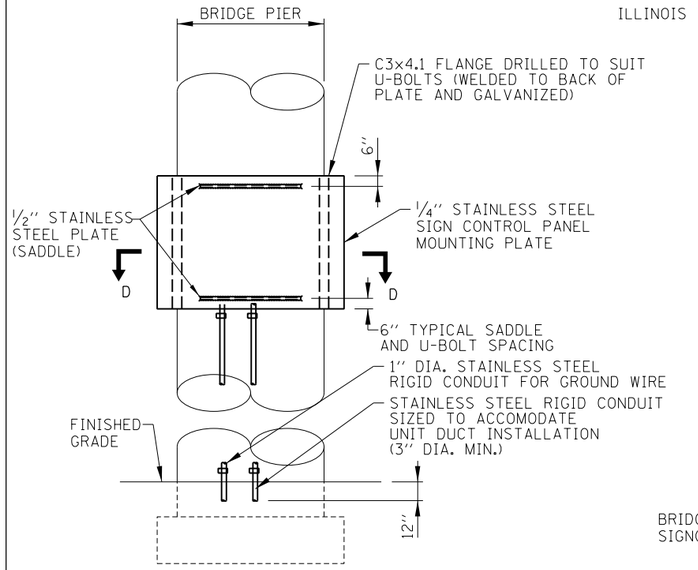

VIEW C-C

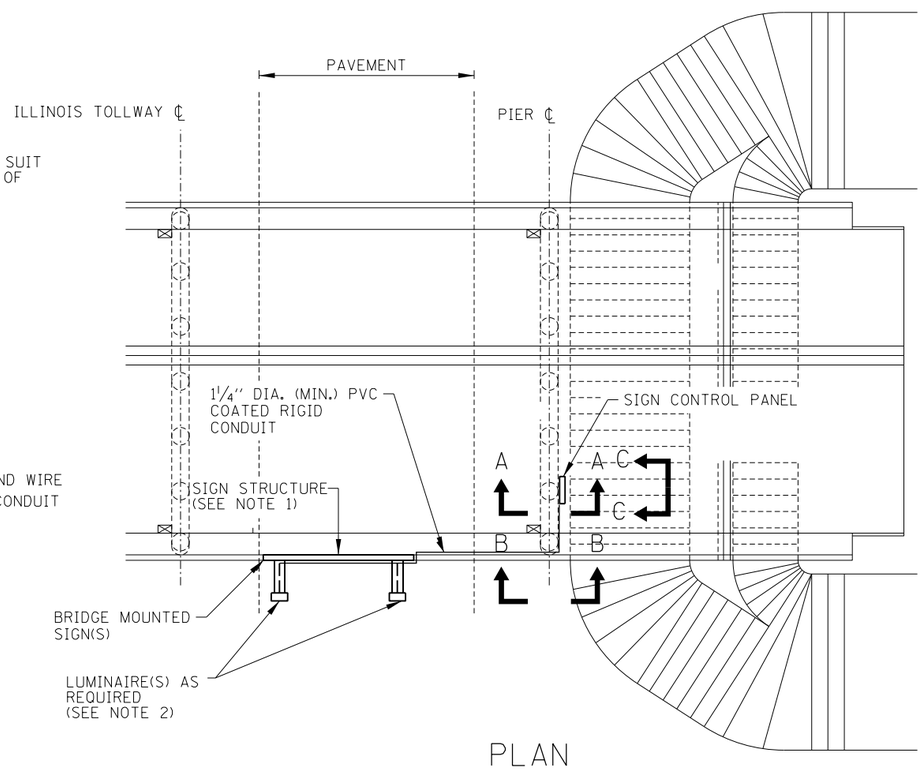

PLAN

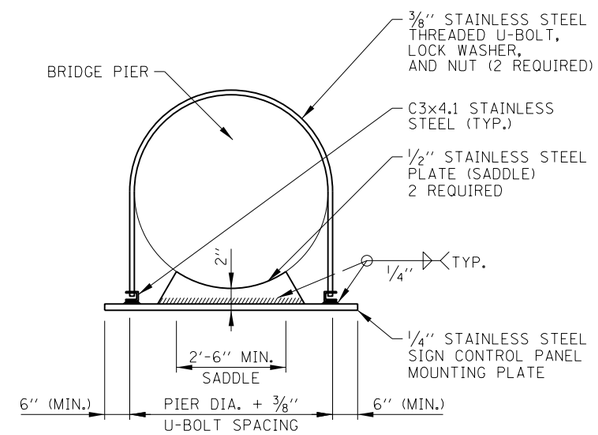

SECTION D-D

BRIDGE MOUNTED SIGN LIGHTING
(BRIDGE PIER MOUNTED FEEDER INSTALLATION)

Paul Kovacs
APPROVED ..... CHIEF ENGINEER
DATE 2-7-2012

DATE	REVISIONS
2-07-2012	ADDED CONTROL PANEL MOUNTING DETAILS
	REVISED NOTES, REMOVED CANISTOR BALLASTS,
	NEW JUNCTION BOX, AND REVISED CONDUCTOR
	DESIGNATION.
3-11-2015	REVISED CONDUITS TO STAINLESS STEEL.

SHEET 1 OF 3

Illinois Tollway

BRIDGE MOUNT SIGN LIGHTING DETAILS

STANDARD H10-02

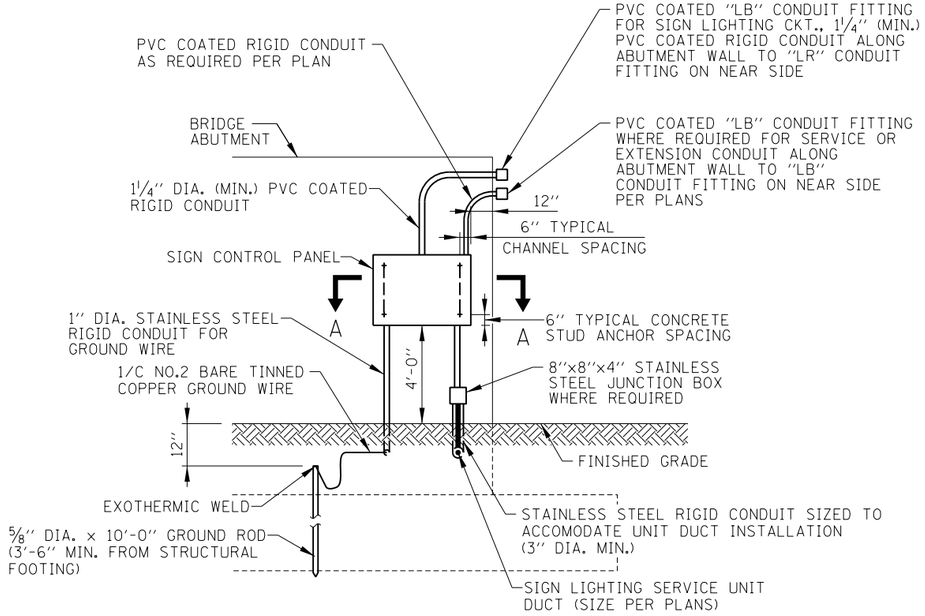

FAR SIDE ABUTMENT END ELEVATION

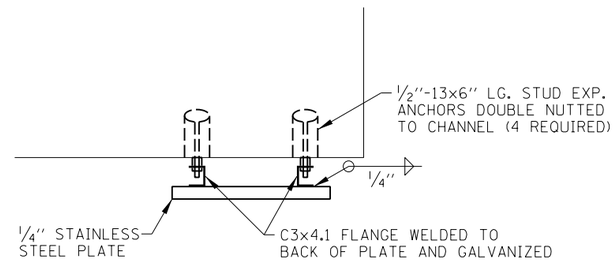

SECTION A-A

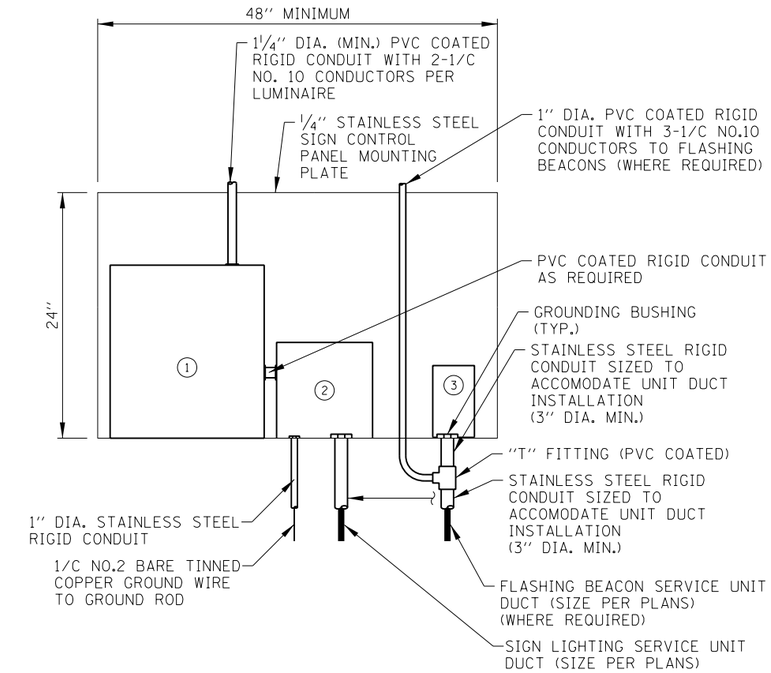

LEGEND:

1. 18"x18"x8" STAINLESS STEEL JUNCTION BOX. PROVIDE SUFFICIENT 30 AMPERE, 600 VOLT TERMINAL BLOCKS TO SPLIT 480 VOLT WIRING FROM SIGN SERVICE CIRCUIT BREAKER TO TWO NO. 10 WIRES FOR EACH LUMINAIRE.
2. SIGN LIGHTING SERVICE - CIRCUIT BREAKER (30 AMP/2 POLE) IN NEMA TYPE 4 C.I. ENCLOSURE, OZ TYPE "YW" WITH MOUNTING FEET OR APPROVED EQUAL.
3. FLASHING BEACON CONTROLLER.

TYPICAL SIGN CONTROL PANEL DETAIL

(FOR TYPICAL WIRING DIAGRAM SEE STANDARD H14)

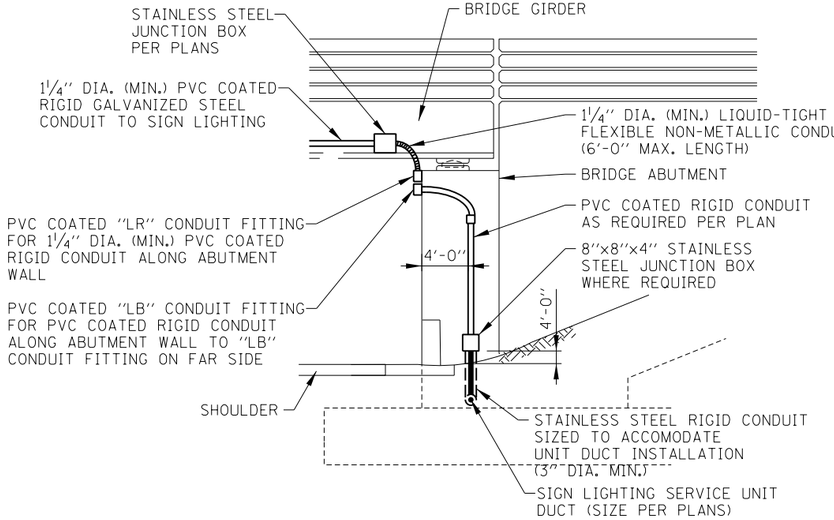

NEAR SIDE ABUTMENT END ELEVATION

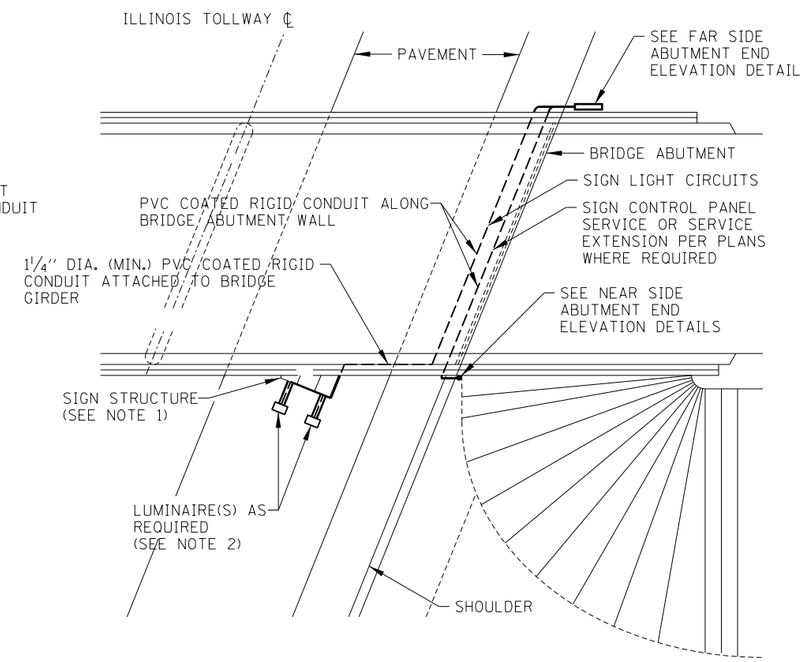

PLAN

SHEET 2 OF 3

Illinois Tollway

BRIDGE MOUNT SIGN LIGHTING DETAILS

STANDARD H10-02

BRIDGE MOUNTED SIGN LIGHTING
(BRIDGE ABUTMENT MOUNTED FEEDER INSTALLATION)

NOTES:

SEE SHEET 1 OF THIS SERIES FOR NOTES.

Paul Kovacs
APPROVED ..... CHIEF ENGINEER
DATE 2-7-2012

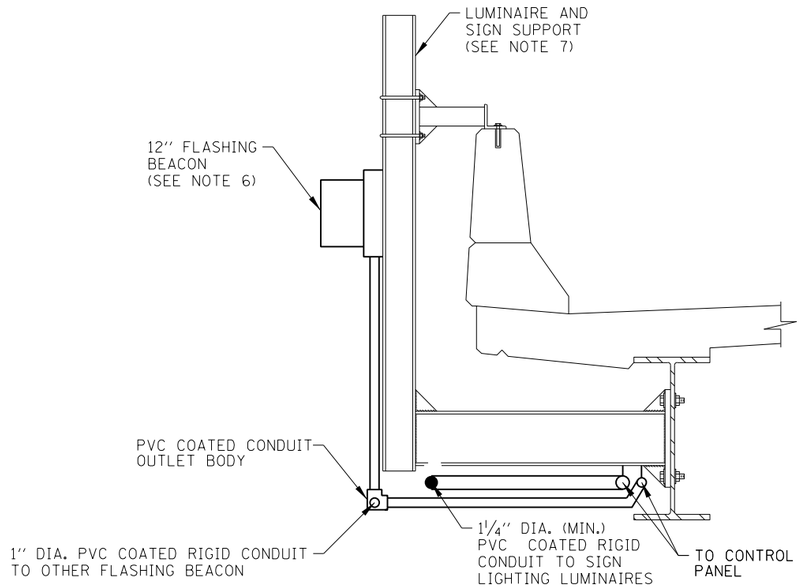

SECTION A-A

(STEEL BRIDGE SHOWN)

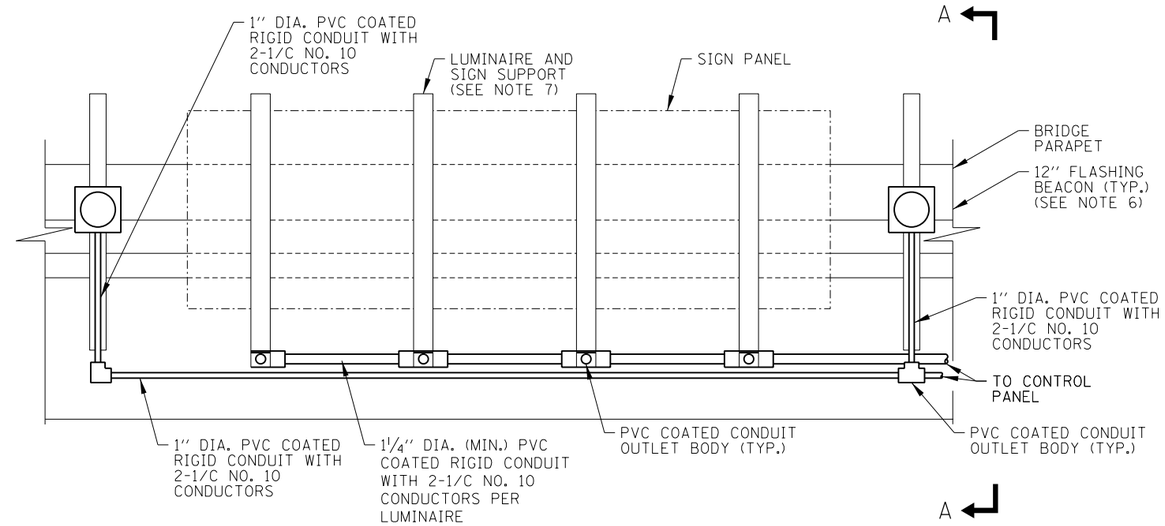

TYPICAL FRONT ELEVATION WITH FLASHING BEACON

(LUMINAIRES NOT SHOWN FOR CLARITY)

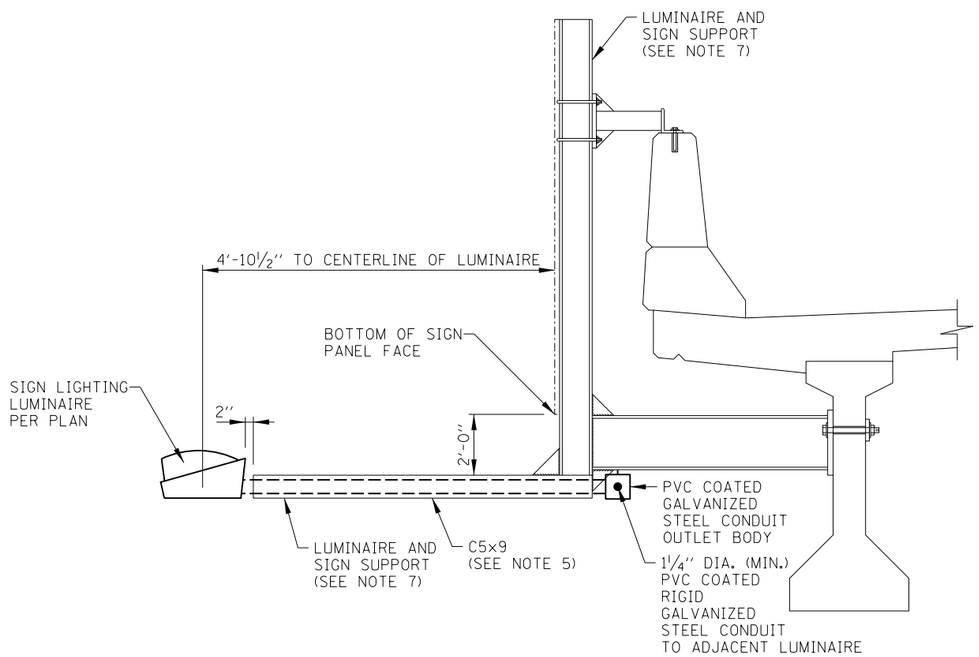

SECTION B-B

(CONCRETE BRIDGE SHOWN)

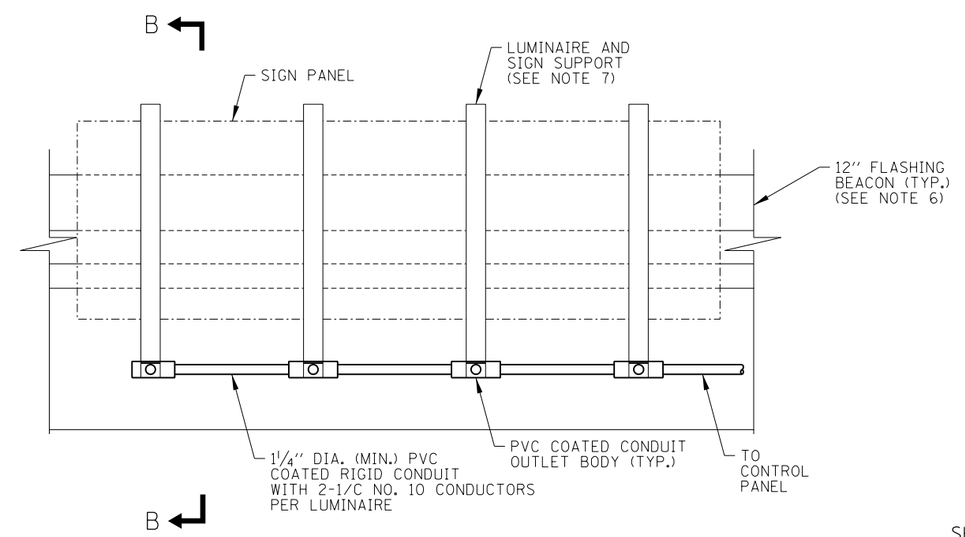

TYPICAL FRONT ELEVATION WITHOUT FLASHING BEACON

(LUMINAIRES NOT SHOWN FOR CLARITY)

BRIDGE MOUNTED SIGN LIGHTING (LUMINAIRE MOUNTING & CONDUIT DETAILS)

NOTES:

SEE SHEET 1 OF THIS SERIES FOR NOTES.

Paul Kovacs
APPROVED ..... CHIEF ENGINEER
DATE 2-7-2012

SHEET 3 OF 3

Illinois Tollway

BRIDGE MOUNT SIGN
LIGHTING DETAILS

STANDARD H10-02

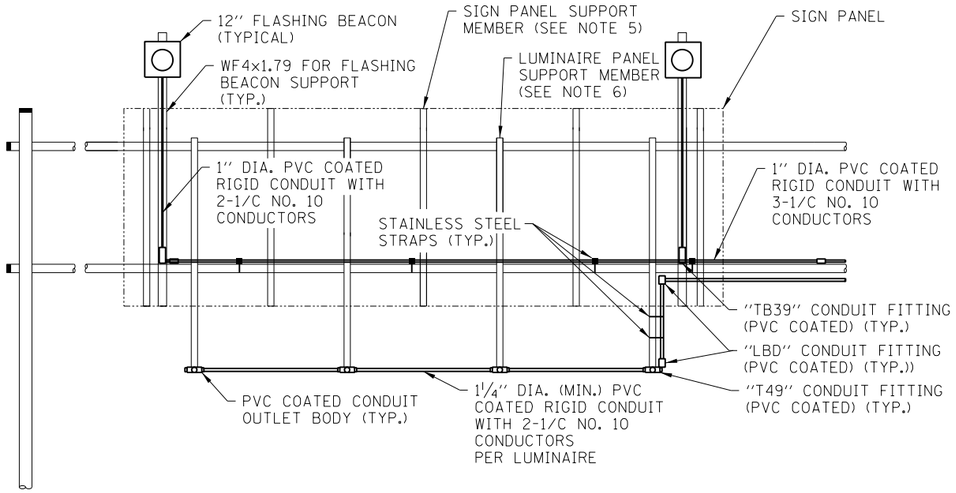

FRONT ELEVATION WITH FLASHING BEACON

(LUMINAIRES NOT SHOWN FOR CLARITY)

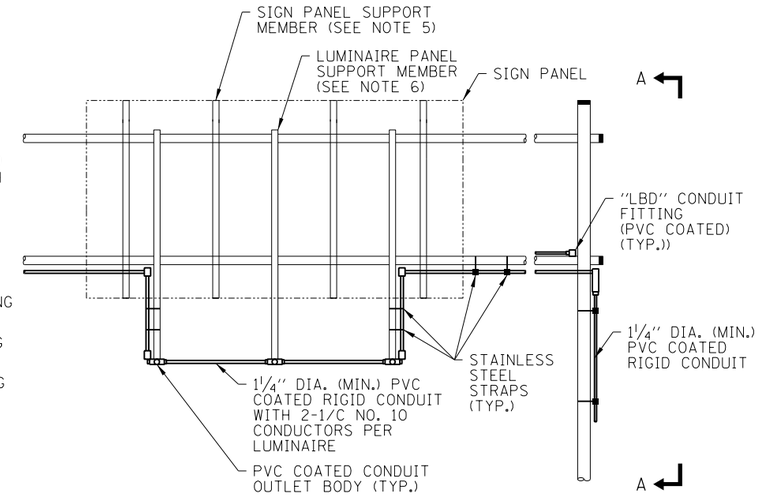

FRONT ELEVATION WITHOUT FLASHING BEACON

(LUMINAIRES NOT SHOWN FOR CLARITY)

NOTES:

1. CONDUITS, CONDUIT FITTINGS, CLAMPS, AND APPURTENANCES ATTACHED TO ALUMINUM STRUCTURAL SUPPORTS SHALL BE PVC COATED ALUMINUM. PVC COATED GALVANIZED STEEL CONDUITS, CONDUIT FITTINGS, CLAMPS, AND APPURTENANCES SHALL BE UTILIZED WHERE ATTACHED TO STEEL STRUCTURAL SUPPORTS OR WHERE ATTACHED TO CONCRETE STRUCTURES UNLESS NOTED OTHERWISE HEREIN. THREADED JOINTS BETWEEN DISSIMILAR METALS SHALL BE COATED WITH AN APPROVED THREAD LUBRICANT.
2. PROVIDE 12" FLASHING BEACON ONLY WHERE INDICATED ON PLANS. FLASHING BEACON TO BE ATTACHED TO SUPPORT WITH STAINLESS STEEL SCREWS AND NEOPRENE SPACERS. DRILLED SCREW HOLES TO BE SEALED WATER-TIGHT.
3. ALL EQUIPMENT SHALL BE GROUNDED AND BONDED IN ACCORDANCE WITH THE NATIONAL ELECTRICAL CODE AND THE NATIONAL ELECTRICAL SAFETY CODE.
4. ALL STEEL TO BE HOT DIPPED GALVANIZED AFTER WELDING PER ILLINOIS TOLLWAY SUPPLEMENTAL SPECIFICATION SECTION 733.
5. SEE STRUCTURAL DRAWINGS FOR DETAILS OF SIGN SUPPORTS AND FIXTURE SUPPORT CHANNELS.
6. LUMINAIRE SUPPORT MEMBERS TO BE INSTALLED ONLY WHEN STRUCTURE IS TO BE ILLUMINATED. MAINLINE PLAZA APPROACH SIGNS SHALL BE ILLUMINATED.
7. FOR SIGN LUMINAIRE INSTALLATION AND WIRING AND FOR INSTALLATION OF CONDUIT IN FIXTURE SUPPORT CHANNEL, SEE STANDARD H14.

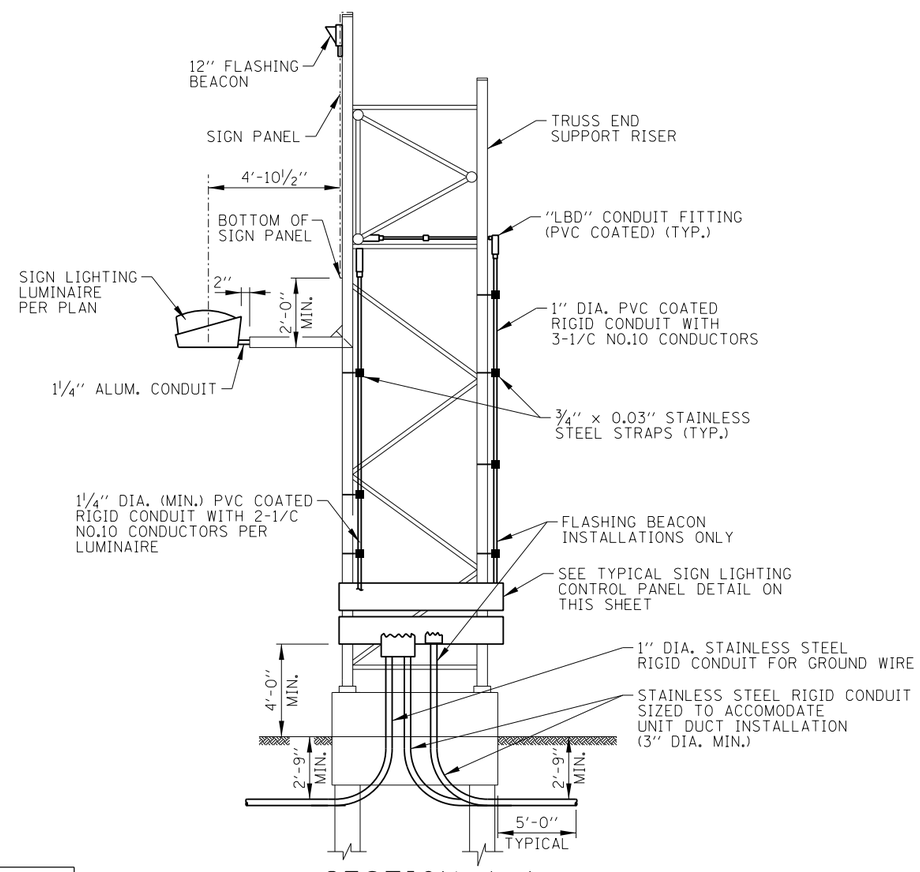

SECTION A-A

FULL ELEVATION (OUTSIDE FOUNDATION)

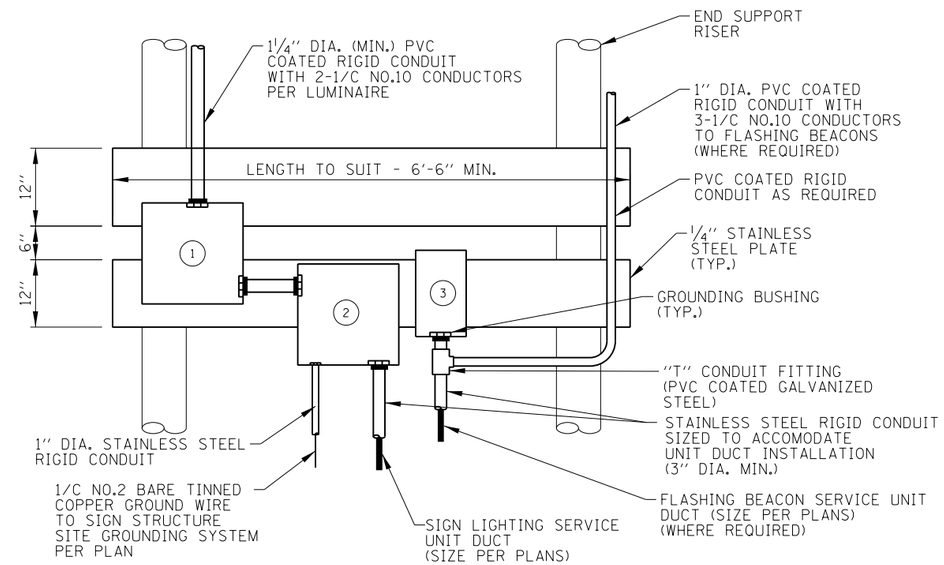

LEGEND:

1. 18"x18"x8" STAINLESS STEEL JUNCTION BOX. PROVIDE SUFFICIENT 30 AMPERE, 600 VOLT TERMINAL BLOCKS TO SPLIT 480 VOLT WIRING FROM SIGN SERVICE CIRCUIT BREAKER TO TWO NO. 10 WIRES FOREACH LUMINAIRE.
2. SIGN LIGHTING SERVICE - CIRCUIT BREAKER (30 AMP/2 POLE) IN NEMA TYPE 4 C.I. ENCLOSURE, OZ TYPE "YW" WITH MOUNTING FEET OR APPROVED EQUAL.
3. FLASHING BEACON CONTROLLER.

TYPICAL SIGN LIGHTING CONTROL PANEL

(FOR TYPICAL WIRING DIAGRAM SEE STANDARD H14)

Illinois Tollway

DATE	REVISIONS
02-07-12	ADDED SIGN PANEL SUPPORT MEMBER
	REVISED NOTES, BANNER SIGN REMOVED.
	BEACONS RELOCATED, REMOVED CANISTAR
	BALLASTS AND ADDED JUNCTION BOX.
03-31-14	REVISED FOUNDATION.
3-11-2015	REVISED CONDUIT MATERIALS

SPAN TYPE STRUCTURE SIGN LIGHTING DETAILS

STANDARD H11-03

Paul Kovacs
APPROVED CHIEF ENGINEER DATE 2-7-2012

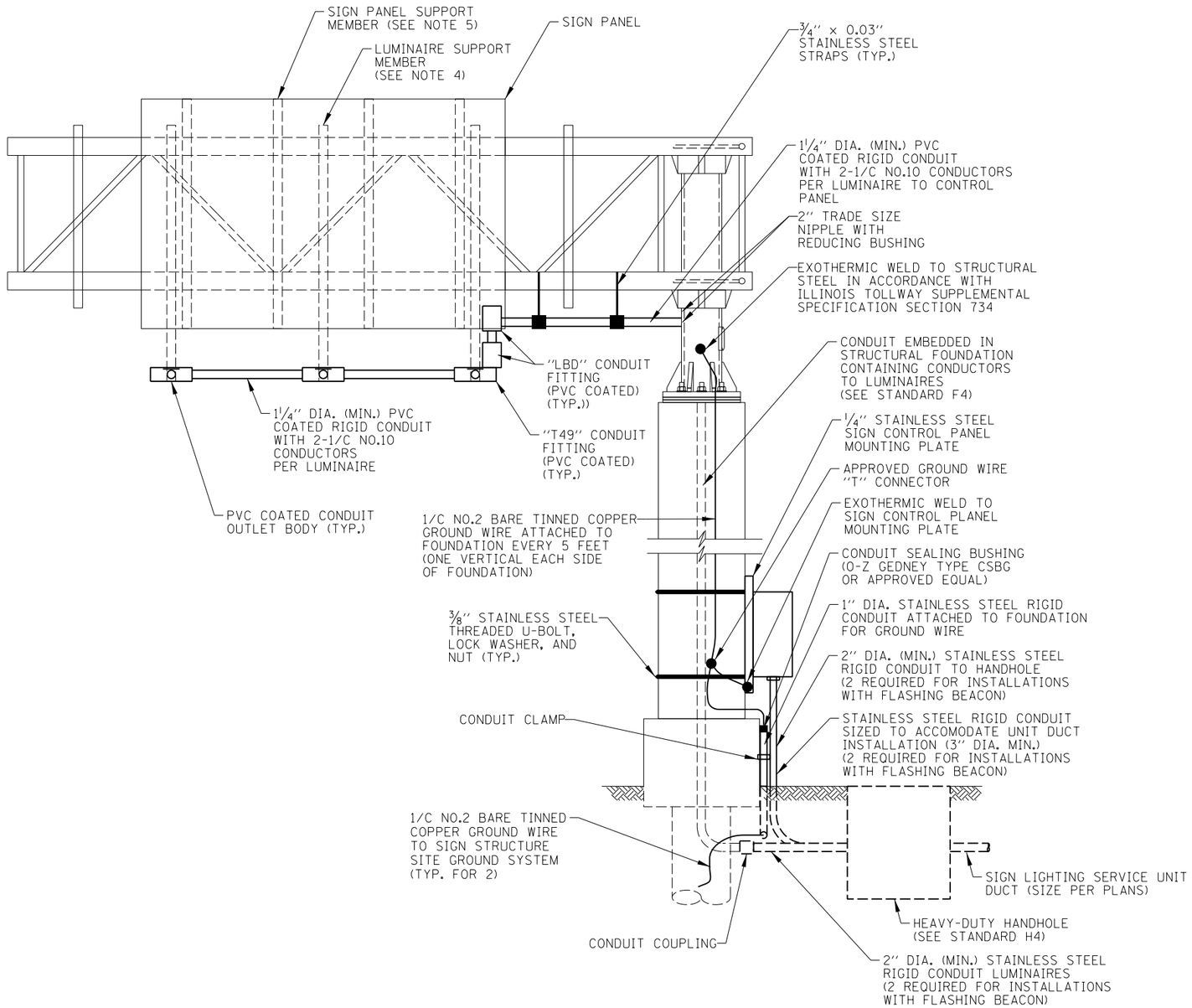

TYPICAL FRONT ELEVATION WITH FLASHING BEACON

(LUMINAIRES NOT SHOWN FOR CLARITY)

NOTES:

1. A GROUND WIRE (NO. 12 AWG.) WILL BE RUN FROM THE GROUNDING BUSHING (OVERHEAD SUPPORT) TO THE GROUNDING BUSHING IN THE JUNCTION BOX.
2. ALL EQUIPMENT SHALL BE GROUNDED AND BONDED IN ACCORDANCE WITH THE NATIONAL ELECTRICAL CODE AND THE NATIONAL ELECTRICAL SAFETY CODE.
3. CONDUITS, CONDUIT FITTINGS, CLAMPS, AND APPURTENANCES ATTACHED TO ALUMINUM STRUCTURAL SUPPORTS SHALL BE PVC COATED ALUMINUM. PVC COATED GALVANIZED STEEL CONDUITS, CONDUIT FITTINGS, CLAMPS, AND APPURTENANCES SHALL BE UTILIZED WHERE ATTACHED TO STEEL STRUCTURAL SUPPORTS OR WHERE ATTACHED TO CONCRETE STRUCTURES UNLESS NOTED OTHERWISE HEREIN. THREADED JOINTS BETWEEN DISSIMILAR METALS SHALL BE COATED WITH AN APPROVED THREAD LUBRICANT.
4. LUMINAIRE SUPPORT MEMBERS TO BE INSTALLED ONLY WHEN THE SIGN IS TO BE ILLUMINATED. MAINLINE TOLL PLAZA APPROACH SIGNS SHALL BE ILLUMINATED.
5. SEE STRUCTURAL DRAWINGS FOR DETAILS OF SIGN SUPPORTS AND FIXTURE SUPPORT CHANNELS.
6. FOR SIGN LUMINAIRE INSTALLATION AND WIRING AND FOR INSTALLATION OF CONDUIT IN FIXTURE SUPPORT CHANNEL, SEE STANDARD H14.
7. ALL STEEL TO BE HOT DIPPED GALVANIZED AFTER WELDING PER ILLINOIS TOLLWAY SUPPLEMENTAL SPECIFICATION SECTION 733.
8. PROVIDE 12" FLASHING BEACON ONLY WHERE INDICATED ON PLANS. FLASHING BEACON TO BE ATTACHED TO SUPPORT WITH STAINLESS STEEL SCREWS AND NEOPORENE SPACERS. DRILLED SCREW HOLES TO BE SEALED WATERTIGHT.

Illinois Tollway

DATE	REVISIONS
2-07-2012	ADDED SIGN POST SUPPORT MEMBERS.
	REVISED NOTES. REMOVED CANISTER
	BALLAST AND ADDED JUNCTION BOX.
3-11-2015	REVISED CONDUITS TO STAINLESS
	STEEL.

CANTILEVER STRUCTURE SIGN LIGHTING DETAILS

STANDARD H12-03

APPROVED Paul Kovacs CHIEF ENGINEER DATE 2-7-2012

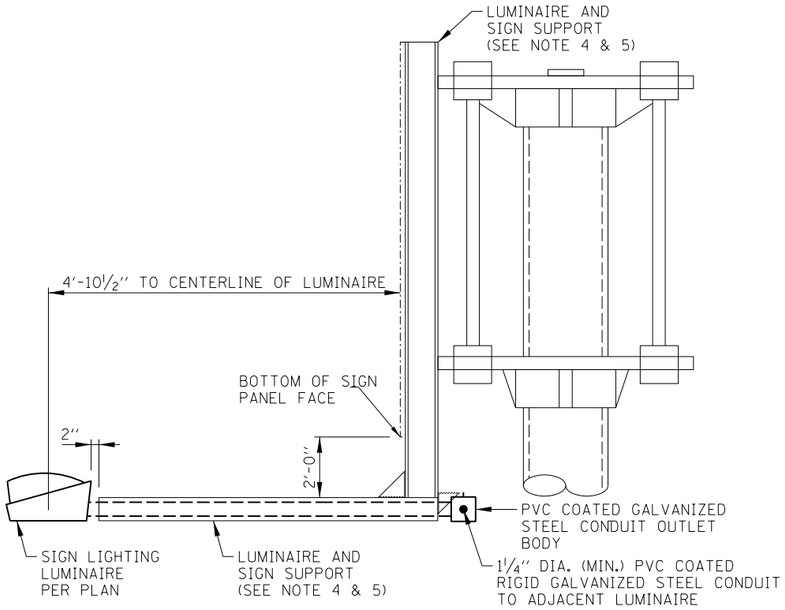

SIGN LUMINAIRE INSTALLATION

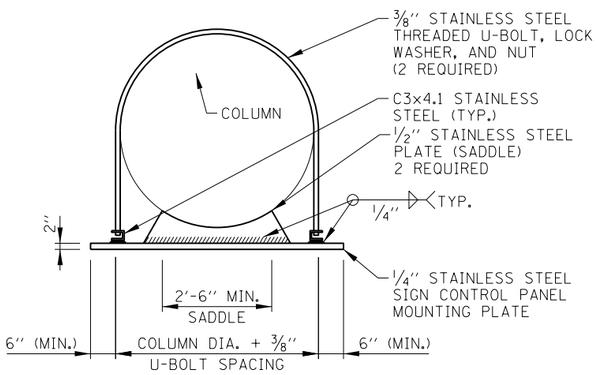

SECTION A-A

(CONTROL EQUIPMENT NOT SHOWN FOR CLARITY)

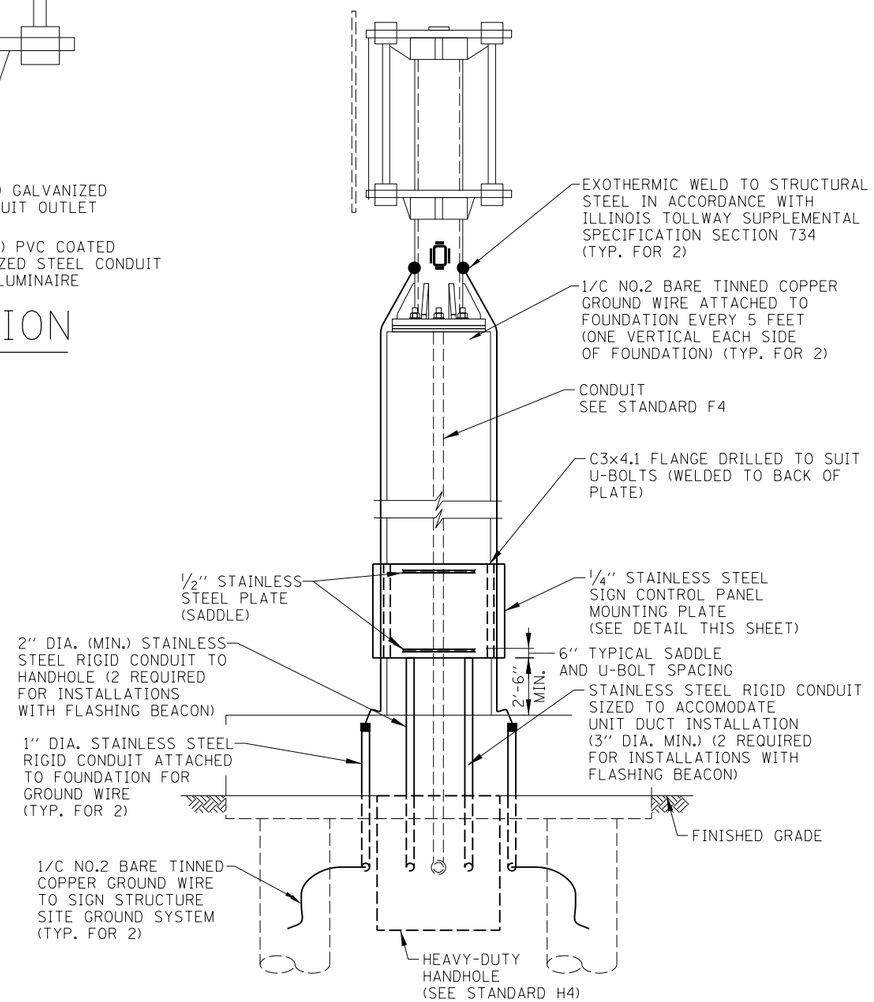

TYPICAL SIDE ELEVATION

(LUMINAIRES NOT SHOWN FOR CLARITY)

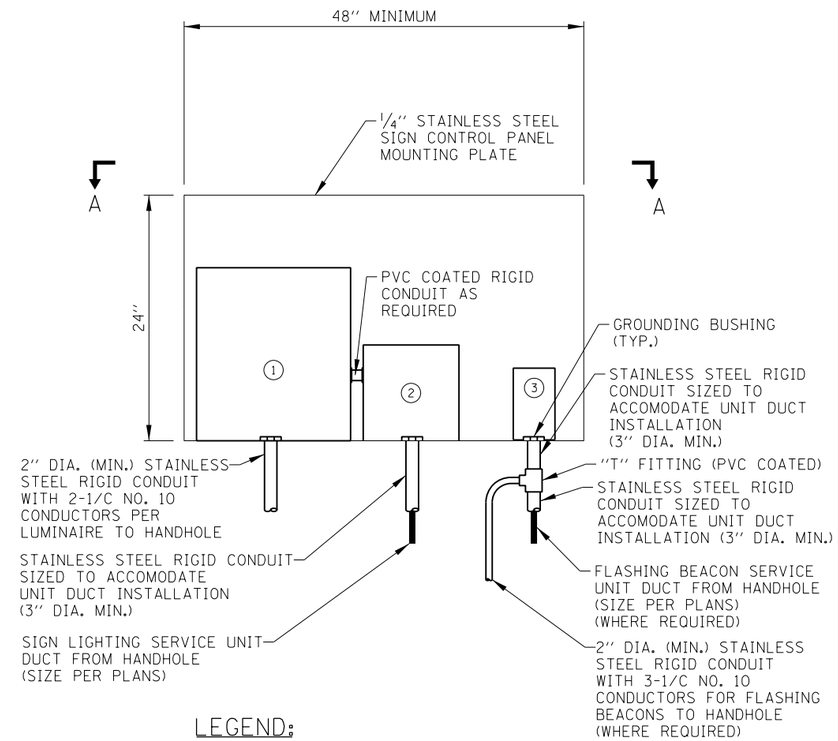

LEGEND:

1. 18"x18"x8" STAINLESS STEEL JUNCTION BOX. PROVIDE SUFFICIENT 30 AMPERE, 600 VOLT TERMINAL BLOCKS TO SPLIT 480 VOLT WIRING FROM SIGN SERVICE CIRCUIT BREAKER TO TWO NO. 10 WIRES FOR EACH LUMINAIRE.
2. SIGN LIGHTING SERVICE - CIRCUIT BREAKER (30 AMP/2 POLE) IN NEMA TYPE 4 C.I. ENCLOSURE, OZ TYPE "YW" WITH MOUNTING FEET OR APPROVED EQUAL.
3. FLASHING BEACON CONTROLLER.

TYPICAL SIGN CONTROL PANEL DETAIL

(FOR TYPICAL WIRING DIAGRAM SEE STANDARD H14)

SHEET 2 OF 2

Illinois Tollway

CANTILEVER STRUCTURE
SIGN LIGHTING DETAILS

STANDARD H12-03

NOTES:

SEE SHEET 1 OF THIS SERIES FOR NOTES.

Paul Kovacs
APPROVED ..... CHIEF ENGINEER
DATE 2-7-2012

RESERVED

DATE	REVISIONS

Illinois Tollway

RESERVED

STANDARD H13-00

APPROVED..... DATE .....
CHIEF ENGINEER

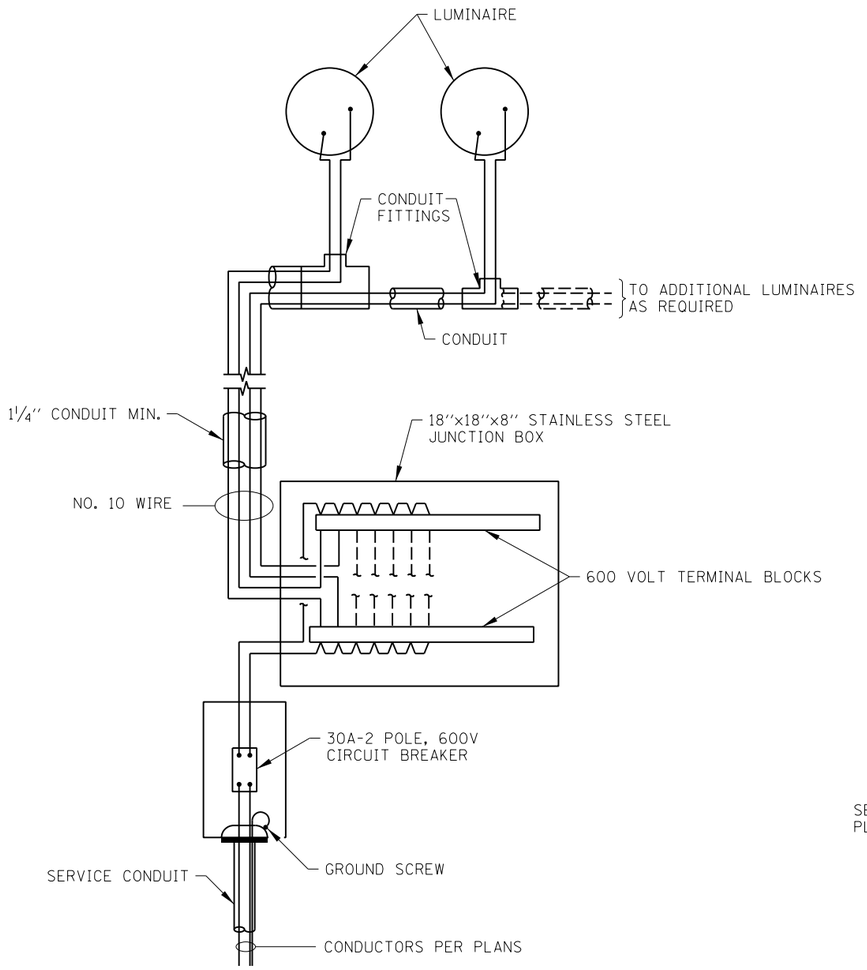

SIGN WIRING DIAGRAM

NO SCALE

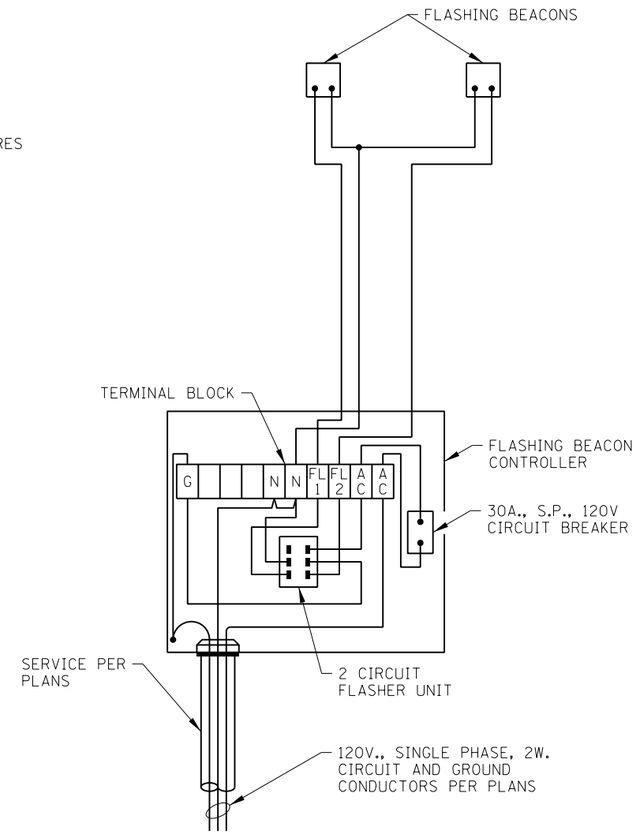

FLASHING BEACON WIRING DIAGRAM

NO SCALE

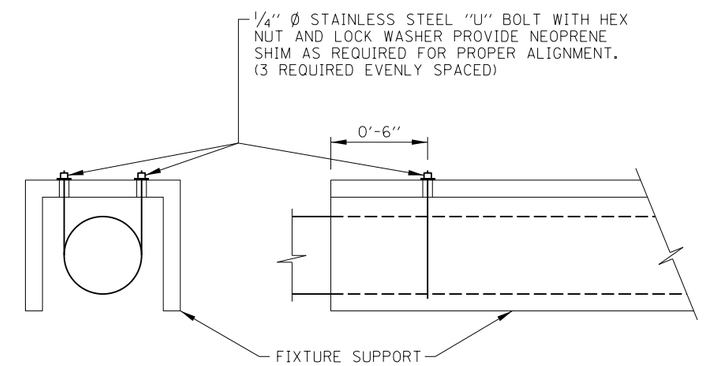

LUMINAIRE SUPPORT DETAIL

NO SCALE

NOTES:

1. SEE STRUCTURAL DRAWINGS FOR DETAILS OF SIGN SUPPORTS AND FIXTURE SUPPORT CHANNELS.
2. CONDUITS, CONDUIT FITTINGS, CLAMPS, AND APPURTENANCES ATTACHED TO ALUMINUM STRUCTURAL SUPPORTS SHALL BE PVC COATED ALUMINUM. PVC COATED GALVANIZED STEEL CONDUITS, CONDUIT FITTINGS, CLAMPS, AND APPURTENANCES SHALL BE UTILIZED WHERE ATTACHED TO STEEL STRUCTURAL SUPPORTS OR WHERE ATTACHED TO CONCRETE STRUCTURES UNLESS NOTED OTHERWISE HEREIN. THREADED JOINTS BETWEEN DISSIMILAR METALS SHALL BE COATED WITH AN APPROVED THREAD LUBRICANT.
3. ALL EQUIPMENT SHALL BE GROUNDED AND BONDED IN ACCORDANCE WITH THE NATIONAL ELECTRICAL CODE AND THE NATIONAL ELECTRICAL SAFETY CODE.

Illinois Tollway

DATE	REVISIONS
2-07-2012	REMOVED CANISTER BALLASTS, NEW JUNCTION BOX AND TERMINAL BLOCKS
3-11-2015	REVISED NOTES

SIGN LUMINAIRE MOUNTING DETAIL AND WIRING DIAGRAMS

STANDARD H14-02

Paul Kovacs
APPROVED ..... CHIEF ENGINEER DATE 2-7-2012

RESERVED

APPROVED..... DATE .....
CHIEF ENGINEER

DATE	REVISIONS

Illinois Tollway

RESERVED

STANDARD H15-00