Illinois Tollway Standard Drawing Revisions

Section L	Fiber Optic	
	Standard	**Modification Summary** **Effective: 03-01-2023**
	L1-05	**Fiber Optic System Typicals and Drawings**
	Sheet 2	Modified "Typical Road Crossing Plan View" to include median barrier.
	Sheet 9	Modified "Located Warning Post" Detail aesthetics.
	Sheet 10	Modified "Illinois Tollway Handhole" Detail aesthetics.

New Sheet

Retired Standard

TYPES OF BURY

CABLE AND CONDUIT
BORED, TRENCHED, AND PLOWED

GENERAL NOTES:

1. UNDERGROUND CONDUIT SHALL BE PLACED AT 42" MINIMUM COVER UNLESS OTHERWISE SPECIFIED ON THE PLANS.
2. UNDERGROUND CONDUIT SHALL BE PLACED AT 48" MINIMUM COVER UNDER STREAM, CREEK AND DRAINAGE DITCH'S UNLESS OTHERWISE SPECIFIED ON THE PLANS.
3. IF WHILE LOWERING THE CONDUIT THERE IS NOT ENOUGH SLACK, ADDITIONAL CONDUIT SHALL BE ADDED. EMPTY CONDUITS CAN BE CUT AND HAVE NEW CONDUIT FUSED OR COMPRESSION COUPLED ON. CONDUITS WITH FIBER INSTALLED SHALL BE RING CUT WITH A TUBE CUTTER SO AS NOT TO DAMAGE THE FIBER.
4. CONDUIT USED ABOVE GROUND SHALL BE STAINLESS STEEL OR FIBERGLASS REINFORCED EPOXY (FRE) CONDUIT. UNDERGROUND CASINGS SHALL BE FRE PER THE SPECIAL PROVISIONS OR HDPE.
5. LOCATE/TRACE WIRE SHALL BE DIRECT BURIED WITH EVERY CONDUIT BUNDLE PATH AS CLOSE TO THE CENTER OF THE CONDUITS AS POSSIBLE. LOCATE/TRACE WIRE SHALL NOT BE INSTALLED IN A CONDUIT WITHOUT APPROVAL OF THE ENGINEER.
6. WHEN AN OPTIC FIBER CONDUIT SEPARATES FROM A CONDUIT BUNDLE OR DUCT BANK, AN ADDITIONAL LOCATE WIRE SHALL BE INSTALLED WITH THAT SEPARATE CONDUIT PATH GOING BACK TO THE PREVIOUS HANDHOLE.
7. ALL LOCATE/TRACE WIRE WILL BE TESTED PER SPECIFICATIONS PRIOR TO ANY FIBER BEING INSTALLED.
8. ALL UNUSED CONDUIT SHALL HAVE 1200 LB MULE TAPE INSTALLED FOR FUTURE USE.

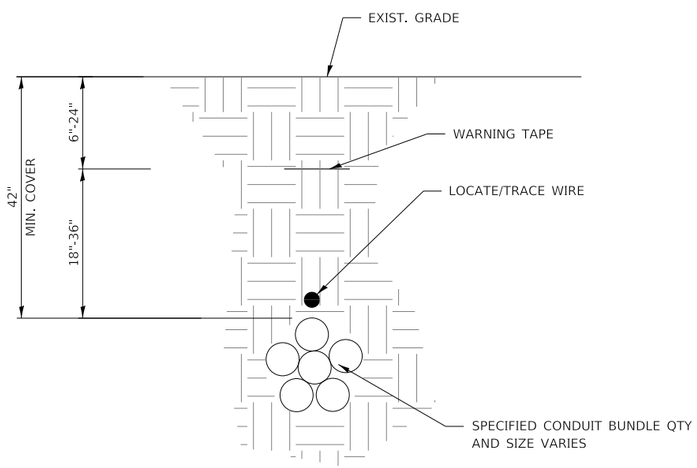

PLOWED CONDUIT BUNDLES
QTY VARIES

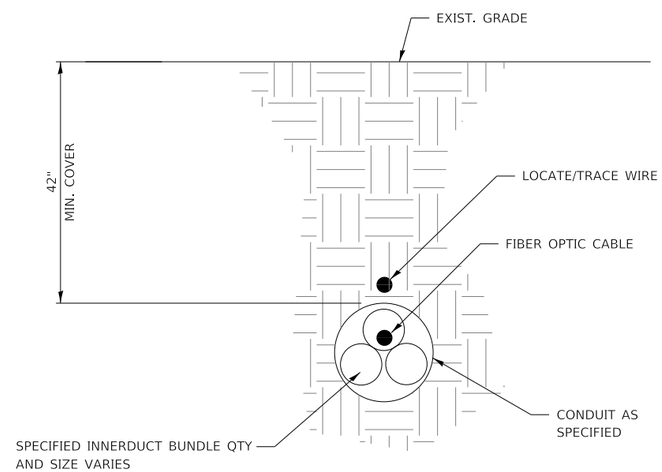

BORED CONDUIT WITH FIBER OPTIC CABLE AND/OR MULTIPLE INNERDUCTS
AS REQUIRED

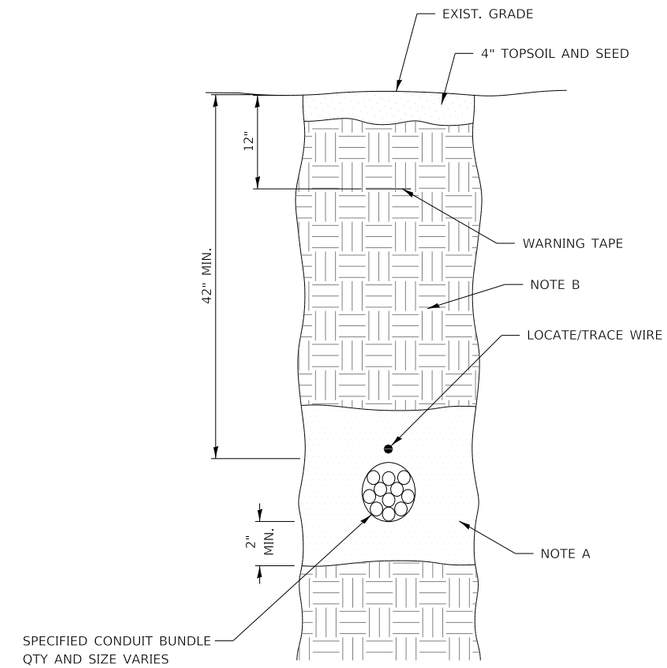

CONSTRUCTION NOTES TRENCHED CONDUIT BUNDLES

A. A MINIMUM OF 2" OF SAND SHALL BE PLACED UNDER THE CONDUIT. SAND SHALL TRANSITION TO BACKFILL ACCORDING TO NOTE B 4" ABOVE CONDUIT.

B. BACKFILL SHALL BE ACCORDING TO ARTICLE 810.04 OF THE STANDARD SPECIFICATIONS.

TRENCHED CONDUIT BUNDLES

APPROVED BY: Manar Nashif
CHIEF ENGINEERING OFFICER

DATE: 03/01/2023

REVISIONS	
DATE	DESCRIPTION
03-01-2023	ADDED MEDIAN BARRIER TO PROFILE
	AND MODIFIED DETAILS.
03-01-2022	ADDED COMPRESSION COUPLING,
	STAINLESS STEEL CONDUIT, COARSE
	GRAVEL, LOCATOR BALL REQUIREMENTS.
	REMOVED HH BOLT REQUIREMENT

Illinois Tollway

FIBER OPTIC SYSTEM
TYPICALS AND DRAWINGS

VERSION:	STANDARD:	SHEET:
2023-03	L1-05	1 OF 15

PLOT DRIVER: c:\bms\wsp-pb-us-pw-02\ac_brad.hoder\d0161163\pdf\IlTollway.pltcfg
PENTABLE: C:\bms\wsp-pb-us-pw-02\ac_brad.hoder\d0296440\Tables\Pen\BlackWhite-IlTollway.TBL
PLOT DATE: 2/19/2023 PLOT TIME: 11:21:51 PM
PLOTTED By: brad.hoder
MODEL NAME: TYPES OF BURY
FILE NAME: pw:\\wsp-us-pw.bentley.com:wsp-us-pw-02\Documents\Illinois Tollway GEG (0976RR)\Standard Drawings and Base Sheets\Standard Drawings\Section - L1\L1-05.dgn
PLOT SCALE: 0.2.000000 '-" / in. PAGE SIZE: 17x11 (in.)

TYPICAL ROAD CROSSINGS

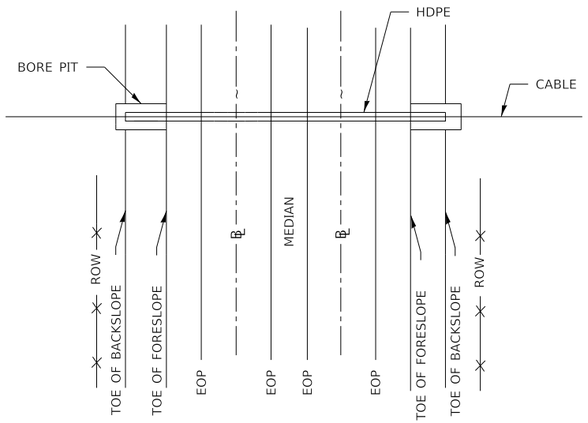

PLAN VIEW

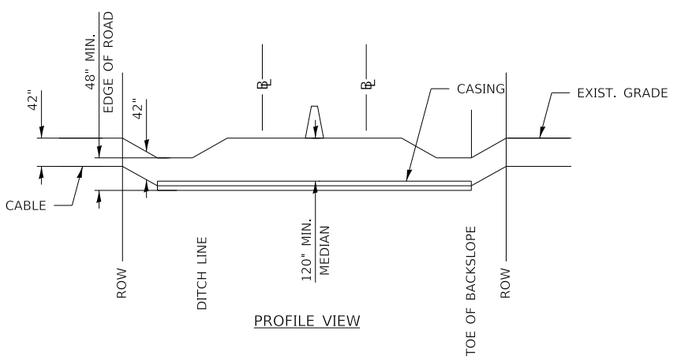

PROFILE VIEW

TYPICAL ROAD CROSSING

GENERAL NOTES:

1. UNDERGROUND CONDUIT SHALL BE PLACED AT 42" MINIMUM COVER UNLESS OTHERWISE SPECIFIED ON THE PLANS.
2. UNDERGROUND CONDUIT SHALL BE PLACED AT 48" MINIMUM COVER UNDER STREAM, CREEK AND DRAINAGE DITCH'S UNLESS OTHERWISE SPECIFIED ON THE PLANS.
3. THE MINIMUM COVER UNDER A PUBLIC ROADWAY, ILLINOIS TOLLWAY HIGHWAY AND RAMPS SHALL BE 120" OR SUCH GREATER DEPTH AS MAY BE REQUIRED TO CLEAR THE PAVEMENT STRUCTURE.
4. IF WHILE LOWERING THE DUCTS, THERE IS NOT ENOUGH SLACK IN THE DUCTS, ADDITIONAL DUCT SHALL BE ADDED. EMPTY DUCTS CAN BE CUT AND HAVE NEW DUCT FUSED OR COMPRESSION COUPLED ON. DUCTS WITH FIBER INSTALLED SHALL BE RING CUT WITH A TUBE CUTTER SO AS NOT TO DAMAGE THE FIBER.
5. HDPE CASING SHALL EXTEND FROM TOE OF BACK SLOPE TO TOE OF BACK SLOPE UNLESS OTHERWISE APPROVED.
6. BORE AND RECEIVING PITS SHALL BE A MINIMUM OF 30 FEET FROM THE EDGE OF SHOULDER ON TOLL HIGHWAYS UNLESS OTHERWISE APPROVED.
7. TOP OF CASING SHALL BE A MINIMUM OF 48" BELOW THE DESIGNED DITCH GRADES ON EACH SIDE OF HIGHWAY.
8. ENDS OF ALL CASING SHALL BE FOAM PLUGGED. (ARNCO HYDRA-SEAL S-60 OR ENGINEER APPROVED EQUAL).
9. PITS FOR BORING ARE NOT PERMITTED IN THE HIGHWAY MEDIAN.
10. TOP CASING SHALL BE A MIN. OF 120" BELOW LOWEST ILLINOIS TOLLWAY ROAD SURFACE.
11. CONDUIT USED ABOVE GROUND SHALL BE STAINLESS STEEL OR FIBERGLASS REINFORCED EPOXY (FRE) CONDUIT. UNDERGROUND CASINGS SHALL BE FRE PER THE SPECIAL PROVISIONS OR HDPE.
12. HANDHOLES SHALL BE INSTALLED ON BOTH SIDES OF ANY STREAM, CREEK, OR RAILROAD CROSSING.

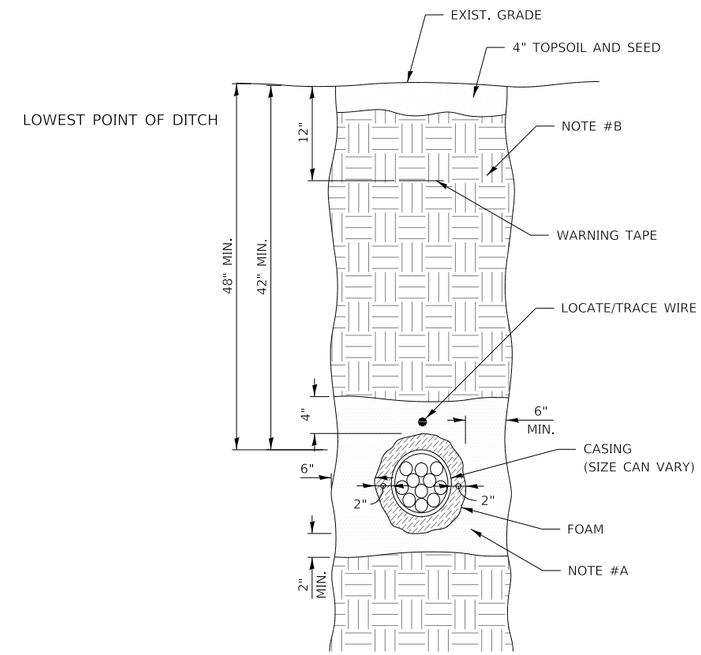

SIDE VIEW

CONSTRUCTION NOTES TRENCHED HDPE BUNDLES

A. A MINIMUM OF 2" OF SAND SHALL BE PLACED UNDER THE CONDUIT. SAND SHALL TRANSITION TO BACKFILL ACCORDING TO NOTE B 4" ABOVE CONDUIT.

B. BACKFILL SHALL BE ACCORDING TO ARTICLE 810.04 OF THE STANDARD SPECIFICATIONS.

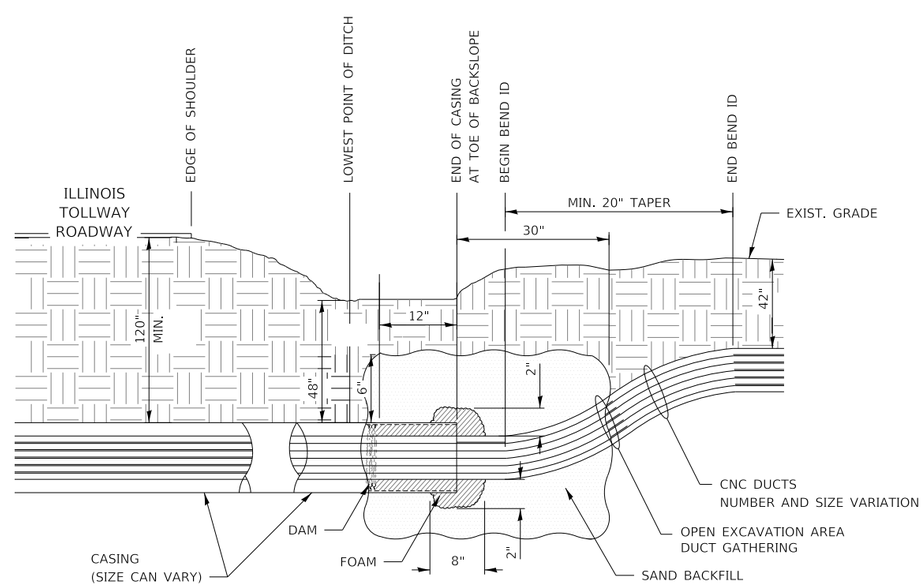

PROFILE VIEW

APPROVED BY: Manar Nashif
CHIEF ENGINEERING OFFICER

DATE: 03/01/2023

Illinois Tollway

FIBER OPTIC SYSTEM
TYPICALS AND DRAWINGS

VERSION:	STANDARD:	SHEET:
2023-03	L1-05	2 OF 15

OUTSIDE PLANT TYPICAL BORES

TYPICAL RAILROAD BORE OR JACK

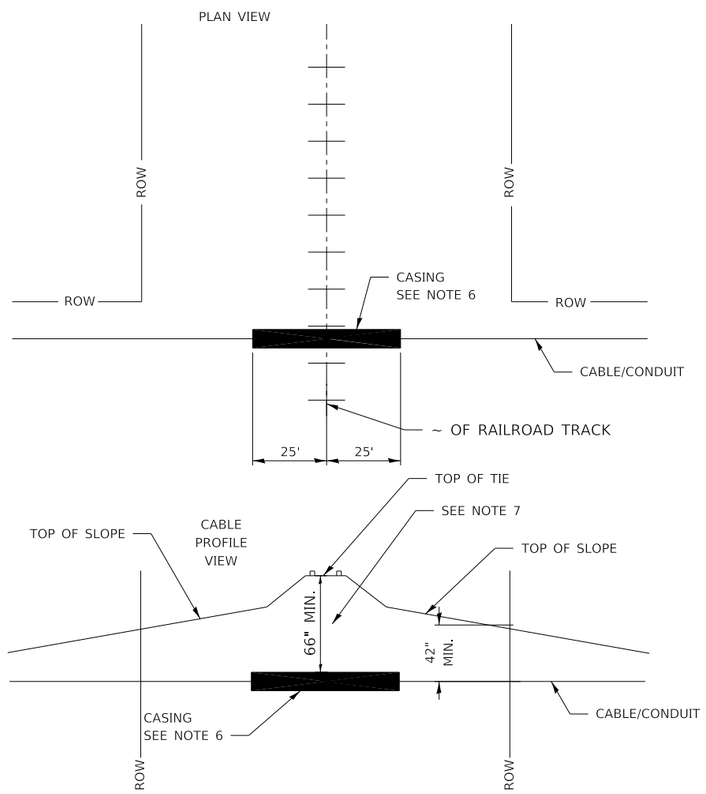

TYPICAL CITY ST. AND DRIVEWAY BORE OR JACK

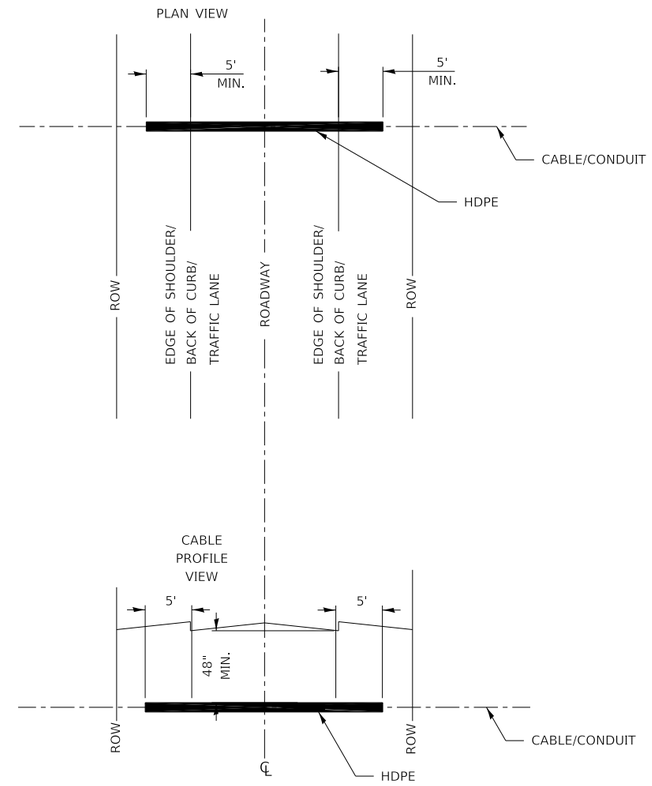

NOTES FOR RAILROAD BORE OR JACK

1. CASING SHALL EXTEND 25 FT. EACH SIDE OF ℄ OF OUTERMOST TRACK OR AS DICTATED BY RAILROAD PERMIT.
2. R.R. BALLAST SHALL NOT BE DISTURBED.
3. BORE AND RECEIVING PITS SHALL NOT BE EXCAVATED CLOSER THAN 10 FT. FROM THE TOE OF SLOPE ON EACH SIDE OF TRACK.
4. ENDS OF ALL CASING SHALL BE FOAM PLUGGED (ARNCO HYDRA-SEAL S-60 OR ENGINEER APPROVAL EQUAL). SEE SHEET 2 OF THIS SERIES.
5. ALL OPERATIONS SHALL MEET REGULATING AGENCY REQUIREMENTS.
6. CASING AS REQUIRED BY CUSTOMER OR RAILROAD OWNER.
7. DEPTH FROM TOP OF CASING TO TOP OF RR TIE MAY BE GREATER THAN 66" AS REQUIRED BY RAILROAD OWNER, NEVER LESS THAN 66".

NOTES FOR CITY STREET AND DRIVEWAY BORE OR JACK

1. HDPE SHALL EXTEND 5 FT. EACH SIDE OF EDGE OF SHOULDER/BACK OF CURB.
2. BORE AND RECEIVING PITS SHALL NOT BE EXCAVATED WITHIN 5 FT. OF EDGE OF SHOULDER/BACK OF CURB.
3. ENDS OF ALL HDPE SHALL BE FOAM PLUGGED. (ARNCO HYDRA-SEAL S-60 OR ENGINEER APPROVED EQUAL). SEE SHEET 2 OF THIS SERIES.
4. HDPE SHALL BE A MINIMUM OF 48" BELOW PAVEMENT ELEVATION TO TOP OF HDPE, MAY BE GREATER THAN 48" AS REQUIRED BY CITY, VILLAGE, TWP/COUNTY, AND/OR GOVERNING AGENCY.
5. ALL OPERATIONS SHALL MEET REGULATING AGENCY REQUIREMENTS.

APPROVED BY: Manar Nashif
CHIEF ENGINEERING OFFICER

DATE: 03/01/2023

Illinois Tollway

FIBER OPTIC SYSTEM
TYPICALS AND DRAWINGS

VERSION:	STANDARD:	SHEET:
2023-03	L1-05	3 OF 15

UTILITY AVOIDANCE DETAIL

NOTES:

1. IF 18" MIN COVER CANNOT BE ACHIEVED, HDPE(S) MUST BE PLACED UNDER EXISTING UTILITY.
2. 12" MIN SEPARATION MUST BE ADHERED TO BETWEEN GALVANIZED RIGID STEEL/CASING HDPE AND EXISTING UTILITY.
3. NO DIRECT BURY UNDER ANY EXISTING UTILITY. ALL CROSSINGS SHALL BE VISUALLY VERIFIED.
4. MINIMUM 18" TO 24" SEPARATION FOR OIL, GAS UTILITY BETWEEN PIPE AND CONDUIT (OR AS REQUIRED BY UTILITY OWNER).
5. IF CROSSING AN EXISTING UTILITY, SHOULD BE CONSTRUCTED AS CLOSE TO 90° AS POSSIBLE.

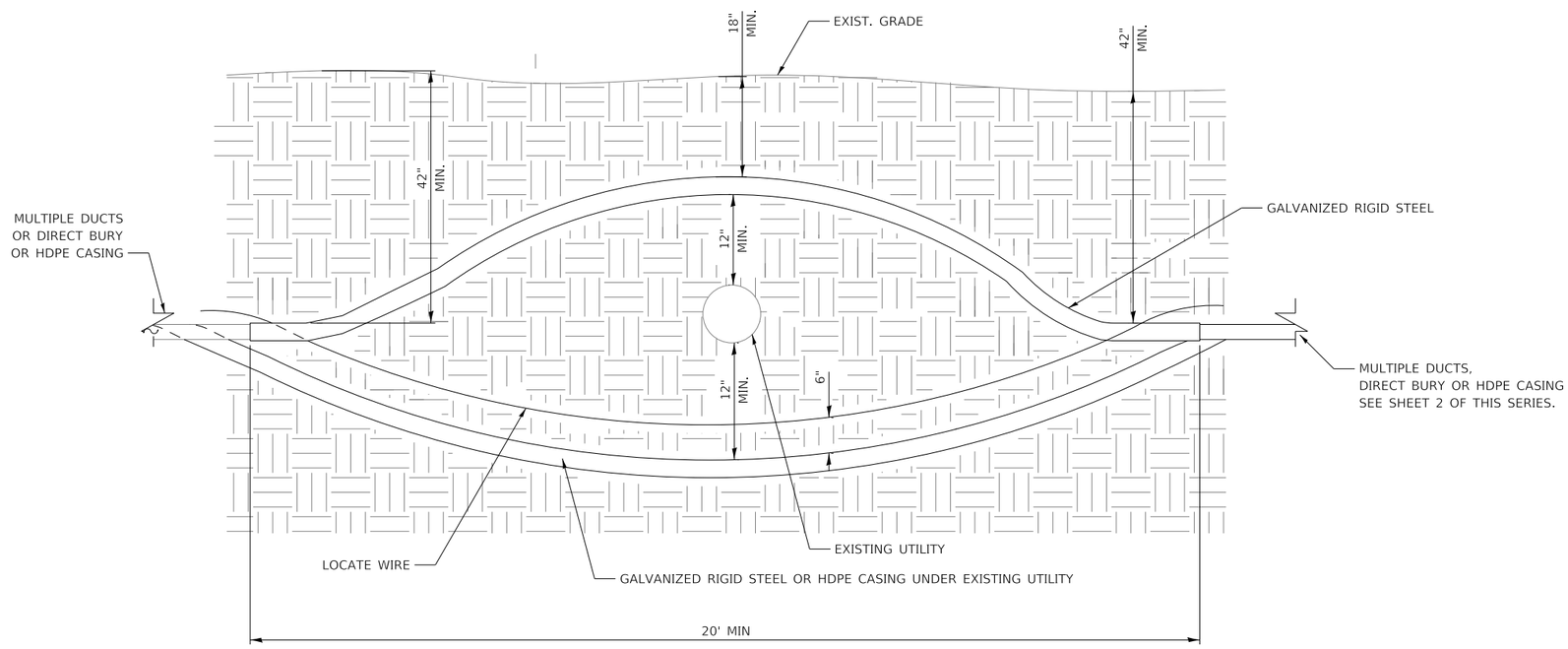

APPROVED BY: Manar Nashif
CHIEF ENGINEERING OFFICER

DATE: 03/01/2023

Illinois Tollway

FIBER OPTIC SYSTEM
TYPICALS AND DRAWINGS

VERSION:	STANDARD:	SHEET:
2023-03	L1-05	4 OF 15

COUPLINGS DETAILS

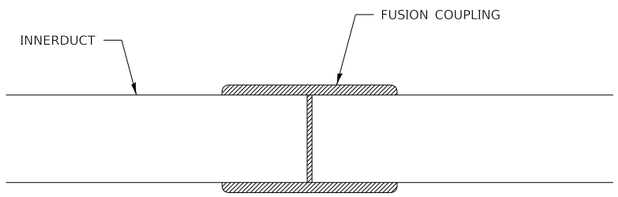

NOTE:

IN A PROPER ELECTROFUSION JOINT, MOLTEN MATERIAL FLOWS TO THE COLD ZONE WHERE IT SOLIDIFIES AND FREEZES OFF THE ESCAPE PATH. WITH THE MOLTEN MATERIAL CONTAINED, MELT PENETRATION WILL BUILD INTERFACE PRESSURE. WIRE WINDINGS WILL FLOW IN A DESIGNED AND CONTROLLED PATTERN AND A PROPER BONDING OF MATERIALS CAN BE OBTAINED.

PROPER FUSION DETAIL

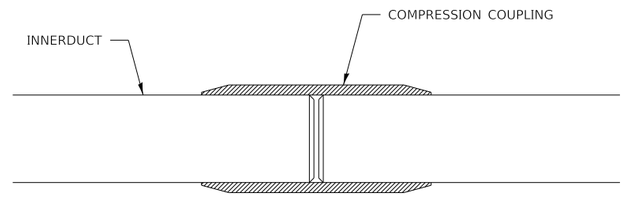

COMPRESSION COUPLING DETAIL

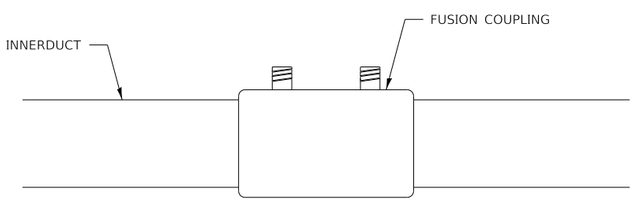

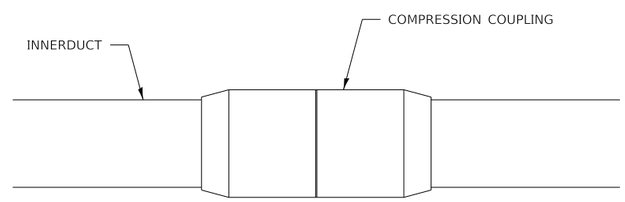

GENERAL NOTE

1. FUSION OR COMPRESSION COUPLINGS SHALL BE USED. INSTALL COMPRESSION COUPLINGS PER MANUFACTURER RECOMMENDATIONS.

FUSION STANDARD JOINING PROCEDURES

1. SHALL INSTALL PER FUSION COUPLING MANUFACTURER RECOMMENDATIONS.
2. THE PIPE SHALL HAVE A SQUARE EVEN CUT.
3. REMOVE ANY BURRS OR SHAVING FROM THE PIPE ENDS THAT MAY HAVE DEVELOPED DURING THE CUTTING PROCESS.
4. CLEAN PIPE ENDS INSIDE AND OUT WITH A CLEAN CLOTH TO REMOVE ANY DIRT OR CONTAMINANTS.
5. PIPE PREPARATION AND CONTAMINATION ARE VERY IMPORTANT CONSIDERATIONS IN THE ELECTROFUSION PROCESS. THEREFORE, CAREFUL ATTENTION SHALL BE GIVEN TO PROPER SCRAPING AND CLEANING PROCEDURES.
6. SCRAPE PIPE ENDS TO REMOVE ANY OXIDATION OR SURFACE CONTAMINATION. FOR BEST RESULTS, SECURE TOOL ON PIPE AND MAKE TWO REVOLUTIONS.
7. DISCONNECT LEADS FROM FITTING. CLAMPING DEVICE SHALL REMAIN IN PLACE TO SECURE PIPE AND FITTING DURING THE RECOMMENDED COOLING TIME. AFTER REMOVING CLAMP, ADDITIONAL COOLING TIME SHALL BE ALLOWED BEFORE SUBJECTING THE JOINT TO BENDING, BURYING, PRESSURE TESTING, OR SIMILAR HANDLING AND BACKFILL STRESS.

   NOTE: IN THE EVENT OF OUT-OF-ROUND PIPE, IT IS IMPORTANT TO ASSURE AN ADEQUATE AND EVEN SCRAPE IS ACHIEVED AROUND THE ENTIRE CIRCUMFERENCE OF THE PIPE. A RUBBER PIPE STOPPER CAN BE PLACED IN THE END OF THE PIPE TO AID IN ROUNDING THE AREA TO BE SCRAPED.
8. MULTIPLE DUCTS FUSION SHALL BE STAGGERED AND AFTER COMPLETION SHALL BE BOUND TOGETHER WITH TY-STRAPS (AT 5' SPACING) SO TO OCCUPY MINIMUM POSSIBLE SPACE AND THEN BACKFILLED.

APPROVED BY: Manar Nashif
CHIEF ENGINEERING OFFICER

DATE: 03/01/2023

Illinois Tollway

FIBER OPTIC SYSTEM
TYPICALS AND DRAWINGS

VERSION:	STANDARD:	SHEET:
2023-03	L1-05	5 OF 15

HANDHOLE

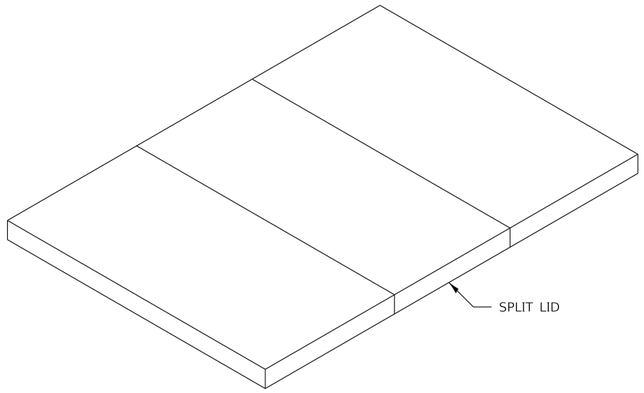

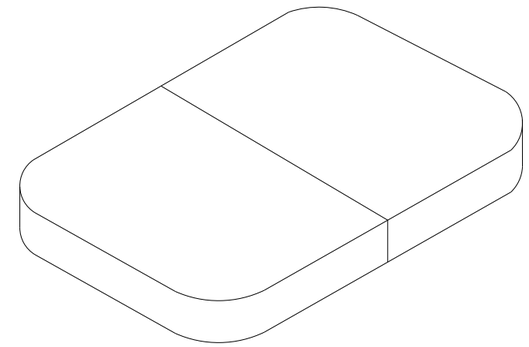

NOTES:

1. NO MARKING ON LID.
2. NO CORING/DRILLING OR ALTERATION OF HANDHOLE SHALL BE ALLOWED.

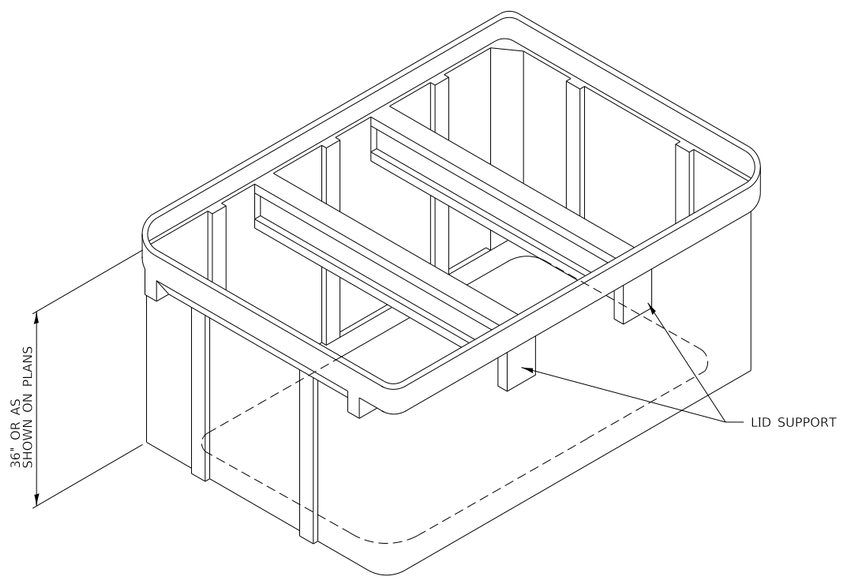

48"x72" HANDHOLE

2 OR 3 SECTION SPLIT LID
(PG STYLE LARGE BOX)

5 OR MORE DUCTS

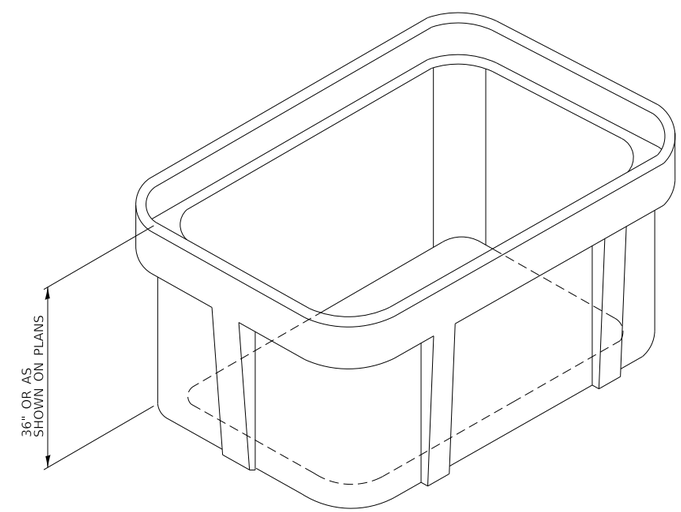

36"x60" HANDHOLE

2 SECTION SPLIT LID
LESS THAN 5 DUCTS

APPROVED BY: Manar Nashif
CHIEF ENGINEERING OFFICER

DATE: 03/01/2023

Illinois Tollway

FIBER OPTIC SYSTEM
TYPICALS AND DRAWINGS

VERSION:	STANDARD:	SHEET:
2023-03	L1-05	6 OF 15

HANDHOLE

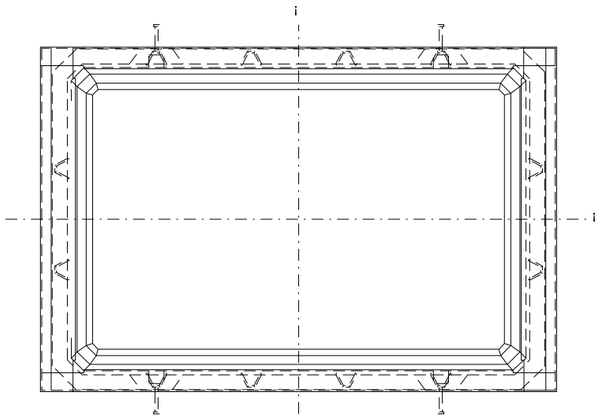

TOP VIEW

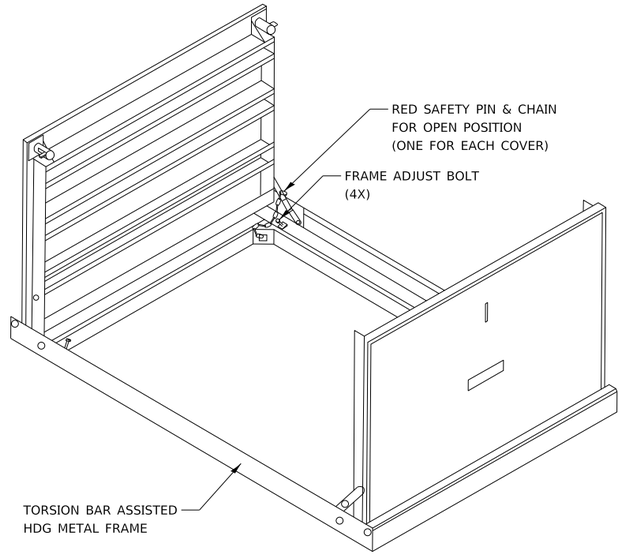

TORSION ASSIST COVER

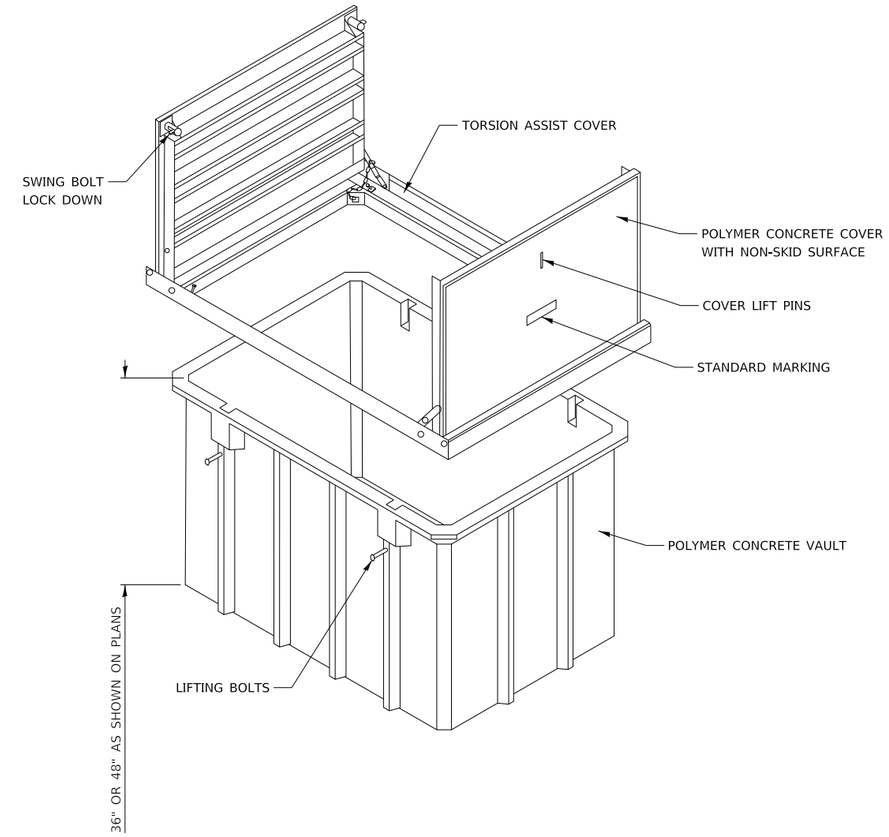

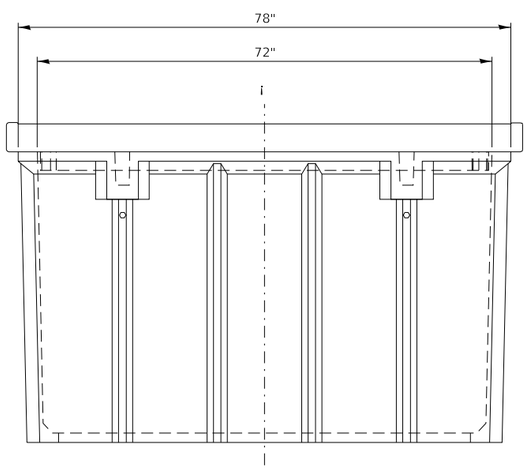

SIDE VIEW

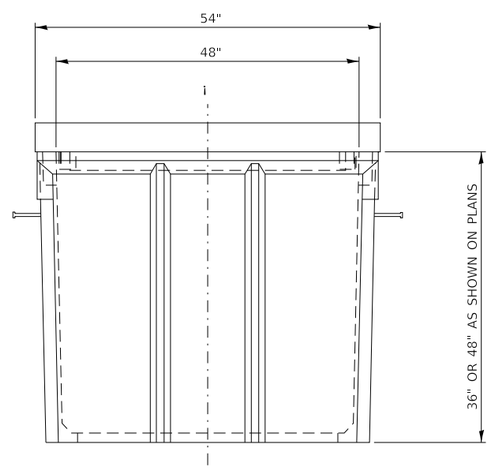

END VIEW

48"X 72" TORSION ASSIST

FOR FIBER OPTIC CABLE SPLICE LOCATIONS
AND SLOPES GREATER THAN OR EQUAL TO 1:4

NOTE:

1. NO CORING/DRILLING OR ALTERATION OF HANDHOLE SHALL BE ALLOWED

APPROVED BY: Manar Nashif
CHIEF ENGINEERING OFFICER

DATE: 03/01/2023

Illinois Tollway

FIBER OPTIC SYSTEM
TYPICALS AND DRAWINGS

VERSION:	STANDARD:	SHEET:
2023-03	L1-05	7 OF 15

HDPE AND FIBER OPTIC CABLE PLACEMENT IN HANDHOLE

TABLE "A"

FIBER COUNT	MINIMUM BEND RADIUS (AT REST)
24F	6"
48F	6"
72F	8"
96F	8"
144F	10"
188F	10"
288F	10"
432F	10"
864F	11"

SEE NOTE 9

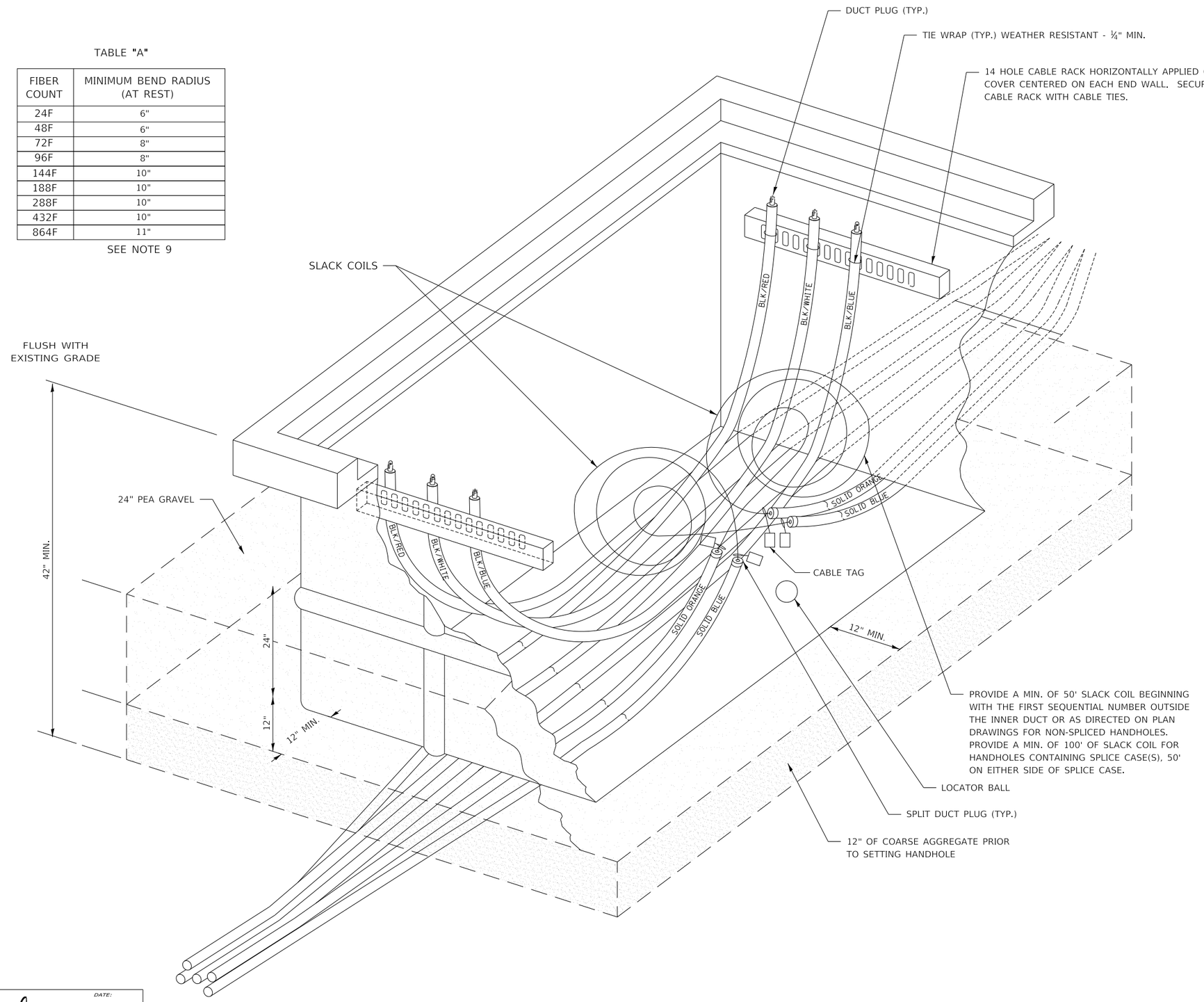

SAMPLE CABLE TAG

NOTES:

1. FIBER OPTIC CABLES SHALL HAVE A CABLE I.D. TAG ON BOTH SIDES OF THE SLACK COIL IDENTIFYING THE OWNER, DUCT COLOR, CABLE COUNT, AND DIRECTION.
2. COLOR NOTED ON INNERDUCTS IS FOR REFERENCE ONLY.
3. COIL FIBER CABLE IN HANDHOLE ENSURING THAT THE BEND RADIUS MEETS THE VALUES IN TABLE "A".
4. EACH FIBER CABLE COIL SHALL BE TIED TOGETHER IN A SINGLE TIGHT BUNDLE.
5. EACH FIBER COIL BUNDLE SHALL BE COILED TIGHTLY ENOUGH THAT IT IS NOT COMPRESSED WHEN THE HANDHOLE LID IS CLOSED.
6. FIBER COIL BUNDLE SHALL BE LABELED WITH OWNER, END LOCATIONS, FIBER TYPE, AND FIBER COUNT.
7. FIBER SPLICE CONTAINER SHALL BE PLACED IN THE HANDHOLE ALLOWING FOR EASY ACCESS AND LABELED WITH OWNER, END LOCATIONS, FIBER TYPE, AND FIBER COUNT.
8. FIBER CONDUIT SHALL EXTEND INTO THE HANDHOLE 12 TO 18 INCHES WITH THE END TURNED UP AND SEALED TO MINIMIZE WATER ENTERING THE CONDUIT. SPARE CONDUITS SHALL EXTEND TO CABLE RACK ON OPPOSITE WALL.
9. MANUFACTURER'S SPECIFICATIONS OF MINIMUM BEND RADIUS SUPERCEDE TABLE "A".
10. LOCATOR BALL SHALL BE PLACES IN HANDHOLES CONTAINING A SPLICE ENCLOSURE. PLACE LOCATOR BALL IN THE MIDDLE OF HANDHOLE.

APPROVED BY: Manar Nashif
CHIEF ENGINEERING OFFICER

DATE: 03/01/2023

Illinois Tollway

FIBER OPTIC SYSTEM TYPICALS AND DRAWINGS

VERSION:	STANDARD:	SHEET:
2023-03	L1-05	8 OF 15

FIBER HANDHOLE SITE DETAIL AND GROUNDING

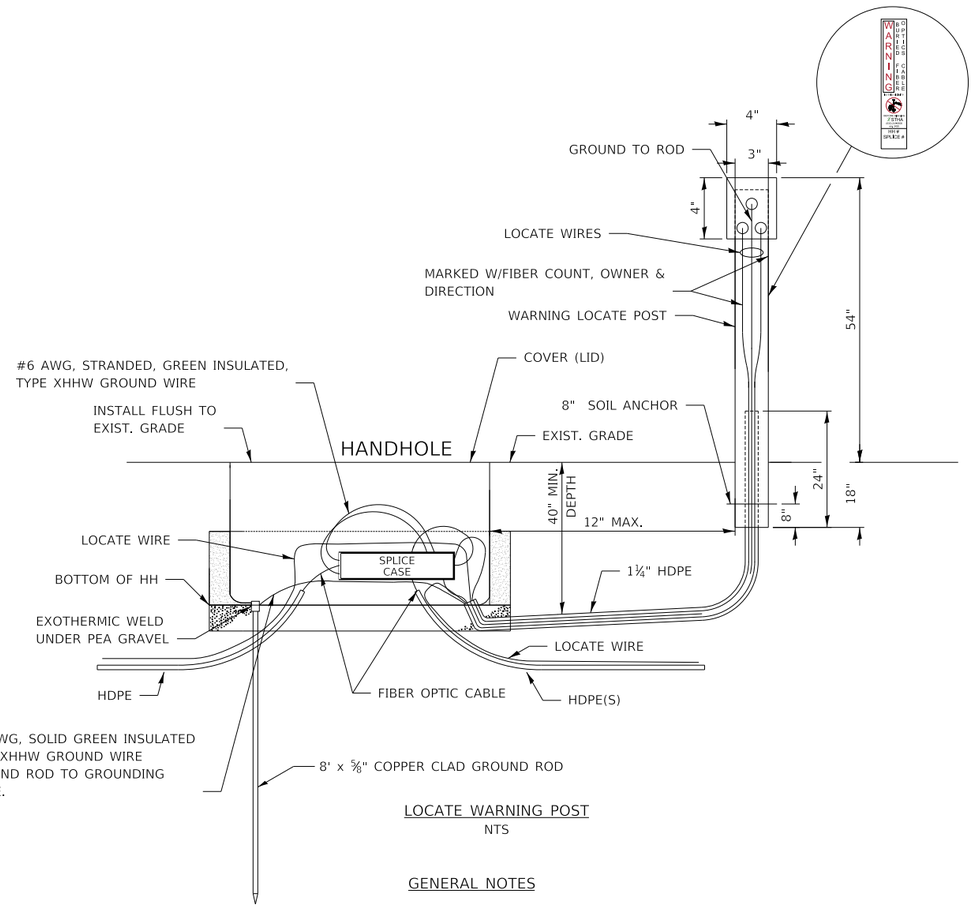

LOCATE WARNING POST

NTS

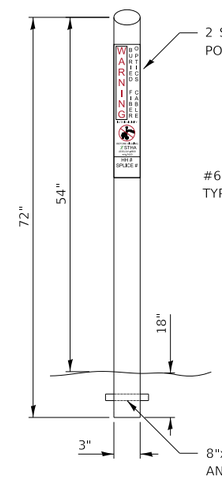

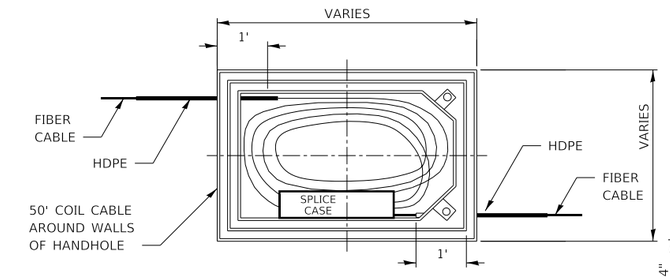

PLACE HDPE TO PROVIDE CRUSH PROTECTION FOR FIBER OPTIC CABLE SEE NOTE #8

HANDHOLE - PLAN VIEW

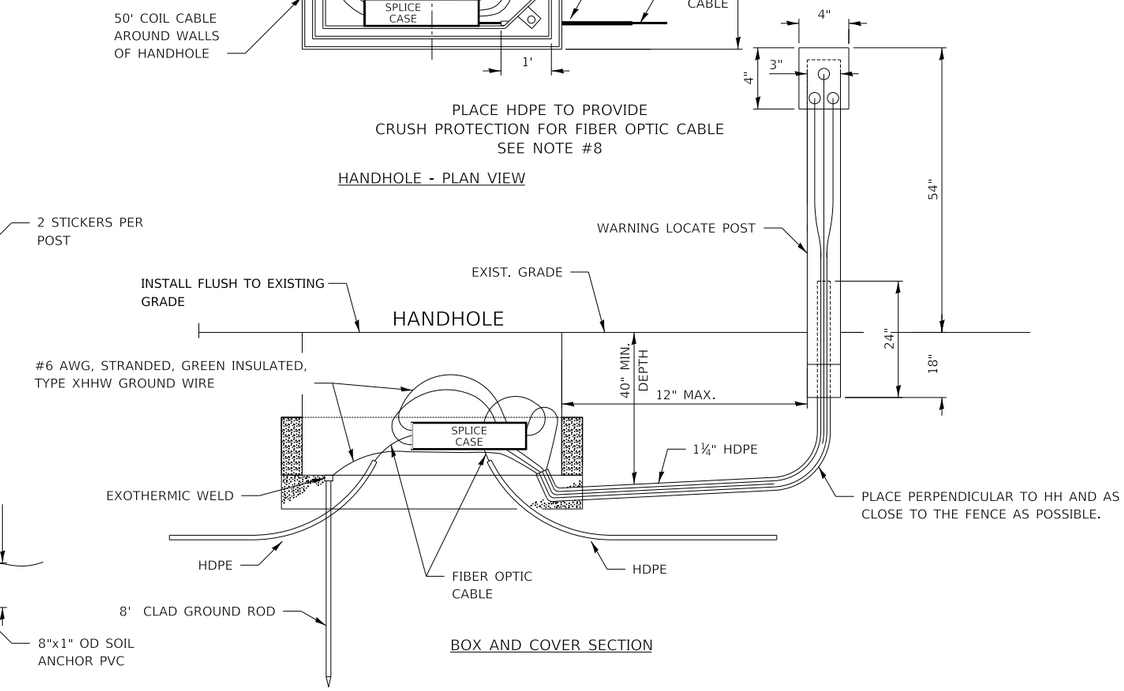

BOX AND COVER SECTION

GENERAL NOTES

1. ROUTE MARKER SHALL BE PLACED 1 FOOT FROM HANDHOLE OR AT FENCE LINE OR RIGHT-OF-WAY LINE IF POSSIBLE.
2. HANDHOLES SHALL BE BACKFILLED ONLY TO THE TOP OF THE BOX. FLUSH TO EXISTING GRADE.
3. COIL FIBER CABLE IN HANDHOLE ENSURING THAT THE BEND RADIUS SHALL NOT EXCEED 6".
4. INSTALL GROUND ROD & EXOTHERMIC WELD AS PER MANUFACTURER'S INSTRUCTIONS. PLACE THE #6 GROUND WIRE (TYPE XHHW, SOLID, GREEN INSULATED) THAT HAS BEEN ATTACHED TO THE GROUND ROD AND TO THE CENTER LUG OF THE LOCATE POST.
5. BACKFILL MATERIAL SHALL BE COMPACTED TO THE SATISFACTION OF THE ENGINEER.
6. GROUND WIRE SHALL BE BONDED TO BOTH SHEATHS OF ARMORED FIBER OPTIC CABLE IN THE SPLICE ENCLOSURE USING #6 GROUND STRANDED, GREEN INSULATED WIRE. EACH GROUND SHALL BE ISOLATED WITHIN THE ENCLOSURE.
7. INSTALL 1¼" HDPE CONDUIT FROM HANDHOLE TO WARNING POST TO ALLOW GROUNDING CABLE AND LOCATE TRACE WIRES TO BE INSTALLED.
8. PLACE HDPE OVER FIBER OPTIC CABLE TO PROVIDE CRUSH PROTECTION EXTEND HDPE 1' INSIDE HANDHOLE.
9. NO HANDHOLES WILL BE ALLOWED IN PAVED ROADWAYS OR SHOULDERS.
10. THE TOPS OF ALL HANDHOLES SHALL BE FLUSH WITH THE EXISTING GRADE.
11. HANDHOLE SHALL NOT BE INSTALLED ON STEEP BANKS OR SLOPES WHERE THE COVER CANNOT BE LEVELED WITHIN A TOLERANCE OF ONE INCH (1") OF DROP TO TWELVE INCHES (12") OF GRADE AND REMAIN BURIED.
12. A WATER PROOF SEALING SIMPLEX DUCT PLUG SHALL BE INSTALLED AROUND THE FIBER OPTIC TO SEAL AROUND THE CONDUIT. A WATER PROOF SEALING PLUG SHALL BE INSTALLED IN ALL VACANT CONDUIT.
13. ANY WORK IN AN EXISTING SINGLE MODE HANDHOLE OR INVOLVING AN EXISTING SINGLE MODE DUCT AND FIBER SHALL BE COORDINATED WITH THE TOLLWAY FIBER OPTIC CONTRACTOR. USING A-36 PROCESS.
14. FOR ALL SPLICE AND HANDHOLE, NUMBER DECALS SHALL BE APPLIED AFTER INSTALLATION IS COMPLETED.
15. PLACEMENT OF SIGNS IS PREFERRED OVER POSTS. SIGNS SHALL BE USED ON LOCATIONS WHERE FENCE IS VISIBLE FROM ROAD. POSTS SHALL ONLY BE USED WHERE SIGN WOULD NOT BE VISIBLE FROM ROAD.

APPROVED BY: Manar Nashif
CHIEF ENGINEERING OFFICER
DATE: 03/01/2023

Illinois Tollway

FIBER OPTIC SYSTEM TYPICALS AND DRAWINGS

VERSION:	STANDARD:	SHEET:
2023-03	L1-05	9 OF 15

PLOT DRIVER: c:\bentley\wsp-pw-02\ac_brad_hoder\d0161165\pdf_illTollway.pltcfg
PENTABLE: c:\bentley\wsp-pw-02\ac_brad_hoder\d0296440\Tables\Pen\BlackWhite-IllTollway.TBL
PLOT DATE: 2/19/2023 PLOT TIME: 11:21:58 PM
PLOTTED BY: Brad Hoder
MODEL NAME: FIBER HANDHOLE SITE DETAIL AND GROUNDING
FILE NAME: pw:\\wsp-us-pw.bentley.com:wsp-us-pw-02\Documents\Illinois Tollway GEG (997GRR)\Standard Drawings and Base Sheets\Standard Drawings\Section - LL1-05.dgn
PLOT SCALE: 0.2.000000 ".' / in. PAGE SIZE: 17x11 (in.)

FIBER HANDHOLE SITE DETAIL AND GROUNDING
THIRD PARTY CONDUIT

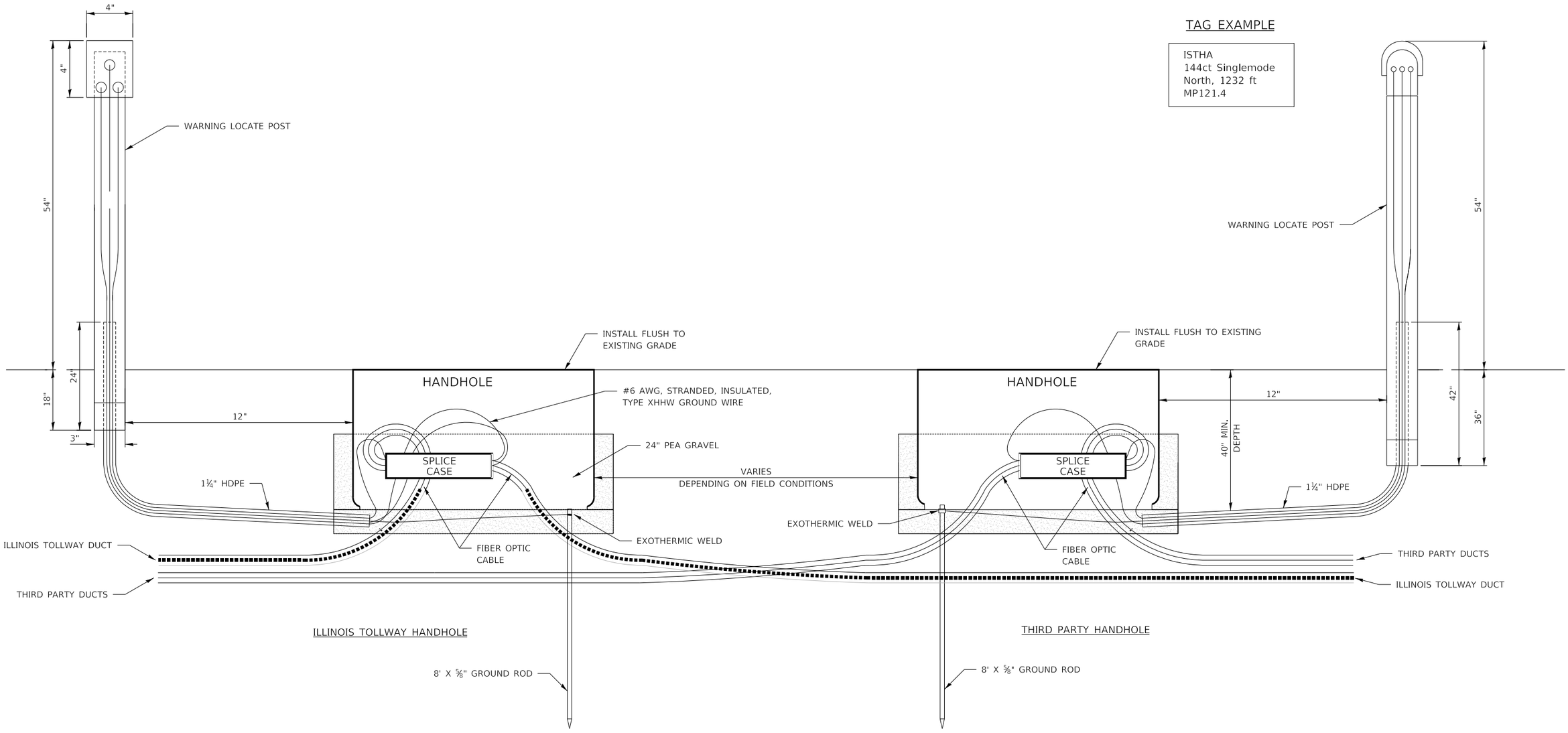

NOTES:

1. WARNING LOCATE POST SHALL BE PLACED 1 FOOT FROM HANDHOLE OR AT FENCE LINE IF POSSIBLE.
2. HANDHOLES SHALL BE BACKFILLED ONLY TO THE TOP OF THE BOX FLUSH TO EXISTING GRADE.
3. INSTALL GROUND ROD & EXOTHERMIC WELD AS PER MANUFACTURER'S INSTRUCTIONS. PLACE THE #6 GROUND WIRE (TYPE XHHW, SOLID, GREEN INSULATED) THAT HAS BEEN ATTACHED TO THE GROUND ROD ON THE CENTER LUG OF THE WARNING LOCATE POST.
4. GROUND WIRE SHALL BE BONDED TO BOTH SHEATHS OF ARMORED FIBER OPTIC CABLE IN THE SPLICE ENCLOSURE USING #6 STRANDED GREEN INSULATED TYPE XHHW GROUND WIRE. EACH GROUND SHALL BE ISOLATED WITHIN THE ENCLOSURE.
5. PLACE HDPE OVER FIBER OPTIC CABLE TO PROVIDE CRUSH PROTECTION EXTEND HDPE 1' INSIDE HANDHOLE.
6. NO HANDHOLES SHALL BE ALLOWED IN PAVED ROADWAYS OR SHOULDERS.
7. THE TOPS OF ALL HANDHOLES SHALL BE FLUSH WITH THE EXISTING GRADE UNLESS THE SLOPE IS GREATER THEN 1:4. IF SO, THE HANDHOLE SHALL BE PLACED LEVEL WITH THE EARTH GRADED AROUND IT SO NO PART OF THE SIDES OF THE HANDHOLE IS EXPOSED.
8. A WARNING LOCATE POST SHALL BE INSTALLED AT ALL HANDHOLES.
9. LOCATE WIRE SHALL BE TESTED FROM HANDHOLE TO HANDHOLE PRIOR TO ANY FIBER BEING INSTALLED IN CONDUIT.
10. LOCATE WIRES SHALL BE TAGGED INSIDE LOCATE POST. THE TAG SHALL SHOW THE FIBER OWNER, FIBER COUNT, FIBER TYPE, DIRECTION (N,S,E,W), DISTANCE TO NEXT LOCATE POST, AND MILE POST AT THAT LOCATION.

APPROVED BY: Manar Nashif
CHIEF ENGINEERING OFFICER

DATE: 03/01/2023

Illinois Tollway

FIBER OPTIC SYSTEM
TYPICALS AND DRAWINGS

VERSION:	STANDARD:	SHEET:
2023-03	L1-05	10 OF 15

PLOT DRIVER: c:\bmc\wsp-pw-02\as_brad.hoder\d0161651\pdf\AllTollway.pltcfg
PENTABLE: c:\bmc\wsp-pw-02\as_brad.hoder\d0296440\Tables\Pen\BlackWhite-IlTollway.TBL
PLOT DATE: 2/19/2023 PLOT TIME: 11:21:59 PM
PLOTTED BY: Brad Hoder
MODEL NAME: FIBER HANDHOLE SITE DETAIL AND GROUNDING THIRD PARTY CONDUIT
FILE NAME: pw:\\wsp-us-pw.bentley.com:wsp-us-pw-02\Documents\Illinois Tollway GEG (9976IRR)\Standard Drawings and Base Sheets\Standard Drawings\Section - L\L1-05.dgn

PLOT SCALE: 0.2.000000 '=' / in. PAGE SIZE: 17x11 (in.)

WALL PENETRATION DETAIL

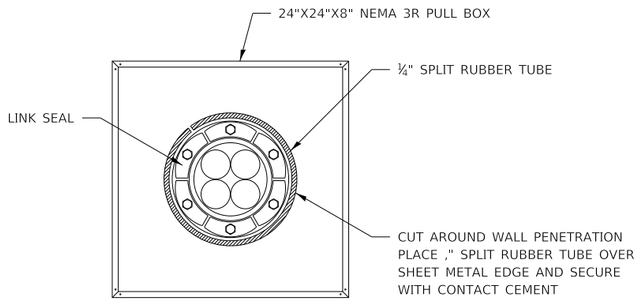

DETAIL A
FRONT VIEW
BELOW GRADE
BUILDING ENTRANCE PULL BOX

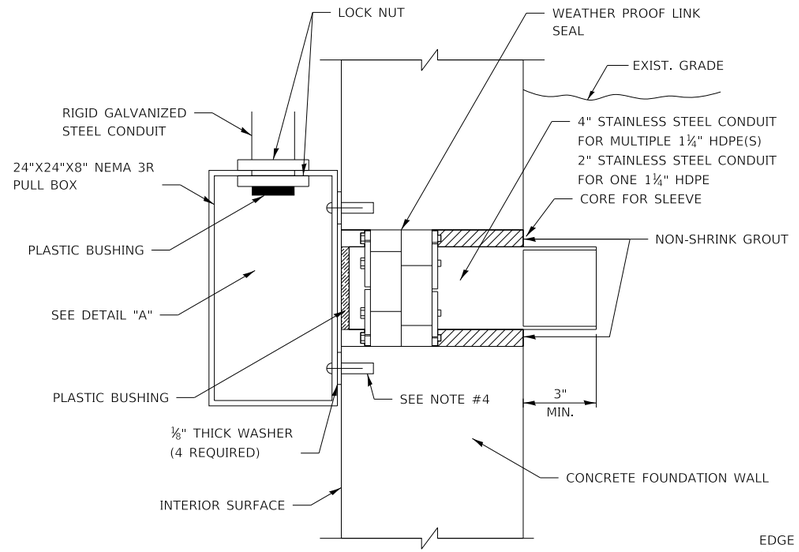

DETAIL B
SIDE VIEW
BELOW GRADE
BUILDING ENTRANCE PULL BOX

NOTE:
THE MAXIMUM PIPE STRAP SPACING SHALL BE 30" MAX. VERTICAL AND 18" HORIZONTAL MAXIMUM DISTANCE. A MINIMUM OF TWO PIPE STRAPS SHALL BE PLACED FOR ANY CONDUIT PLACED HIGHER THAN 4' ABOVE GRADE.

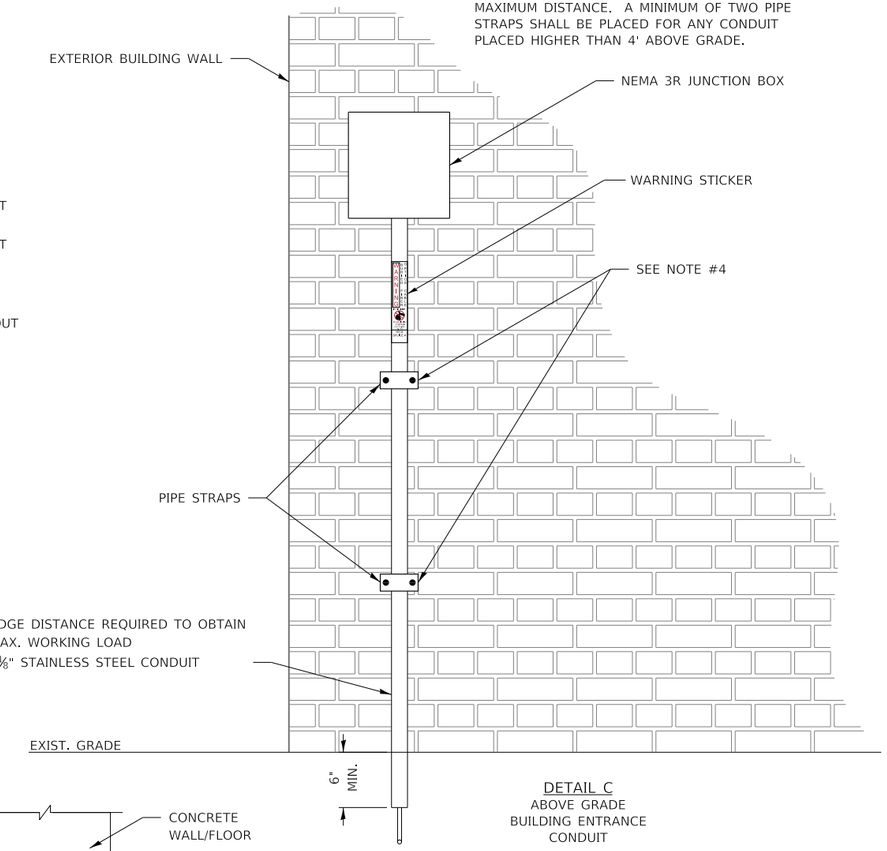

DETAIL C
ABOVE GRADE
BUILDING ENTRANCE
CONDUIT

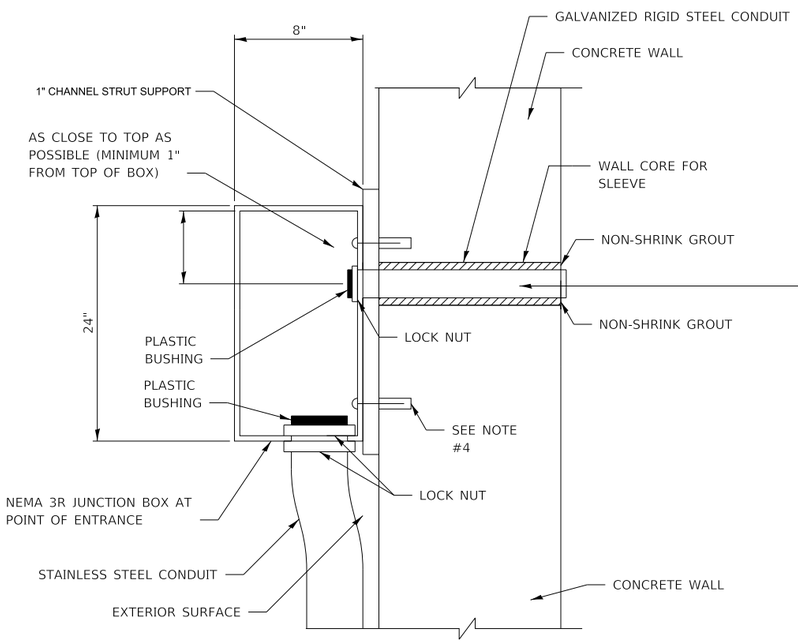

DETAIL D
ABOVE GRADE
BUILDING ENTRANCE PULL BOX

FILL SLEEVE WITH APPROVED FIRESTOP SEALANT. SEALANT TO BE ½" DEEP (MIN.) ON EACH FACE OF WALL WITH MINERAL WOOL USED AS A BACKER MATERIAL.

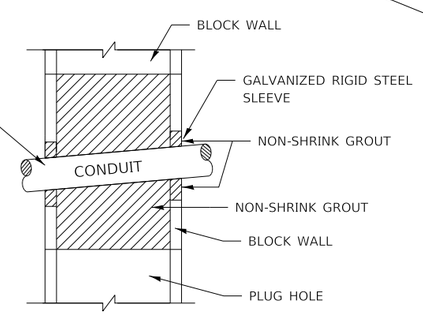

DETAIL E
BLOCK WALL PENETRATION

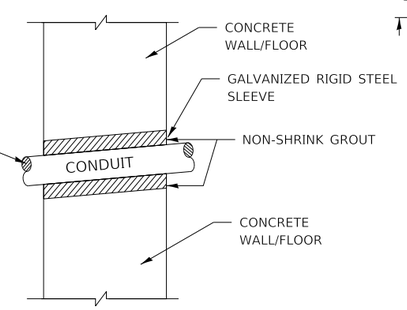

DETAIL F

CONCRETE WALL/FLOOR PENETRATION BUILDING PENETRATIONS SPECIFIED AS DETAIL F MAY BE A COMBINATION OF POURED OR HOLLOW CONCRETE BLOCK WITH A BRICK EXTERIOR. IF HOLLOW BLOCK IS ENCOUNTERED COMPLETE INSTALLATION PER DETAIL E THIS SHEET.

GENERAL NOTES

1. ALL PENETRATIONS SHALL UTILIZE EXISTING UNUSED BUILDING PENETRATIONS TO THE MAXIMUM EXTENT POSSIBLE.
2. ALL EXTERIOR MATERIALS SHALL BE STAINLESS STEEL UNLESS OTHERWISE NOTED.
3. ALL ANCHORS SHALL BE INSTALLED IN SOUND CONCRETE OR MASONRY.
4. USE APPROVED MASONRY ANCHOR.
5. ALL CONDUITS ENTERING THE BUILDING SHALL BE PITCHED AWAY FROM BUILDING.

APPROVED BY: Manar Nashif
CHIEF ENGINEERING OFFICER
DATE: 03/01/2023

Illinois Tollway

FIBER OPTIC SYSTEM
TYPICALS AND DRAWINGS

VERSION:	STANDARD:	SHEET:
2023-03	L1-05	11 OF 15

PLOT DRIVER: c:\bentley\wsp-pb-us-pw-02\pa_brad.hodel\d0316156\pwf-IL Tollway.pltcfg
PENTABLE: c:\bentley\wsp-pb-us-pw-02\pa_brad.hodel\d0296440\Tables\Pen\BlackWhite-IL Tollway.TBL
PLOT DATE: 2/19/2023 PLOT TIME: 11:22:00 PM
PLOTTED BY: brad.hodel@wsp.com
MODEL NAME: WALL PENETRATION DETAIL
FILE NAME: pw:\\wsp-us-pw.bentley.com:wsp-us-pw-02\Documents\Illinois Tollway GEG (0976RR)\Standard Drawings and Base Sheets\Standard Drawings\Section - L\L1-05.dgn
PLOT SCALE: 0:2.000000 '' / in. PAGE SIZE: 17x11 (in.)

UNDERGROUND PENETRATION DETAIL

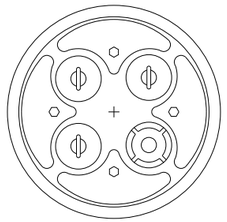

FRONT VIEW
QUAD DUCT PLUG

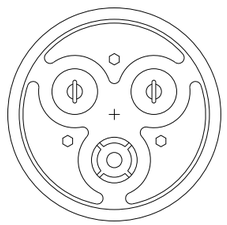

FRONT VIEW
DUCT PLUG

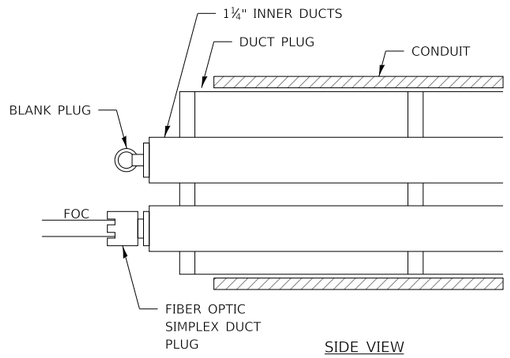

SIDE VIEW
DUCT PLUG

DUCT PLUG DETAIL
NOT TO SCALE

GENERAL NOTES:

1. STAINLESS STEEL CONDUIT EXTENDING THROUGH FOUNDATION WALL SHALL BE ONE CONTINUOUS PIECE (NO COUPLINGS), SQUARE WITH BUILDING AT A SLIGHT ANGLE TO THE EXTERIOR TO PREVENT WATER SEEPAGE.

2. MANHOLE CORES SHALL NOT BE THROUGH MANHOLE CONE.

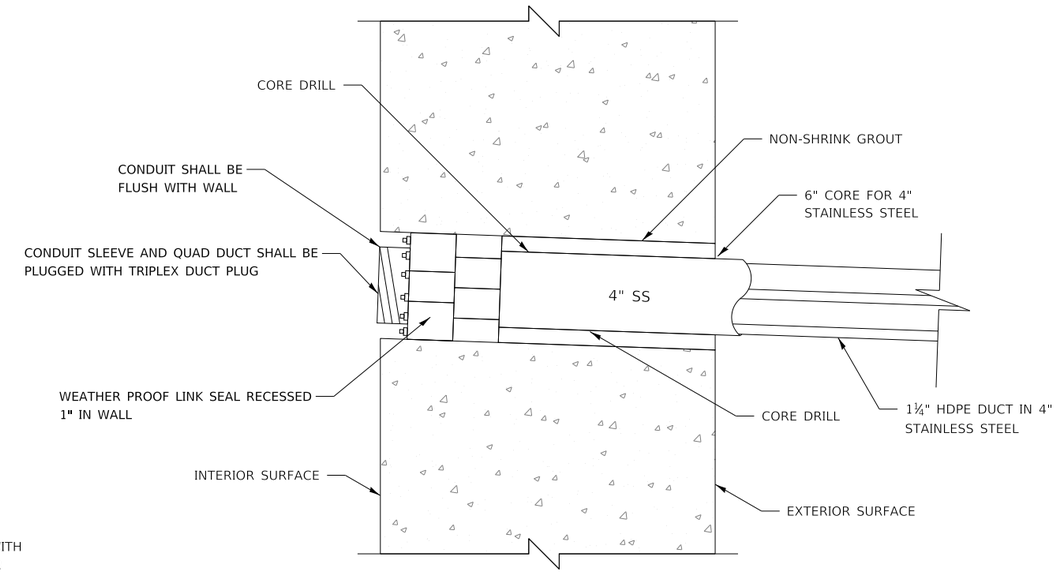

BELOW GRADE PENETRATION BUILDING
NOT TO SCALE

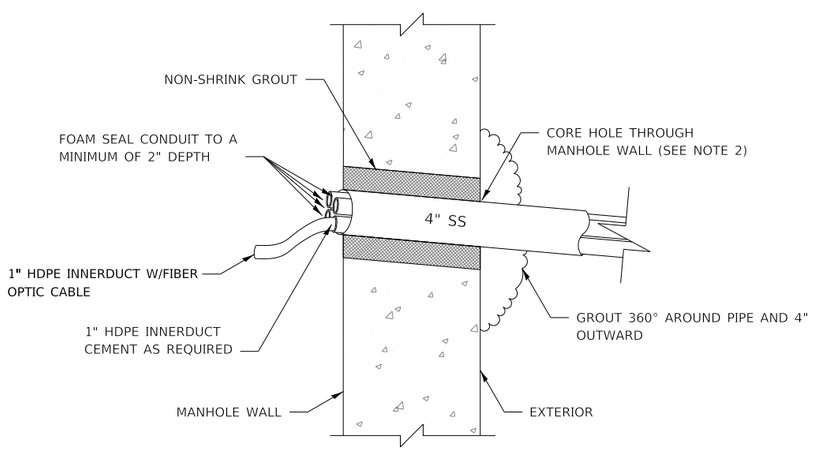

MANHOLE PENETRATION DETAIL
NOT TO SCALE

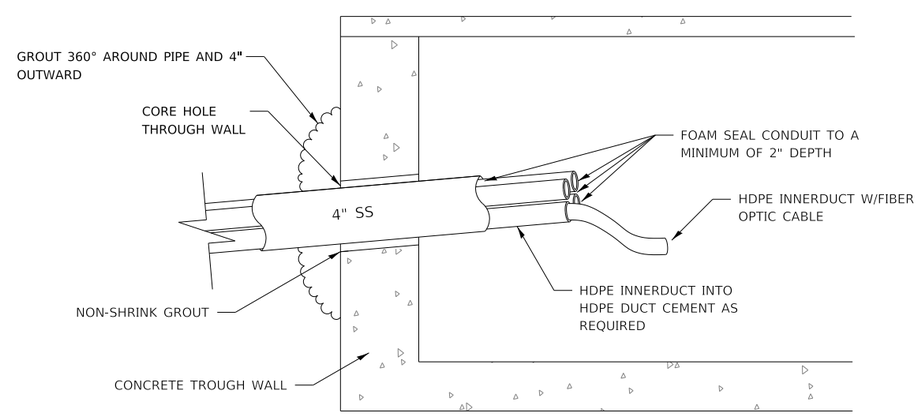

CONCRETE TROUGH PENETRATION
NOT TO SCALE

APPROVED BY: Manar Nashif
CHIEF ENGINEERING OFFICER

DATE: 03/01/2023

Illinois Tollway

FIBER OPTIC SYSTEM
TYPICALS AND DRAWINGS

VERSION:	STANDARD:	SHEET:
2023-03	L1-05	12 OF 15

PLOT DRIVER: c:\bentley\wsp-pb-us-pw-02\ss_brad.hoder\d0316355\pcf\IlTollway.pltcfg
PENTABLE: c:\bmc\wsp-pb-us-pw-02\ss_brad.hoder\d0296440\Tables\Pen\BlackWhite-IlTollway.TBL
PLOT DATE: 2/19/2023 PLOT TIME: 11:22:01 PM
PLOTTED BY: Nashif, Manar
MODEL NAME: UNDERGROUND PENETRATION DETAIL
FILE NAME: pw:\\wsp-us-pw.bentley.com:wsp-us-pw-02\Documents\Illinois Tollway GEG (09768R)\Standard Drawings and Base Sheets\Standard Drawings\Section - L\L1-05.dgn

PLOT SCALE: 0:2.000000 '-' / in. PAGE SIZE: 17x11 (in.)

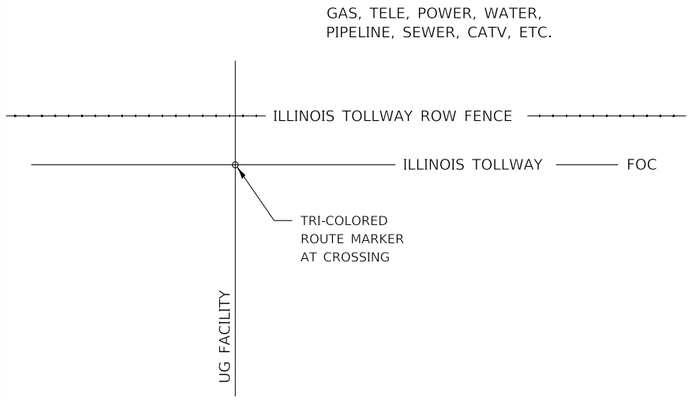

FACILITY CROSSING
FIG. 1

BURIED CABLE SIGNAGE

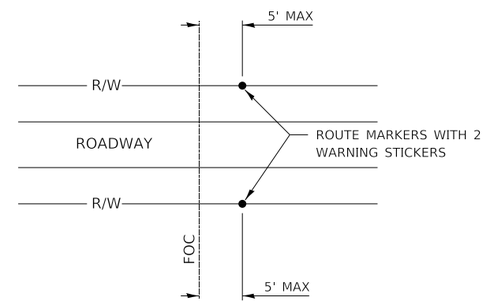

TYPICAL MARKER PLACEMENT AT ROAD AND BRIDGE CROSSING
FIG. 2

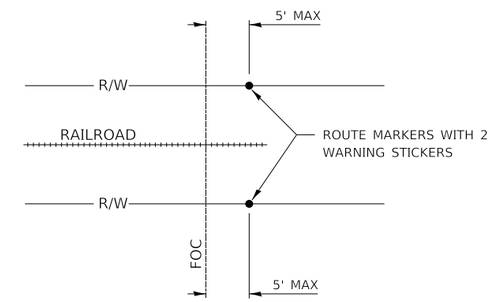

TYPICAL MARKER PLACEMENT AT RAILROAD CROSSING
FIG. 3

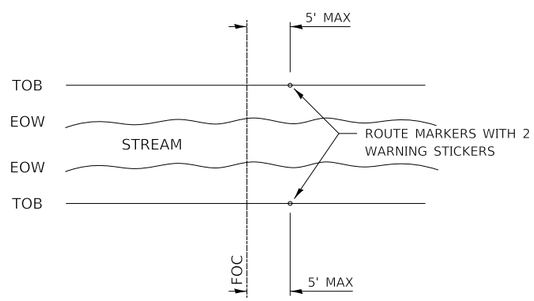

TYPICAL MARKER PLACEMENT AT RIVER,
CREEK & DRAINAGE DITCH CROSSING
FIG. 4

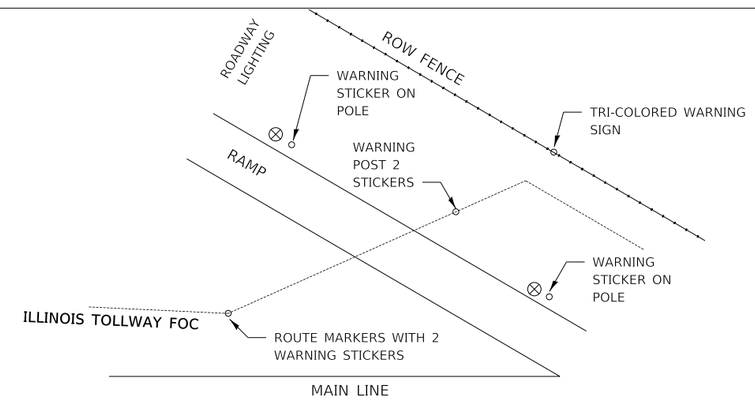

ON/OFF RAMP CROSSING
FIG. 5

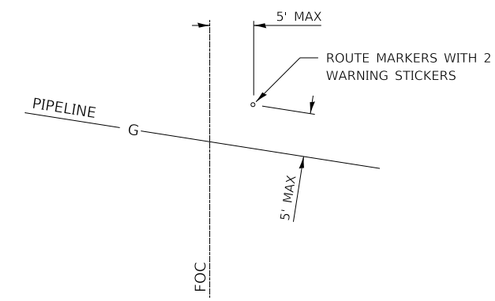

TYPICAL MARKER PLACEMENT AT PIPELINE CROSSING
FIG. 6

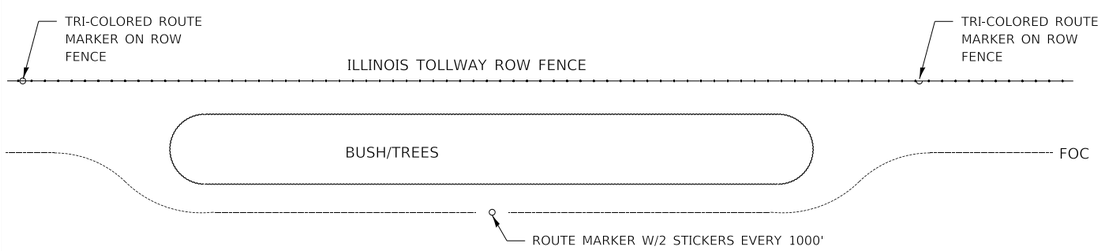

FIG. 7

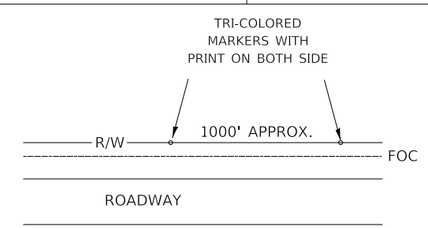

TYPICAL MARKER PLACEMENT
TO BE PLACED NEXT TO R.O.W. FENCE LINE
FIG. 8

GENERAL NOTES:

1. MAINTAIN A MINIMUM DISTANCE OF 5' FROM ANY UTILITY POLE OR PEDESTAL SIGN, MARKER POLE, OR ANY OTHER STRUCTURE.

2. WARNING MARKERS SHALL BE PLACED AT 1000' INTERVALS AND AT CHANGES IN CABLE LOCATION/DIRECTION OR TO MARK THE LOCATION OF HANDHOLES OR AT CROSSING POINT OF OTHER UNDERGROUND FACILITIES. THE CONTRACTOR SHALL ADJUST EXCAVATION AS NECESSARY TO AVOID HIDDEN OBSTACLES AND TO MAINTAIN MAXIMUM DISTANCE FROM THE EDGE OF PAVEMENT. ALL DEVIATIONS SHALL BE APPROVED BY THE ENGINEER.

APPROVED BY: Manar Nashif
CHIEF ENGINEERING OFFICER
DATE: 03/01/2023

Illinois Tollway

FIBER OPTIC SYSTEM
TYPICALS AND DRAWINGS

VERSION:	STANDARD:	SHEET:
2023-03	L1-05	13 OF 15

ROUTE MARKER INSTALLATION PROCEDURE

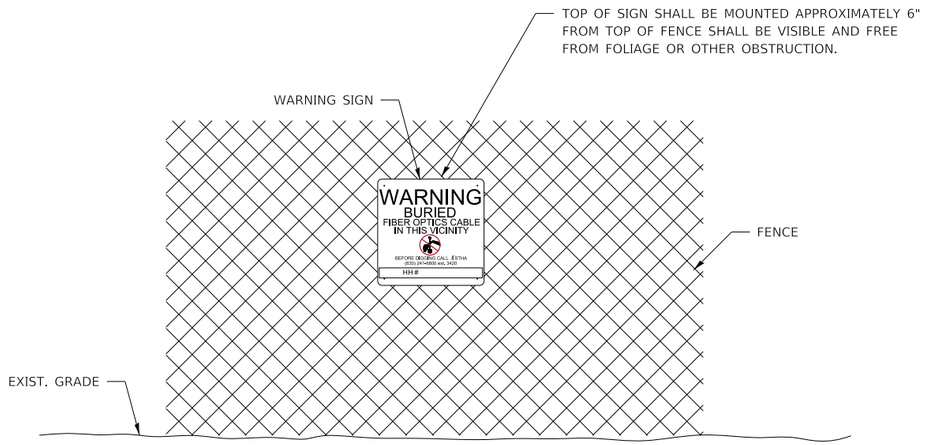

FENCE MOUNTED WARNING SIGN

NTS

INSTALLATION OF WARNING POST:

1. INSTALL WARNING POST ACCORDING TO MANUFACTURERS INSTRUCTIONS AND RECOMMENDATIONS.
2. PLACEMENT OF POST SHALL NOT INTERFERE WITH THE REMOVAL OF HANDHOLE LIDS
3. WARNING SIGN SHALL BE ATTACHED TO ROW FENCE WHEREVER POSSIBLE. UV STABILIZED BLACK NYLON CABLE TIES (14" LENGTH, .30" WIDTH, 120 LBS TENSILE STRENGTH), (4 EA.) 3 WRAPS EACH TIE, SHALL BE USED TO ATTACH WARNING SIGN TO FENCE.
4. SEE SHEET 14 OF THIS SERIES FOR FIBER WARNING LABEL AND WARNING SIGN DETAILS.

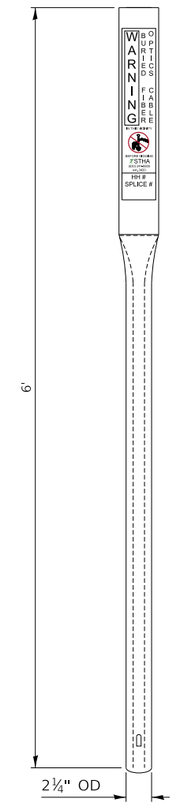

POST

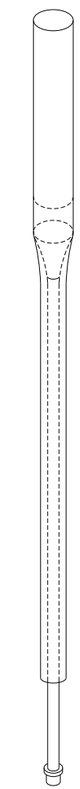

DRIVER

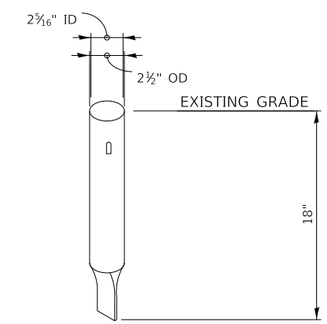

SOIL ANCHOR

APPROVED BY: Manar Nashif
CHIEF ENGINEERING OFFICER

DATE: 03/01/2023

Illinois Tollway

FIBER OPTIC SYSTEM
TYPICALS AND DRAWINGS

VERSION:	STANDARD:	SHEET:
2023-03	L1-05	14 OF 15

FIBER WARNING LABEL & WARNING SIGN DETAILS

FENCE SIGN

ISTHA

Products provided by:

ACP INTERNATIONAL

Part #: SA-ISTHA
Size: 12" T X 9" W
Material: Polyethyene
Color: Black text with Orange bkgd, with white
Holes: 4 - 3/16"

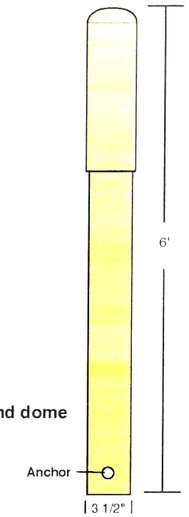

Part #: PP6-ISTHA
Size: 6'
Material: Polydome
Color: Orange Post and dome

ROUTE MARKER POST

Part #: PTP466000-ISTHA - 4" X 6,000', 6MIL Orange with black text

WARNING TAPE

ROUTE MARKER POST DECAL

FLUSH DISC MARKER

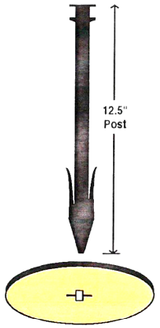

Part #: FMM-6-ISTHA
Size: 6"
Material: Clear .125 Lexan
Color: Black text with Orange bkgd
Holes: center for 12.5 plastic anchor

Part #: D-314-ISTHA
Size: 14" x 3"
Material: Decal
Color: Orange with black text, Black "Warning" panel with white text, White no dig
Scale: Shown @ 50%

NOTE:
SIGN AND LABEL SHOWN IS AVAILABLE THROUGH ACP INTERNATIONAL. ALTERNATE SIGN LABELS SHALL BE SUBMITTED FOR APPROVAL BY THE ENGINEER.

APPROVED BY: Manar Nashif
CHIEF ENGINEERING OFFICER

DATE: 03/01/2023

Illinois Tollway

FIBER OPTIC SYSTEM TYPICALS AND DRAWINGS

VERSION:	STANDARD:	SHEET:
2023-03	L1-05	15 OF 15

ITS CABINET FIBER CONNECTION DETAILS

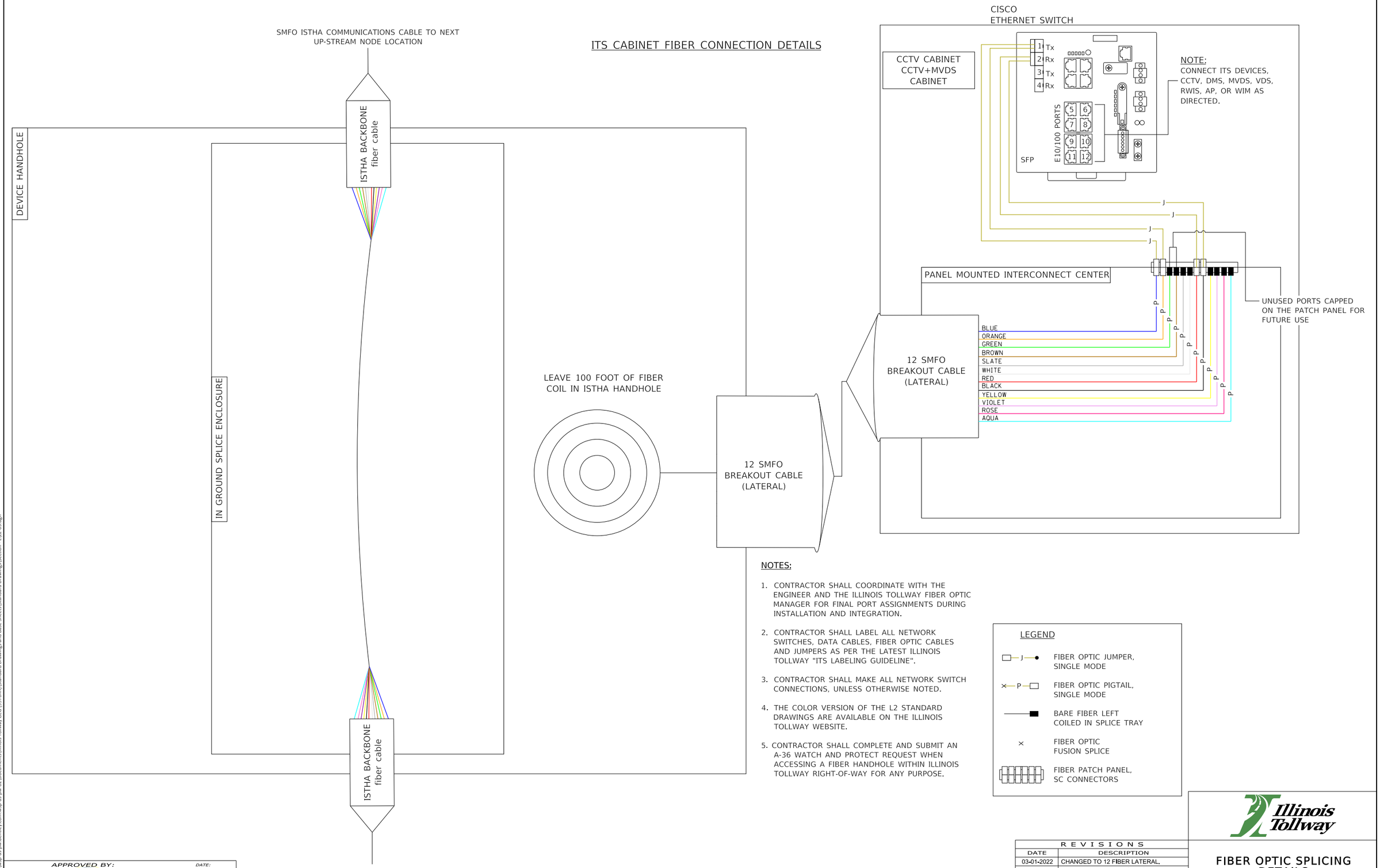

NOTES:

1. CONTRACTOR SHALL COORDINATE WITH THE ENGINEER AND THE ILLINOIS TOLLWAY FIBER OPTIC MANAGER FOR FINAL PORT ASSIGNMENTS DURING INSTALLATION AND INTEGRATION.
2. CONTRACTOR SHALL LABEL ALL NETWORK SWITCHES, DATA CABLES, FIBER OPTIC CABLES AND JUMPERS AS PER THE LATEST ILLINOIS TOLLWAY "ITS LABELING GUIDELINE".
3. CONTRACTOR SHALL MAKE ALL NETWORK SWITCH CONNECTIONS, UNLESS OTHERWISE NOTED.
4. THE COLOR VERSION OF THE L2 STANDARD DRAWINGS ARE AVAILABLE ON THE ILLINOIS TOLLWAY WEBSITE.
5. CONTRACTOR SHALL COMPLETE AND SUBMIT AN A-36 WATCH AND PROTECT REQUEST WHEN ACCESSING A FIBER HANDHOLE WITHIN ILLINOIS TOLLWAY RIGHT-OF-WAY FOR ANY PURPOSE.

LEGEND

J	FIBER OPTIC JUMPER, SINGLE MODE
P	FIBER OPTIC PIGTAIL, SINGLE MODE
	BARE FIBER LEFT COILED IN SPLICE TRAY
×	FIBER OPTIC FUSION SPLICE
	FIBER PATCH PANEL, SC CONNECTORS

APPROVED BY: Paul Kovacs, CHIEF ENGINEERING OFFICER — DATE: 02/17/2019

Illinois Tollway

REVISIONS	
DATE	DESCRIPTION
03-01-2022	CHANGED TO 12 FIBER LATERAL.
03-01-2021	UPDATED ETHERNET SWITCH AND PANELS
03-01-2020	GENERALIZED BACKBONE DETAILS
	CHANGED TO 8 FIBER LATERAL

FIBER OPTIC SPLICING DETAILS

VERSION: 2022-03 | STANDARD: L2-03 | SHEET: 1 OF 2

PLOT DRIVER: c:\bmv\wsp-pb-us-pw-02\ac_brad.hoder\d0161163\pdf.ILTollway.pltcfg
PENTABLE: c:\bmv\wsp-pb-us-pw-02\ac_brad.hoder\d0296440\Tables\Pen\BlackWhite-ILTollway.TBL
PLOT DATE: 3/1/2023 PLOT TIME: 10:37:12 AM
PLOTTED BY: Brad Hoder
MODEL NAME: ITS CABINET FIBER CONNECTION DETAILS
FILE NAME: pw:\\wsp-us-pw.bentley.com:wsp-us-pw-02\Documents\Illinois Tollway GEG (0976RR)\Standard Drawings and Base Sheets\Standard Drawings\Section - L1\L2-03.dgn

PLOT SCALE: 0.1667 ' / in. PAGE SIZE: 17x11 (in.)

PROPOSED NETWORK SWITCH PORT ASSIGNMENT SCHEMATIC

CISCO ETHERNET SWITCH
10/100/1000 ETHERNET AND 10G SFP PORT ARRANGEMENT

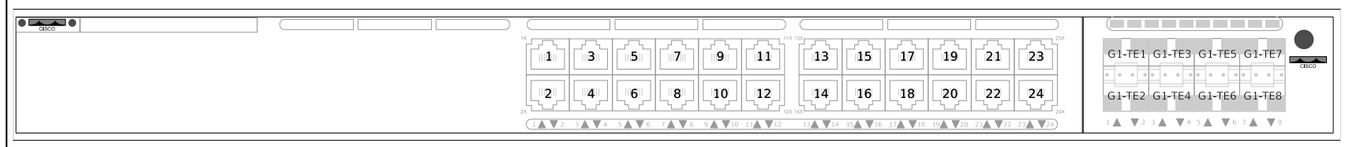

PORT NUMBER	PORT ASSIGNMENT	PORT NUMBER	PORT ASSIGNMENT	PORT NUMBER	PORT ASSIGNMENT	PORT NUMBER	PORT ASSIGNMENT
TENGIGABITETHERNET1/1/1	PRIMARY N/E LAYER 3 UPLINK	GI1/0/1	TECH ACCESS	GI1/0/9	RESERVED - IT DEVICE - TBD	GI1/0/17	OPEN
TENGIGABITETHERNET1/1/2	SECONDARY N/E LAYER 2 UPLINK	GI1/0/2	RESERVED - IT DEVICE - TBD	GI1/0/10	RESERVED - IT DEVICE - TBD	GI1/0/18	OPEN
TENGIGABITETHERNET1/1/3	N/E LAYER 2 - CAMERA AND VDS	GI1/0/3	RESERVED - IT DEVICE - TBD	GI1/0/11	OPEN	GI1/0/19	OPEN
TENGIGABITETHERNET1/1/4	N/E LAYER 2 - ATM/DMS	GI1/0/4	RESERVED - IT DEVICE - TBD	GI1/0/12	OPEN	GI1/0/20	OPEN
TENGIGABITETHERNET1/1/5	N/E LAYER 2 - VWIM	GI1/0/5	RESERVED - IT DEVICE - TBD	GI1/0/13	OPEN	GI1/0/21	OPEN
TENGIGABITETHERNET1/1/6	FUTURE/TBD	GI1/0/6	RESERVED - IT DEVICE - TBD	GI1/0/14	OPEN	GI1/0/22	OPEN
TENGIGABITETHERNET1/1/7	FUTURE/TBD	GI1/0/7	RESERVED - IT DEVICE - TBD	GI1/0/15	OPEN	GI1/0/23	OPEN
TENGIGABITETHERNET1/1/8	SECONDARY N/E TO S/W LAYER 3 UPLINK	GI1/0/8	RESERVED - IT DEVICE - TBD	GI1/0/16	OPEN	GI1/0/24	OPEN

CISCO ETHERNET SWITCH
10/100/1000 SFP PORT ARRANGEMENT

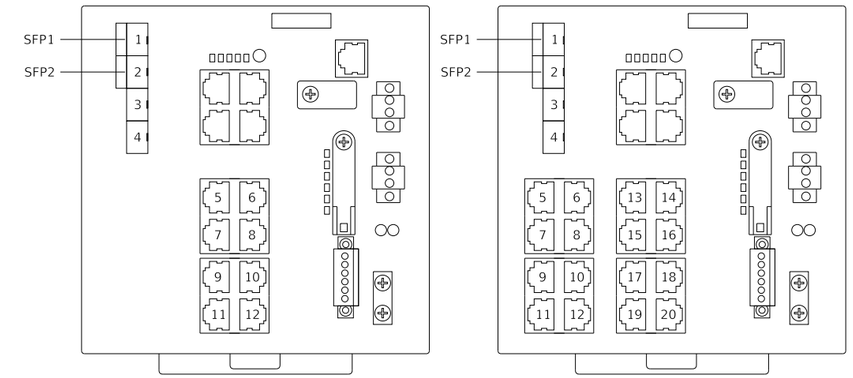

PORT NUMBER	12 PORT SWITCH (CCTV/VDS/DMS) PORT ASSIGNMENT	12 PORT SWITCH (VWIM) PORT ASSIGNMENT	20 PORT SWITCH (CCTV/VDS/DMS) *(SEE NOTE 3)* PORT ASSIGNMENT	20 PORT SWITCH (FULL ATM/GANTRY) PORT ASSIGNMENT
GI1/1	UPLINK/DOWNLINK	UPLINK/DOWNLINK	UPLINK/DOWNLINK	UPLINK/DOWNLINK
GI1/2	UPLINK/DOWNLINK	UPLINK/DOWNLINK	UPLINK/DOWNLINK	UPLINK/DOWNLINK
GI1/3	RESERVED	RESERVED	RESERVED	RESERVED
GI1/4	RESERVED	RESERVED	RESERVED	RESERVED
GI1/5	TECH ACCESS	VWIM CONTROLLER	TECH ACCESS	TECH ACCESS
GI1/6	CAMERA #1	VWIM VIRTUAL WEB SERVER	MODEM (IF INSTALLED)	WEST/SOUTH - ATM LCS CONTROLLER #1
GI1/7	CAMERA #2	CAMERA #1	DMS	WEST/SOUTH - ATM LCS CONTROLLER #2
GI1/8	SENSYS AP	CAMERA #2	VWIM	WEST/SOUTH - ATM LCS CONTROLLER #3
GI1/9	DMS CONTROLLER	IP RELAY	RESERVED	WEST/SOUTH - ATM LCS CONTROLLER #4
GI1/10	MVDS #1	UPS	RESERVED	WEST/SOUTH - ATM LCS CONTROLLER #5
GI1/11	MVDS #2/UPS	TECH ACCESS	UPS	WEST/SOUTH - ATM LCS CONTROLLER #6
GI1/12	IP RELAY	TECH ACCESS	IP RELAY	WEST/SOUTH - ATM LCS CONTROLLER SHOULDER
GI1/13	N/A	N/A	CAMERA #1	IP RELAY
GI1/14	N/A	N/A	CAMERA #2	EAST/NORTH - ATM LCS CONTROLLER #1
GI1/15	N/A	N/A	RESERVED	EAST/NORTH - ATM LCS CONTROLLER #2
GI1/16	N/A	N/A	RESERVED	EAST/NORTH - ATM LCS CONTROLLER #3
GI1/17	N/A	N/A	MVDS #1	EAST/NORTH - ATM LCS CONTROLLER #4
GI1/18	N/A	N/A	MVDS #2	EAST/NORTH - ATM LCS CONTROLLER #5
GI1/19	N/A	N/A	MVDS #3	EAST/NORTH - ATM LCS CONTROLLER #6
GI1/20	N/A	N/A	SENSYS AP	EAST/NORTH - ATM LCS CONTROLLER SHOULDER

CISCO EXPANSION SWITCH
10/100/1000 ETHERNET AND 10G SFP PORT ARRANGEMENT

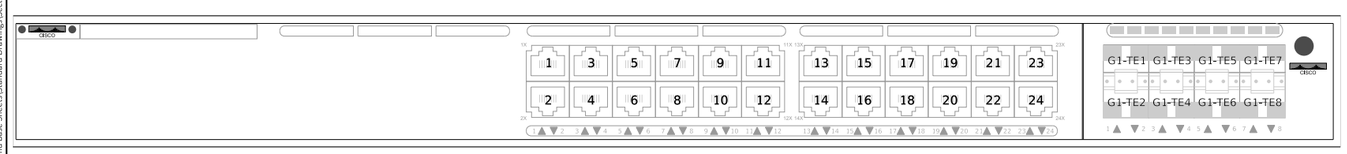

PORT NUMBER	PORT ASSIGNMENT	PORT NUMBER	PORT ASSIGNMENT	PORT NUMBER	PORT ASSIGNMENT	PORT NUMBER	PORT ASSIGNMENT
TENGIGABITETHERNET1/1/1	PRIMARY S/W LAYER 3 UPLINK	GI1/0/1	TECH ACCESS	GI1/0/9	RESERVED - ITS DEVICE - TBD	GI1/0/17	OPEN
TENGIGABITETHERNET1/1/2	SECONDARY S/W LAYER 2 UPLINK	GI1/0/2	RESERVED - ITS DEVICE - TBD	GI1/0/10	RESERVED - ITS DEVICE - TBD	GI1/0/18	OPEN
TENGIGABITETHERNET1/1/3	S/W LAYER 2 - CAMERA AND VDS	GI1/0/3	RESERVED - ITS DEVICE - TBD	GI1/0/11	OPEN	GI1/0/19	OPEN
TENGIGABITETHERNET1/1/4	S/W LAYER 2 - ATM/DMS	GI1/0/4	RESERVED - ITS DEVICE - TBD	GI1/0/12	OPEN	GI1/0/20	OPEN
TENGIGABITETHERNET1/1/5	S/W LAYER 2 - VWIM	GI1/0/5	RESERVED - ITS DEVICE - TBD	GI1/0/13	OPEN	GI1/0/21	OPEN
TENGIGABITETHERNET1/1/6	FUTURE/TBD	GI1/0/6	RESERVED - ITS DEVICE - TBD	GI1/0/14	OPEN	GI1/0/22	OPEN
TENGIGABITETHERNET1/1/7	FUTURE/TBD	GI1/0/7	RESERVED - ITS DEVICE - TBD	GI1/0/15	OPEN	GI1/0/23	OPEN
TENGIGABITETHERNET1/1/8	SECONDARY S/W TO N/E LAYER 3 UPLINK	GI1/0/8	RESERVED - ITS DEVICE - TBD	GI1/0/16	OPEN	GI1/0/24	OPEN

NOTES:

1. SEE SHEET 1 OF 3 FOR NOTES.
2. ALL NETWORK SWITCH FIBER CONNECTIONS SHOWN ON THIS SHEET SHALL BE PERFORMED BY THE TOLLWAY FIBER MAINTENANCE TEAM, IN COORDINATION WITH THE ENGINEER.
3. PORT ASSIGNMENT INCLUDED FOR REFERENCE FOR EXISTING ITS SITES WITH 20 PORT SWITCH.
4. THE CONTRACTOR SHALL MAKE LOCAL/COPPER CAT-6 CONNECTIONS PER THE PORT ASSIGNMENTS SHOWN ON THIS SHEET, OR AS DIRECTED BY THE ENGINEER. THE ENGINEER SHALL VERIFY CORRECT PORT CONNECTIONS HAVE BEEN MADE DURING SITE TESTING.

APPROVED BY: Paul Kovacs
CHIEF ENGINEERING OFFICER
DATE: 02/17/2019

Illinois Tollway

FIBER OPTIC SPLICING DETAILS

VERSION:	STANDARD:	SHEET:
2022-03	L2-03	2 OF 2

PLOT DRIVER: c:\bmc\wsp-pb-us-pw-02\bc_brad.hoder\d0316135\pdf.ilt\Tollway.pltcfg
PENTABLE: c:\bmc\wsp-pb-us-pw-02\bc_brad.hoder\d0296440\Tables\Pen\Black\White.tbl\Tollway.TBL
PLOT DATE: 3/1/2023 PLOT TIME: 10:35:31 AM
PLOTTED BY: brad.hoder
MODEL NAME: PROPOSED NETWORK SWITCH PORT ASSIGNMENT SCHEMATIC
FILE NAME: pw:\\wsp-us-pw.bentley.com:wsp-us-pw-02\Documents\Illinois Tollway GEG (0976RR)\Standard Drawings and Base Sheets\Standard Drawings\Section - L\L2-03.dgn
PLOT SCALE: 0.1667 ' / in. PAGE SIZE: 17x11 (in.)