Illinois Tollway Standard Drawing Revisions

Section C	Guardrail & Concrete Barrier	
	Standard	**Modification Summary** **Effective: 03-01-2022**
	C3-09	**CONCRETE BARRIER SINGLE FACE, REINFORCED TL-4, 44 INCH**
	Sheet 1	Added hot-poured joint sealer call out to Section B-B. Added note #9 on fill behind backside of barrier base.
	C4-11	**CONCRETE SHOULDER BARRIER TRANSITION, TYPE V-SF**
	Sheet 1	Revised Note 4 describing how contraction joints shall be formed.
	C13-07	**CONCRETE MEDIAN BARRIER TRANSITION, TYPE V-DF AT BRIDGE PIERS**
	Sheet 2	Revised hot-poured joint sealer call out on Section A-A.
	C15-02	**CONCRETE BARRIER SINGLE FACE, REINFORCED TL-5, T-SHAPE 44 INCH**
	Sheet 1	Added hot-poured joint sealer call out to Section B-B. Added note #9 on fill behind backside of barrier base.
	C16-02	**CONCRETE BARRIER SINGLE FACE, REINFORCED TL-5, L-SHAPE 44 INCH**
	Sheet 1	Added hot-poured joint sealer call out to Section B-B. Added note #9 on fill behind backside of barrier base.
	C17-03	**CONCRETE BARRIER SINGLE FACE, REINFORCED TL-5, 54 INCH**
	Sheet 1	Added hot-poured joint sealer call out to Section B-B. Added note #9 on fill behind backside of barrier base.
	C18-02	**CONCRETE SHOULDER BARRIER HEIGHT TRANSITION, SINGLE FACE, TYPE SF-54**
	Sheet 1	Updated Note 1 to say IL TOLLWAY STRUCTURE DESIGN MANUAL.

New Sheet

Retired Standard

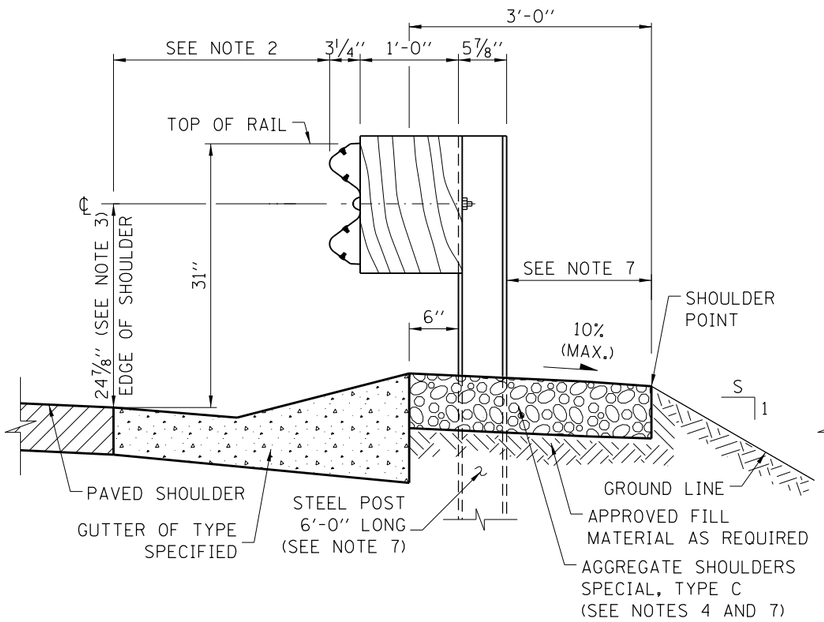

FILL SECTION WITH GUTTER

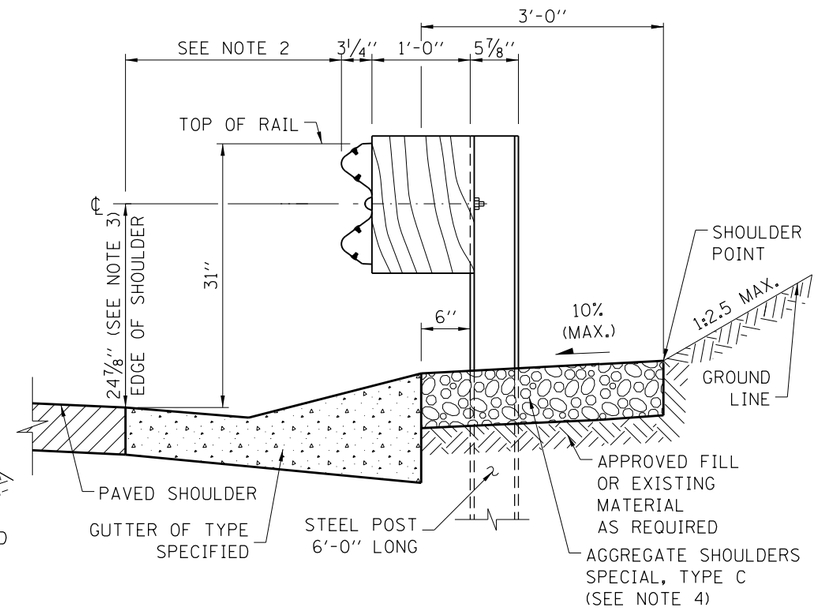

CUT SECTION WITH GUTTER

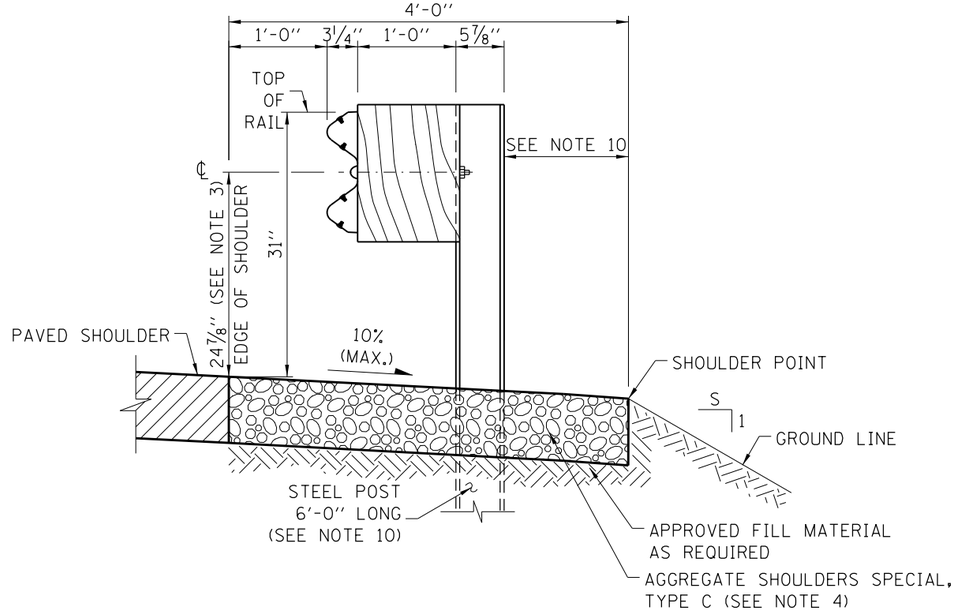

SECTION WITHOUT GUTTER

GUARDRAIL INSTALLATION DETAILS

NOTES:

1. 1'-0" OFFSET FROM EDGE OF PAVED SHOULDER TO FACE OF RAIL IS TYPICAL FOR ALL INSTALLATIONS WITHOUT GUTTER EXCEPT AS OTHERWISE DETAILED IN THE PLAN DRAWINGS.
2. WHERE GUTTERS SUCH AS TYPE G-2, G-3 ARE REQUIRED IN FRONT OF THE GUARDRAIL, THE POSTS SHALL BE LOCATED 6" BEHIND THE GUTTER, OR AS OTHERWISE DETAILED IN THE PLANS. THE OFFSET FROM THE EDGE OF SHOULDER TO THE FACE OF THE GUARDRAIL SHALL BE AS SHOWN ON STANDARD B28.
3. THE 24⅞" TYPICAL RAIL HEIGHT IS MEASURED FROM EXISTING SURFACE 1'-0" IN FRONT OF RAIL, OR FROM EDGE OF SHOULDER/EDGE OF GUTTER WHEN EDGE IS MORE THAN 1'-0" IN FRONT OF RAIL TO CENTER OF RAIL.
4. WHERE GUTTER IS PROPOSED WITH GUARDRAIL, A 6" MINIMUM THICKNESS OF AGGREGATE SHOULDERS SPECIAL, TYPE C SHALL BE PLACED BEHIND GUTTER. FOR GUARDRAIL WITHOUT GUTTER, AGGREGATE SHOULDER, TYPE C, OF THE SAME THICKNESS AS PAVED SHOULDER SHALL BE PLACED FROM THE EDGE OF PAVED SHOULDER SLOPING AWAY TO A 6" MIN. THICKNESS.
5. GUARDRAIL POSTS SHALL NOT BE ATTACHED TO ANY STRUCTURE.
6. PLASTIC BLOCK-OUTS SHALL NOT BE ALLOWED AS A SUBSTITUTE FOR WOOD BLOCK-OUTS ON NEW INSTALLATIONS.
7. WHEN S IS LESS THAN OR EQUAL TO 3 AND 3'-0" AGGREGATE SHOULDER WIDTH CANNOT BE MET, THE POST LENGTH SHALL BE 9'-0" AND THE AGGREGATE SHOULDER WIDTH SHALL BE 1'-0" MIN. BEHIND THE POST TO THE SHOULDER POINT.
8. ALL SLOPES ARE EXPRESSED AS UNITS OF VERTICAL DISPLACEMENT TO UNITS OF HORIZONTAL DISPLACEMENTS (V:H).
9. UNDER NO CIRCUMSTANCES SHALL AN EXISTING GUARDRAIL, THAT WAS DESIGNED USING A PREVIOUS STANDARD, BE EXTENDED, ATTACHED TO OR MODIFIED IN ANYWAY FROM ITS ORIGINAL DESIGN. IF ANY MODIFICATION IS REQUIRED AND A PROPER BARRIER WARRANT HAS BEEN COMPLETED, THE ENTIRE BARRIER INSTALLATION SHALL BE COMPLETELY REMOVED AND REPLACED WITH A NEW SYSTEM THAT CONFORMS TO THE CURRENT STANDARD.
10. WHEN S IS LESS THAN OR EQUAL TO 3, THE POST LENGTH SHALL BE 9'-0" AND 4'-0" AGGREGATE SHOULDER WIDTH MAINTAINED.
11. THE MGS GUARDRAIL SYSTEM WITH STANDARD POST SPACING HAS BEEN PERFORMANCE-TESTED FOR TL-3 CRASH WORTHINESS UNDER PROCEDURES DEFINED IN THE AASHTO MANUAL FOR ASSESSING SAFETY HARDWARE (MASH). OTHER VARIATIONS OF THE MGS GUARDRAIL SYSTEM HAVE BEEN PERFORMANCE-TESTED FOR TL-3 CRASH WORTHINESS UNDER PROCEDURES OUTLINED IN THE NATIONAL COOPERATIVE HIGHWAY RESEARCH PROGRAM (NCHRP) REPORT 350. NO MODIFICATION TO THIS STANDARD DRAWING SHALL BE PERMITTED.
12. GUARDRAIL POSTS SHALL NOT BE INSTALLED IN CONCRETE OR ASPHALT PAVEMENT. WHEN NECESSARY USE LEAVE-OUT DETAIL ON SHEET 3 OF 4 OF THIS SERIES.

DATE	REVISIONS
03-01-21	CHANGED DRAINAGE CONFLICTS TO OMITTED POST, SHEET 4
03-01-20	MODIFIED NOTE 11 AND HEADING OF TABLE 2B
03-01-18	CORRECTED NOTES, ADDED TABLES 2A AND 2B.
03-31-17	REVISED NOTES
03-31-16	ADDED SECTION, REV'D SHLDR

Illinois Tollway

GALVANIZED STEEL PLATE BEAM GUARDRAIL

STANDARD C1-12

APPROVED Paul Kovacs DATE 5-1-2009
CHIEF ENGINEERING OFFICER

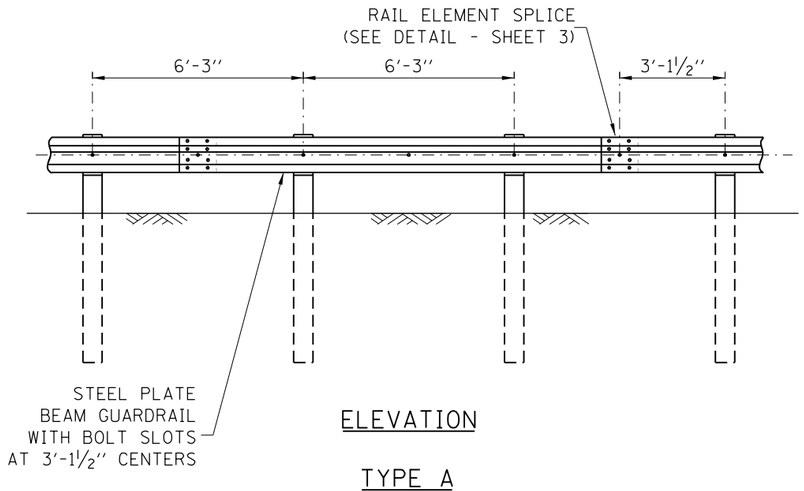

ELEVATION

TYPE A

6'-3" TYPICAL POST SPACING

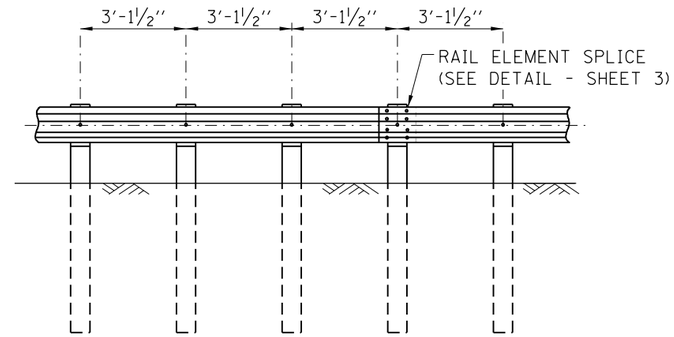

ELEVATION

TYPE B

3'-1½" ½ POST SPACING

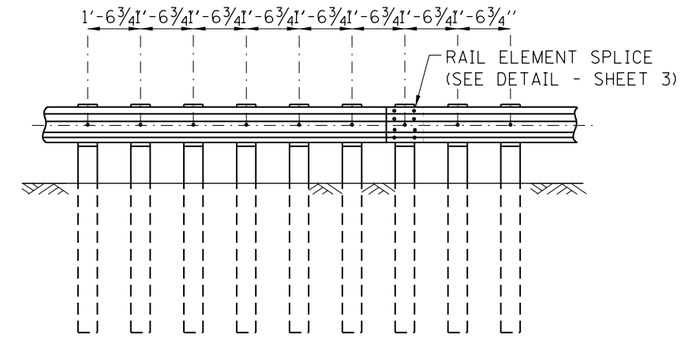

ELEVATION

TYPE C

1'-6¾" ¼ POST SPACING

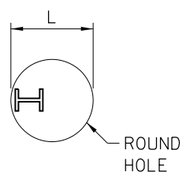

PLAN

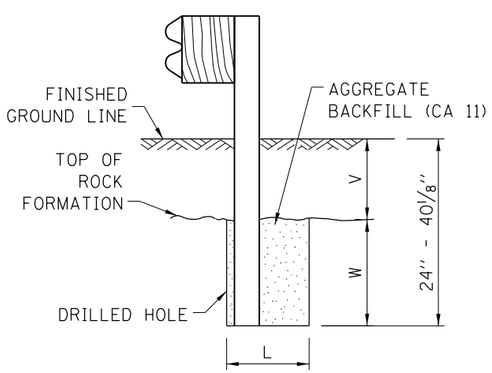

ELEVATION

FOOTING FOR POST WHEN ROCK FORMATION IS ENCOUNTERED

TABLE 1		
V	W	L
0 - 16⅛"	24"	21"
> 16⅛" - 28⅛"	12"	8"
> 28⅛" - 40⅛"	12" - 0 (*)	8"

* V + W = 40⅛"

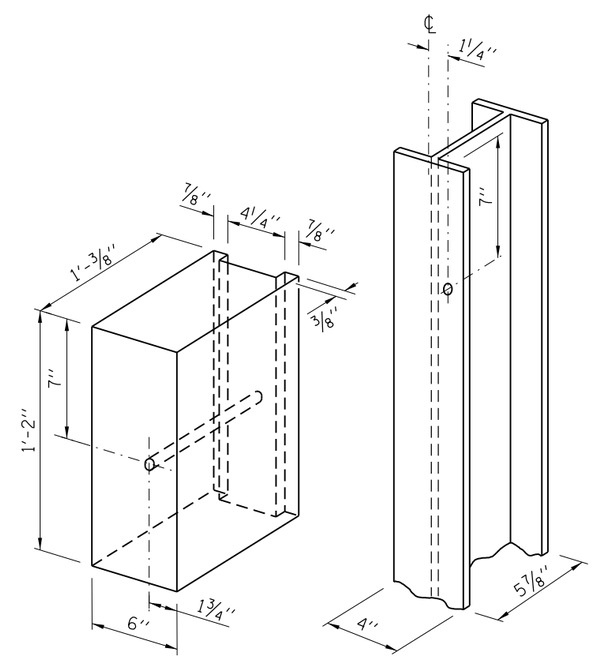

NOTES:

ALL HOLES 3/4" DIA.

WOOD BLOCK-OUT AND STEEL POST DETAILS

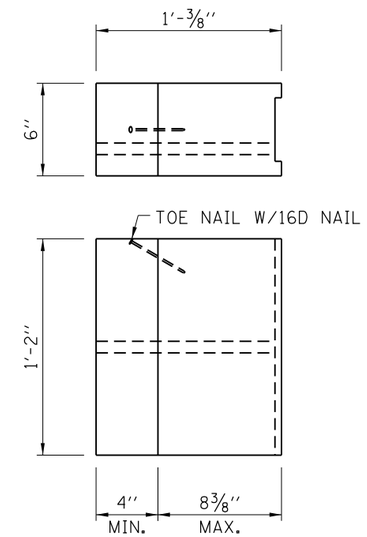

TWO-PIECE WOOD BLOCK-OUT OPTION

SHEET 2 OF 4

Illinois Tollway

GALVANIZED STEEL PLATE BEAM GUARDRAIL

STANDARD C1-12

Paul Kovacs

APPROVED. . . . . DATE 5-1-2009

CHIEF ENGINEERING OFFICER

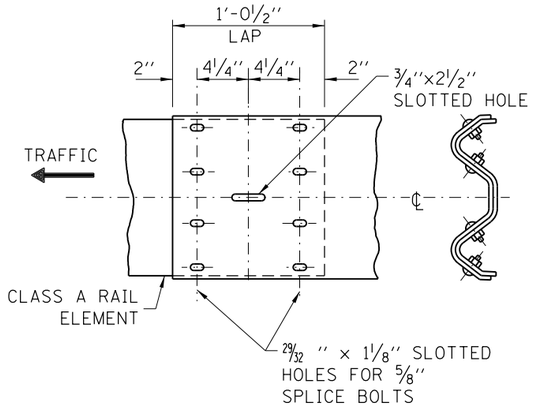

RAIL ELEMENT SPLICE

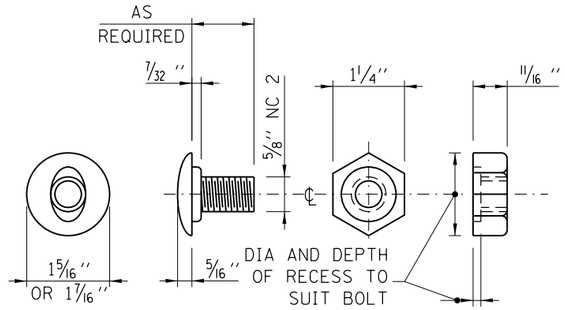

POST OR SPLICE BOLT & NUT

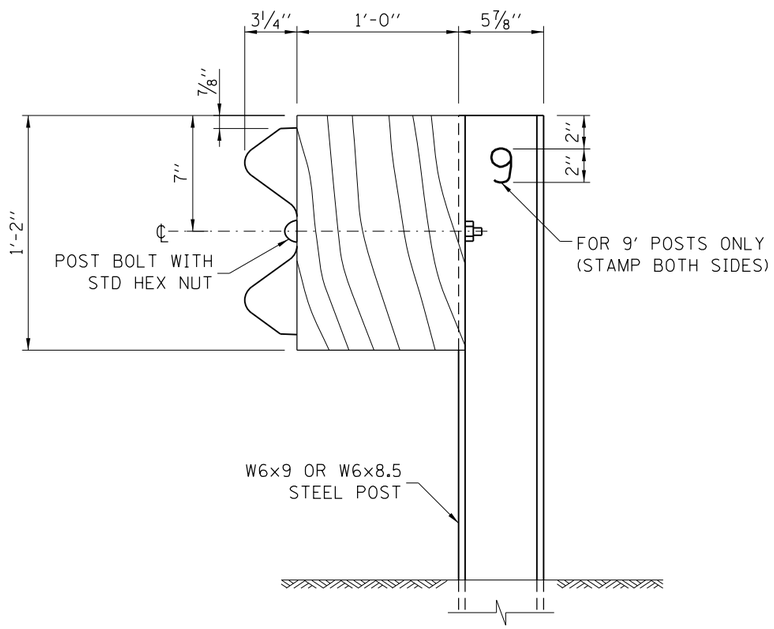

STEEL POST CONSTRUCTION

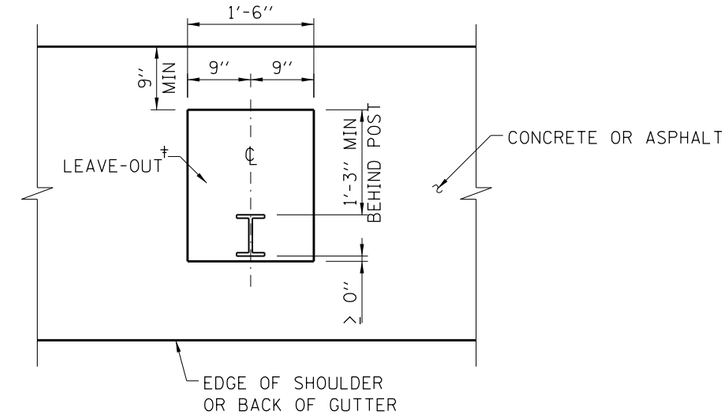

PLAN

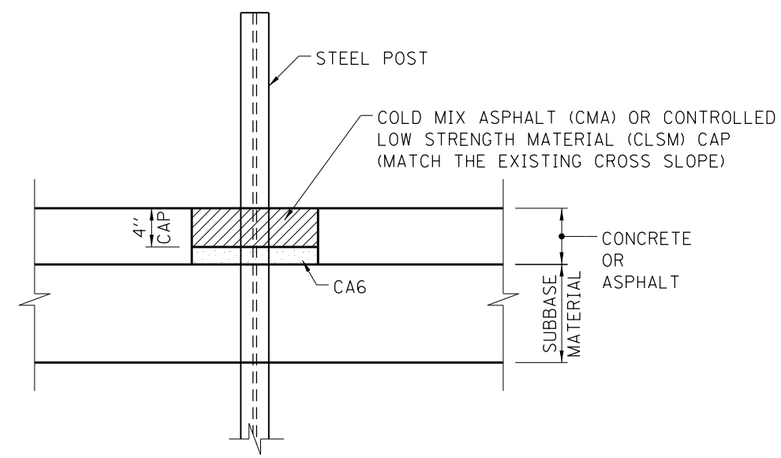

ELEVATION

LEAVE-OUTS

† THE AREA AROUND THE POST THAT IS EITHER OMITTED FROM THE NEW CONSTRUCTION OR REMOVED FROM THE EXISTING CONCRETE OR ASPHALT.

SHEET 3 OF 4

Illinois Tollway

GALVANIZED STEEL PLATE BEAM GUARDRAIL

STANDARD C1-12

Paul Kovacs
APPROVED ..... DATE 5-1-2009
CHIEF ENGINEERING OFFICER

TABLE 2A BARRIER CLEARANCE DISTANCE (MGS) NEW CONSTRUCTION/RECONSTRUCTION		
GUARDRAIL SYSTEM	POST SPACING	MINIMUM DISTANCE
TYPE A	6′-3″	39″
TYPE B ½ POST SPACING	3′-1 ½″	34″
TYPE C ¼ POST SPACING	1′-6 ¾″	26″

TABLE 2B BARRIER CLEARANCE DISTANCE (MGS) REHABILITATION				
		MINIMUM DISTANCE		
			ALL OTHER OBSTACLES	
GUARDRAIL SYSTEM	POST SPACING	EXISTING BREAKAWAY LIGHT POLES	EXISTING GUARDRAIL	ALL NEW GUARDRAIL
TYPE A	6′-3″	20″	28″	39″
TYPE B ½ POST SPACING	3′-1 ½″	N/A	23″	34″
TYPE C ¼ POST SPACING	1′-6 ¾″	N/A	14″	26″

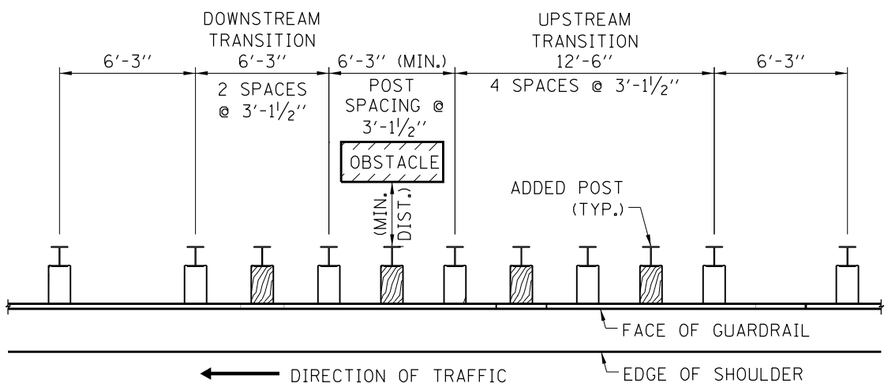

TRANSITION TO ½-POST SPACING

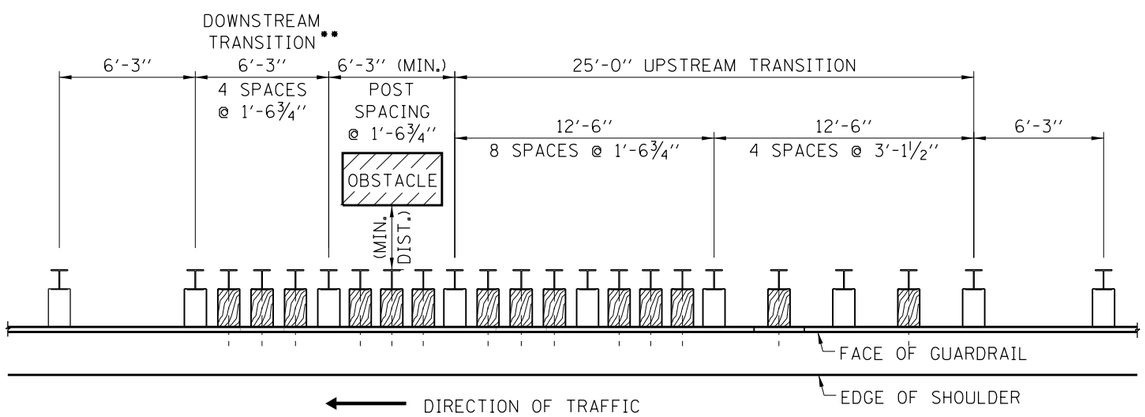

TRANSITION TO ¼-POST SPACING

** WHEN LENGTH OF OBSTACLES IS 1′-3″ OR LESS, THE DOWNSTREAM TRANSITION SHALL BE OMITTED.

POST SPACING TRANSITIONS

NOTE: NO MODIFICATIONS OF ANY KIND TO THE TRANSITION POST SPACING ARE ALLOWED.

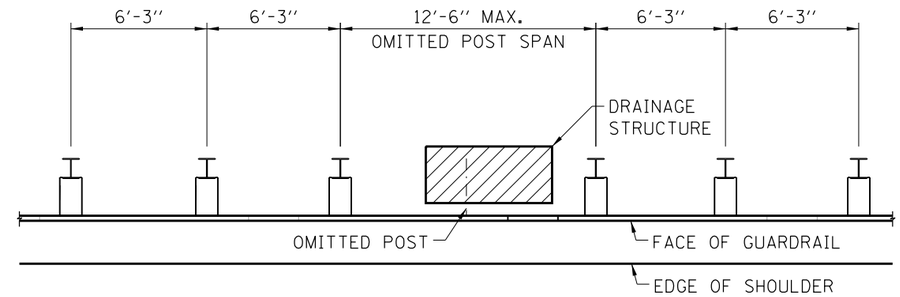

TYPE A GUARDRAIL-DRAINAGE STRUCTURE CONFLICT
ONE POST OMITTED

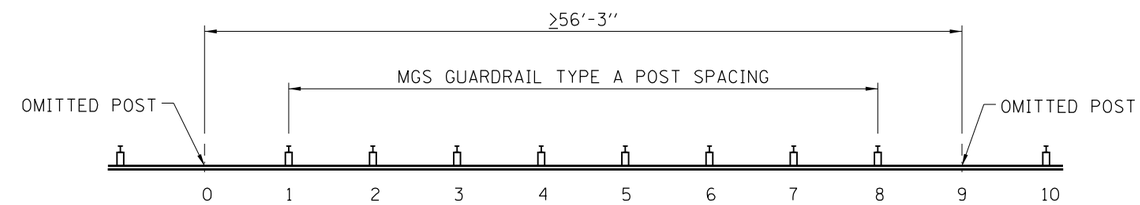

MINIMUM ALLOWED DISTANCE BETWEEN OMITTED POSTS

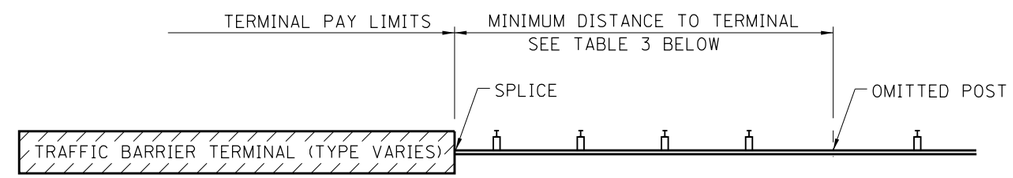

MINIMUM DISTANCE TO TERMINAL FROM OMITTED POST

NOTES:

A. THE OMISSION OF A SINGLE SUPPORT POST WITHIN THE GUARDRAIL SPAN IS PERMITTED WHEN A CONFLICT EXISTS. THE MINIMUM DISTANCE BETWEEN TWO OMITTED POSTS IS 56′-3″.

B. GUARDRAIL POSTS SHALL NOT BE SET BACK TO AVOID CONFLICTS WITH A DRAINAGE SUBSURFACE UTILITY.

C. THIS DETAIL ALSO APPLIES TO OTHER UNDERGROUND CONFLICTS.

D. THE OMISSION OF A SUPPORT POST IS NOT PERMITTED WITHIN A GUARDRAIL INSTALLATION WITH GUTTER.

TABLE 3 MINIMUM DISTANCE FROM OMITTED POST TO TERMINAL LIMIT	
TRAFFIC BARRIER TERMINAL	MIN. DISTANCE
TBT TYPE T1 (SP) OR TBT TYPE T1-A (SP)	15′-7½″
TBT TYPE T6 OR TBT TYPE T6B	28′-1½″
TBT TYPE T2	53′-1½″

Illinois Tollway

GALVANIZED STEEL PLATE BEAM GUARDRAIL

STANDARD C1-12

APPROVED Paul Kovacs CHIEF ENGINEERING OFFICER DATE 5-1-2009

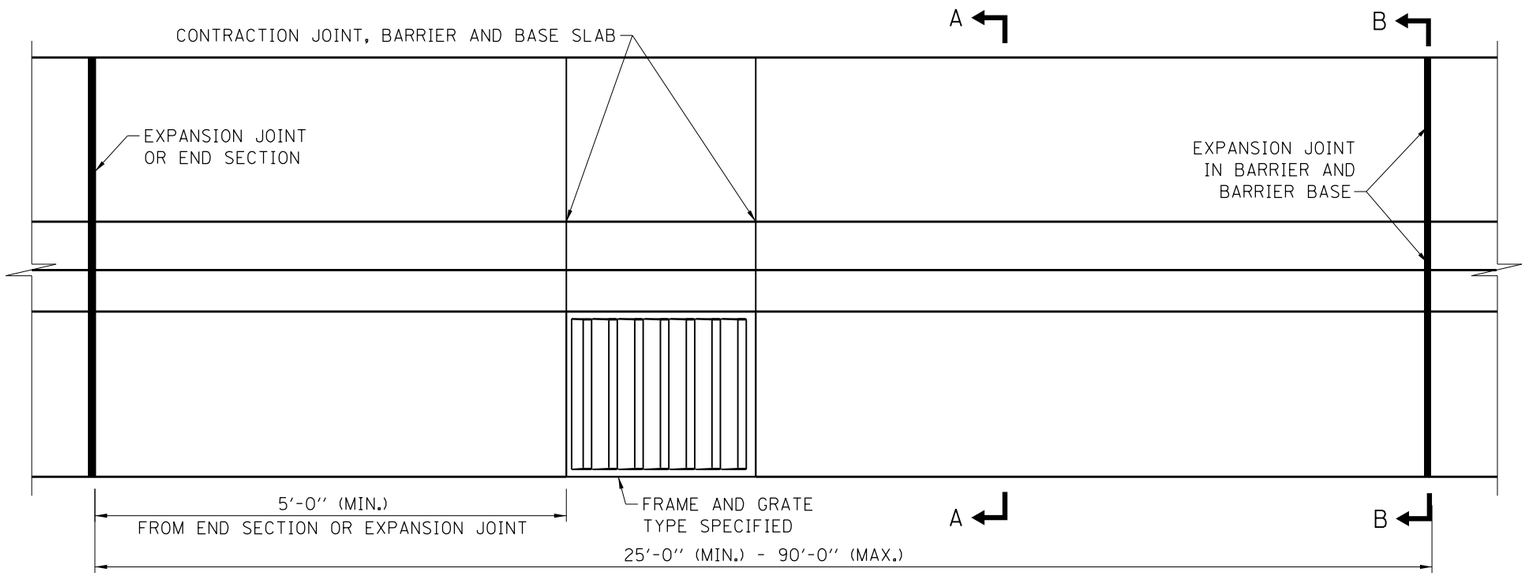

PLAN

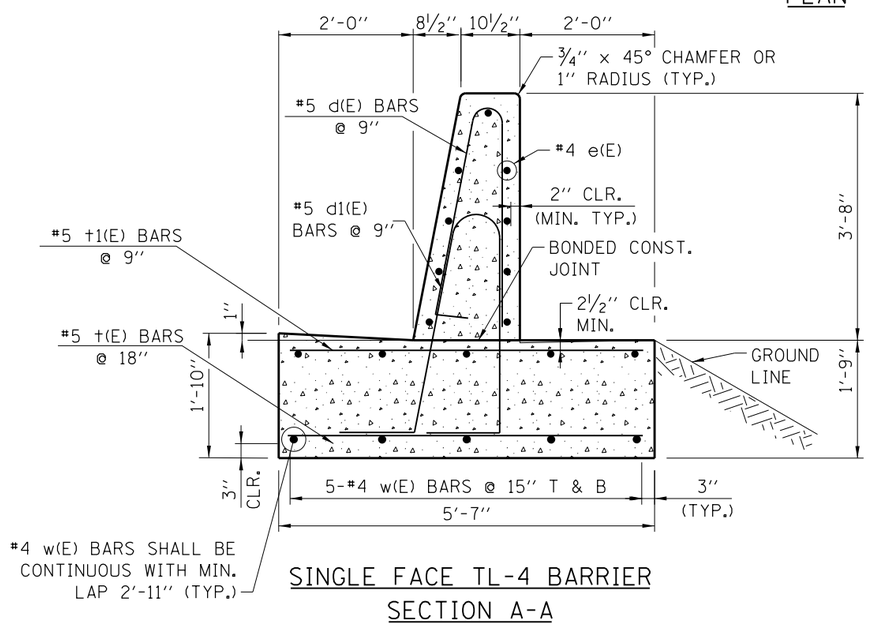

SINGLE FACE TL-4 BARRIER
SECTION A-A

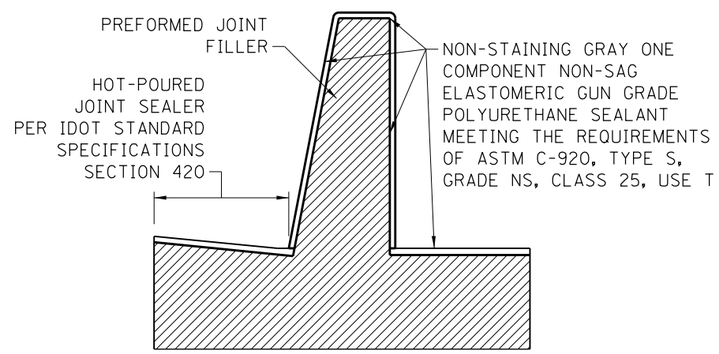

SINGLE FACE TL-4 BARRIER
EXPANSION JOINT
SECTION B-B

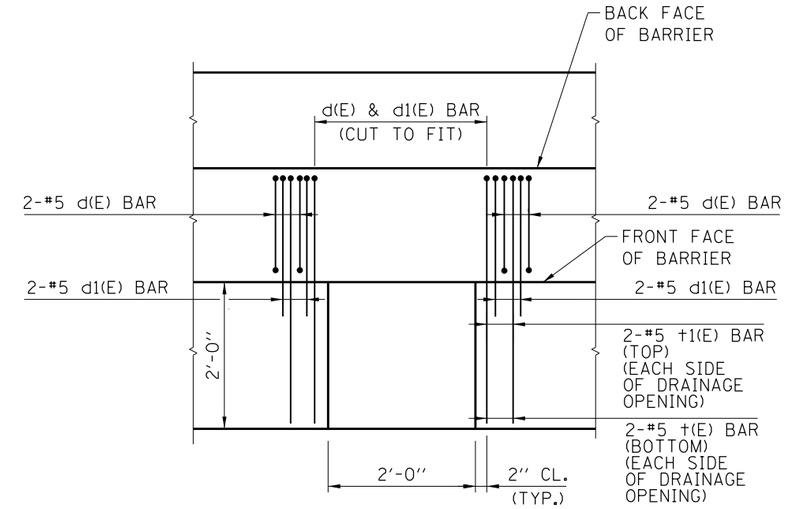

PLAN
REINFORCEMENT AROUND DRAINAGE STRUCTURE

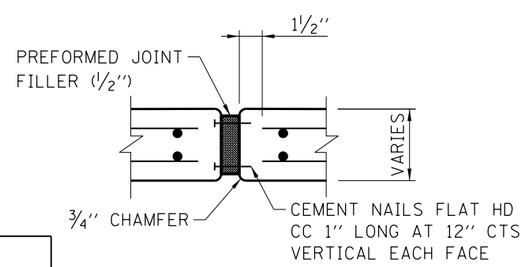

EXPANSION JOINT

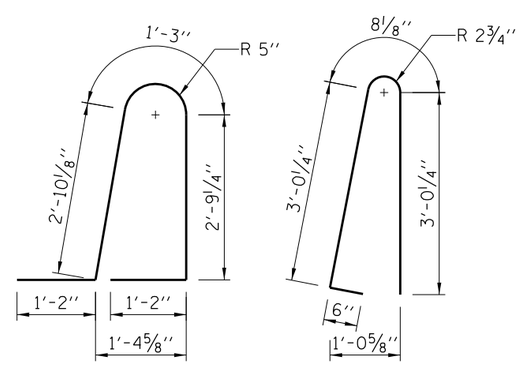

BAR d1(E) BAR d(E)

BENDING DIAGRAMS

NOTES:

1. THIS IS A REINFORCED CONCRETE TL-4 ROADSIDE BARRIER USED TO SHIELD ROADWAY APPURTENANCES. THE MINIMUM LENGTH OF INSTALLATION SHALL BE 25'-0". BASIS OF DESIGN: IL TOLLWAY STRUCTURE DESIGN MANUAL.
2. TOP SHOULDER EDGE OF BARRIER BASE GUTTER SHALL MATCH THE TOP OF SHOULDER ELEVATION.
3. 1" DEEP CONTRACTION JOINTS SHALL BE CONSTRUCTED IN BOTH THE REINFORCED CONCRETE BARRIER WALL AND BASE. CONTRACTION JOINTS SHALL ALSO BE CONSTRUCTED AT BOTH SIDES OF ALL DRAINAGE STRUCTURES. MAXIMUM CONTRACTION JOINT SPACING SHALL BE 30'-0".
4. CONTRACTION JOINTS SHALL BE FORMED BY A GROOVE ⅛", EITHER FORMED IN THE PLASTIC CONCRETE OR SAWED AFTER THE CONCRETE HAS SET.
5. REINFORCEMENT BARS DESIGNATED "(E)" SHALL BE EPOXY COATED.
6. REINFORCEMENT BARS BENDING DETAILS SHALL BE IN ACCORDANCE WITH THE "MANUAL OF STANDARD PRACTICE FOR DETAILING REINFORCED CONCRETE STRUCTURES", ACI 315, LATEST EDITION. REINFORCEMENT BAR BENDING DIMENSIONS ARE OUT TO OUT.
7. AT DRAINAGE STRUCTURES, CUT FOOTING BARS TO FIT. ADD AN ADDITIONAL PAIR OF d, d1, †, AND †1 BARS ON EACH SIDE OF THE DRAINAGE STRUCTURE.
8. EXPANSION JOINTS SHALL BE CONSTRUCTED IN BARRIER WALL AT A MAXIMUM JOINT SPACING OF 90'-0" AND A MINIMUM JOINT SPACING OF 25'-0". SEE SECTION B-B FOR DETAILS.
9. WHEN SPECIFIED IN THE PLANS, THE BACKSIDE OF THE BARRIER BASE MAY BE LEFT EXPOSED A MAXIMUM OF 1', MEASURED FROM THE TOP OF THE BARRIER BASE.

DATE	REVISIONS
3-01-2022	REVISED CALLOUTS AND NOTES
3-01-2020	REVISED TO 44" HEIGHT & RENAMED
3-01-2019	REVISED TO CONSTANT SLOPE
3-31-2016	ADDED MAX. EXPOSED BASE,
	REVISED EXP. JT. NOTE
3-11-2015	REVISED BENDING DIAGRAM
03-31-14	REDESIGNED FOR TL-4 LOADING
10-01-13	REVISED REINFORCEMENT
	BARS AND GUTTER WIDTH

Illinois Tollway

CONCRETE BARRIER SINGLE FACE, REINFORCED TL-4, 44 INCH

STANDARD C3-09

APPROVED Paul Kovacs
CHIEF ENGINEERING OFFICER
DATE 2-7-2012

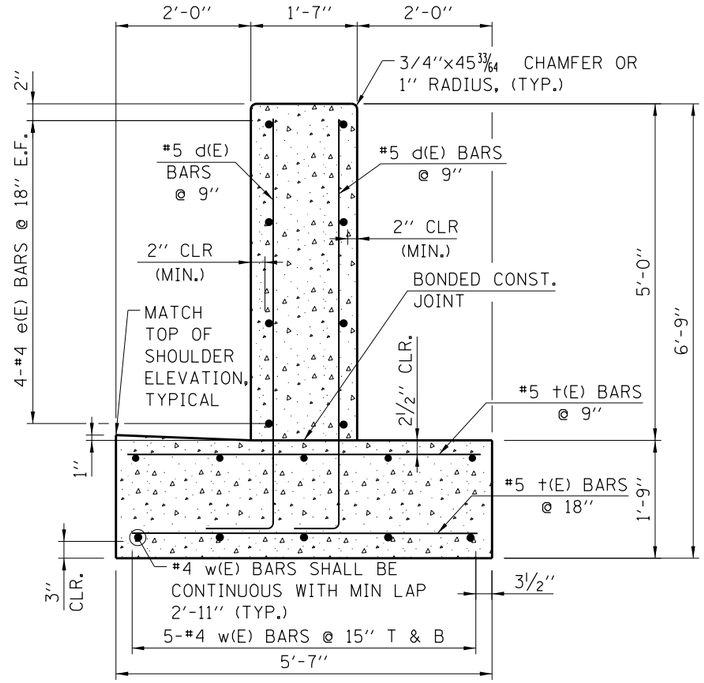

SECTION C-C

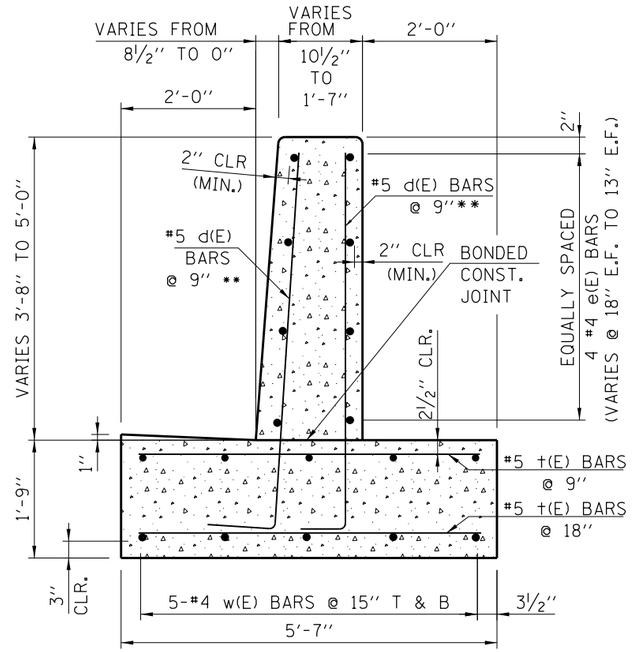

SECTION B-B

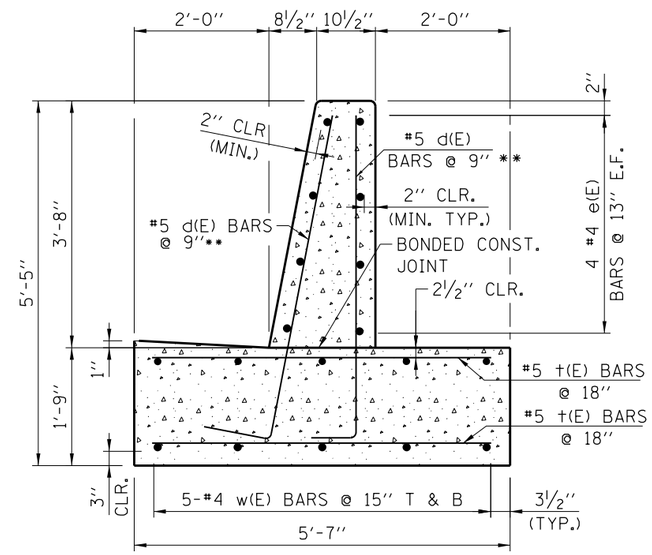

SECTION A-A

** CUT TO FIT IN FIELD
2" MIN. VERTICAL CLR.

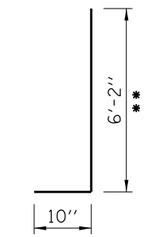

#5 d(E) BAR

BENDING DIAGRAM

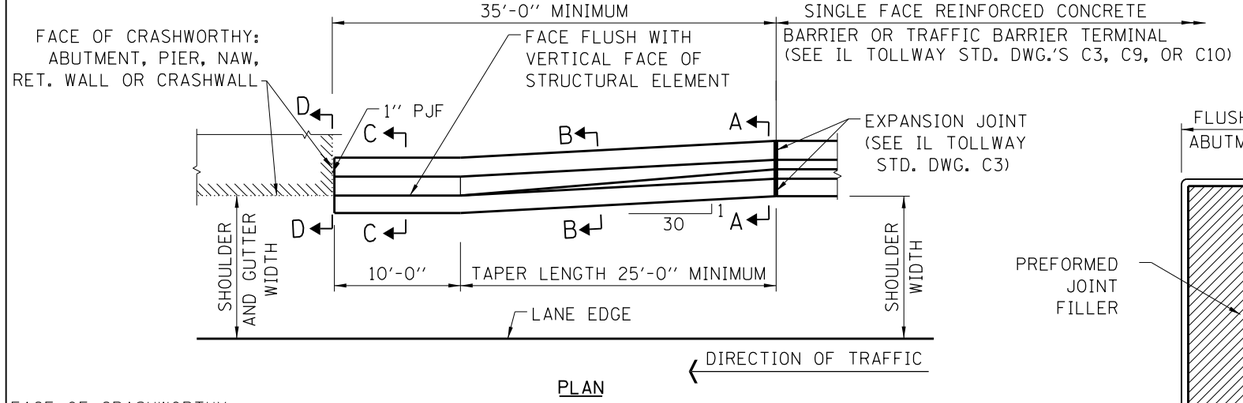

PLAN

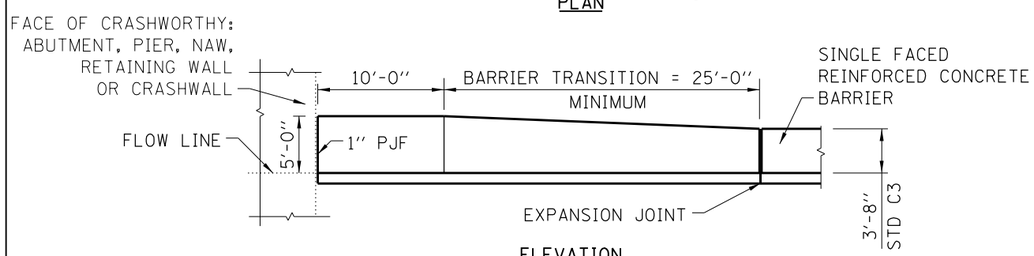

ELEVATION

CONCRETE SHOULDER BARRIER TRANSITION, V-SF

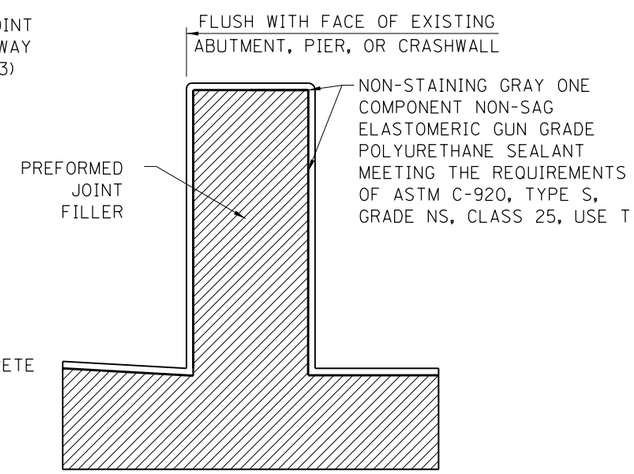

SECTION D-D

NOTES:

1. TAPER LENGTH REQUIRED FOR THE SHOULDER WIDTH TRANSITION SHALL BE 25'-0" MINIMUM. INCREASE TAPER RATE AS REQUIRED TO OBTAIN THE LENGTH OF 25'-0".
2. TOP SHOULDER EDGE OF BARRIER BASE GUTTER SHALL MATCH THE TOP OF SHOULDER ELEVATION.
3. 1" DEEP CONTRACTION JOINTS SHALL BE CONSTRUCTED IN BOTH THE REINFORCED CONCRETE BARRIER WALL AND BASE. CONTRACTION JOINTS SHALL ALSO BE CONSTRUCTED AT BOTH SIDES OF ALL DRAINAGE STRUCTURES. MAXIMUM CONTRACTION JOINT SPACING SHALL BE 30'-0".
4. CONTRACTION JOINTS SHALL BE FORMED BY A GROOVE 1/8", EITHER IN THE PLASTIC CONCRETE OR SAWED AFTER THE CONCRETE HAS SET.
5. REINFORCEMENT BARS DESIGNATED "(E)" SHALL BE EPOXY COATED.
6. REINFORCEMENT BARS BENDING DETAILS SHALL BE IN ACCORDANCE WITH THE "MANUAL OF STANDARD PRACTICES FOR DETAILING REINFORCED CONCRETE STRUCTURES", ACI 315, LATEST EDITION.
7. REINFORCEMENT BARS BENDING DIMENSIONS ARE OUT TO OUT.
8. CONSTANT-SLOPE BARRIER SHALL BE USED WITH ALL NEW CONSTRUCTION, OR RECONSTRUCTION OF EXISTING BARRIERS.
9. E.F. DENOTES EACH FACE
10. MINIMUM EXPANSION JOINT SPACING SHALL BE 25'-0".

DATE	REVISIONS
3-01-2022	REVISED NOTE 4
3-01-2021	CLARIFIED SHLD. WIDTH AND
	REVISED NOTES IN PLAN VIEW
3-01-2020	REVISED BARRIER AND BASE
	DIMENSIONS AND REINFORCING
3-01-2019	REVISED TO CONSTANT SLOPE
	RENAMED DRAWING
3-31-2017	ADDED CALLOUT TO SEC D-D
3-31-2016	REVISED SECT. B-B TO D-D

Illinois Tollway

CONCRETE SHOULDER
BARRIER TRANSITION
TYPE V-SF

STANDARD C4-11

Paul Kovacs
APPROVED CHIEF ENGINEERING OFFICER
DATE 2-7-2012

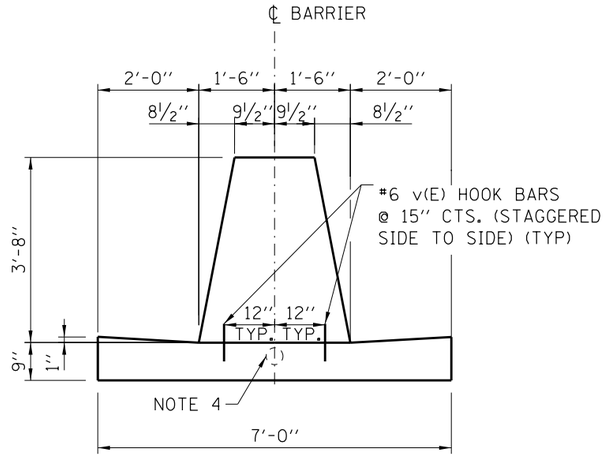

CONCRETE BARRIER, DOUBLE FACE, 44"
CONCRETE BARRIER BASE, 7'-0"

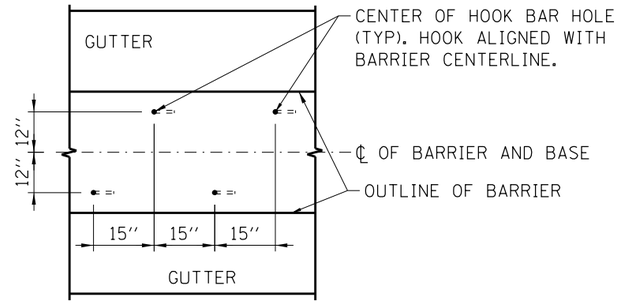

HOOK BAR PLACEMENT
(Plan View)

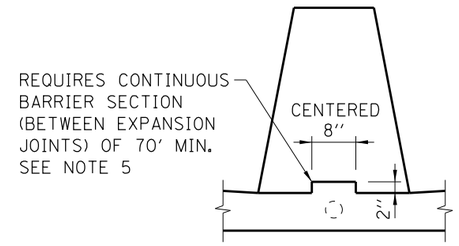

CONCRETE BARRIER BASE
WITH KEYWAY OPTION

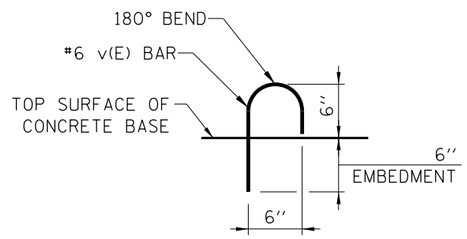

HOOK BAR
(Side View)

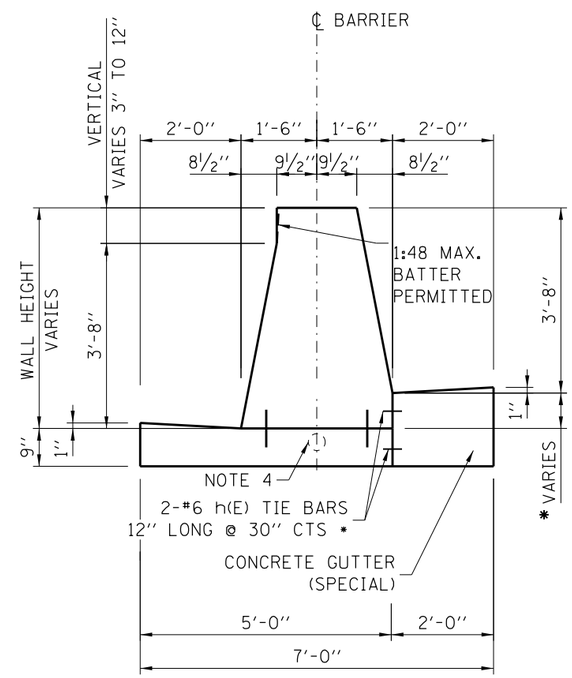

CONCRETE BARRIER, DOUBLE FACE, VARIABLE HEIGHT
CONCRETE BARRIER BASE, 5'-0"

(BARRIER HEIGHT VERTICAL DIFFERENTIAL VARIES 3" TO 12")
* WHEN 6" OR GREATER ADD TOP TIE BAR.

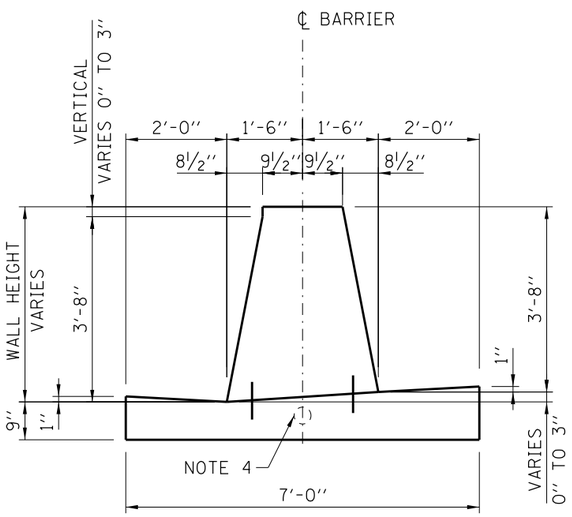

CONCRETE BARRIER, DOUBLE FACE, VARIABLE HEIGHT
CONCRETE BARRIER BASE, VARIABLE HEIGHT, 7'-0"

(BARRIER HEIGHT VERTICAL DIFFERENTIAL VARIES 0" TO 3")

NOTES:

1. 2" DEEP CONTRACTION JOINTS SHALL BE DONE BY SAWING AND SHALL BE CONSTRUCTED IN THE CONCRETE BARRIER WALL, CONCRETE BARRIER BASE, AND CONCRETE GUTTER (SPECIAL). CONTRACTION JOINTS SHALL ALSO BE CONSTRUCTED AT BOTH SIDES OF ALL DRAINAGE STRUCTURES. MAXIMUM CONTRACTION JOINT SPACING SHALL BE 30'-0". THE MINIMUM DISTANCE BETWEEN CONTRACTION JOINTS IN THE MEDIAN BARRIER WALL SHALL BE 2'-0". WHEN A DRAINAGE STRUCTURE FALLS WITHIN 2'-0" FROM AN EXPANSION JOINT (OR) CONTRACTION JOINT, THE NEAREST CONTRACTION JOINT SHALL BE OMITTED.

2. GUTTER PROFILE IN THE VICINITY OF SAG VERTICAL CURVES, ALONG FLAT GRADES AND AT THE MEETING OF PROPOSED AND EXISTING GUTTER, SHALL BE CAREFULLY CONTROLLED AND FIELD ADJUSTED IF NECESSARY TO ENSURE POSITIVE DRAINAGE AND AVOID PONDING.

3. IN AREAS OF RELATIVELY FLAT LONGITUDINAL PROFILE GRADES, THE VERTICAL DIMENSION TO THE TOP OF THE BARRIER CAN VARY (BY VARYING THE GUTTER SLOPE) FROM 43" TO 44.5" TO CREATE AN ACCEPTABLE LONGITUDINAL GRADE IN THE GUTTER.

4. REFERENCE PLAN SHEET FOR TYPE, SIZE AND NUMBER OF CONDUITS. PROVIDE 1½" (MIN.) CLEARANCE TO THE TOP OF CONDUIT AND 2" (MIN.) CLEARANCE TO THE BOTTOM OF THE CONDUIT.

5. THE CONTRACTOR HAS THE OPTION OF USING EITHER THE KEYWAY OR THE #6 HOOK BAR v(E) BETWEEN THE BARRIER AND THE BASE. WHEN THE KEYWAY IS USED, THE RAISED KEYWAY SHALL BE POURED MONOLITHIC WITH THE BARRIER BASE AND THE BARRIER SHALL HAVE A MINIMUM UNINTERRUPTED SECTION LENGTH OF 70'. IF THE KEYWAY OR ITS EDGES BECOME DAMAGED, THEN HOOK BARS SHALL BE INSTALLED WITHIN THE DAMAGED SECTION.

6. ALL BARS SHALL BE INCLUDED IN THE COST OF THE VARIOUS BARRIER AND GUTTER ITEMS. REINFORCEMENT BARS DESIGNATED '(E)' SHALL BE EPOXY COATED. TIE BARS BETWEEN THE BARRIER AND BASE SHALL BE v(E) HOOK BARS ON 15" CENTERS AND ALTERNATE LEFT AND RIGHT OF THE BARRIER CENTERLINE. TIE BARS BETWEEN EITHER THE VARIABLE HEIGHT BARRIER OR THE BASE AND THE GUTTER (SPECIAL) SHALL BE h(E) STRAIGHT BAR PAIRS ON 30" CENTERS.

7. WHEN VARIABLE HEIGHT VERTICAL DIFFERENTIAL EXCEEDS 12" SEE STRUCTURAL PLANS FOR DETAILS.

8. GUTTER SLOPE SHALL BE 4.17% SLOPED TOWARD THE MEDIAN UNLESS OTHERWISE NOTED. GUTTER SLOPE IS REVERSE PITCHED WHEN THE SHOULDER/FLEX LANE DRAINS AWAY FROM THE GUTTER. TRANSITION GUTTER SLOPE OVER 30'-0". GUTTER SLOPE TRANSITIONS ARE INCLUDED IN THE COST OF CONCRETE BASE AND/OR CONCRETE GUTTER (SPECIAL). SEE ROADWAY PLANS FOR LIMITS OF REVERSE PITCHED GUTTER AND TRANSITIONS.

APPROVED Paul Kovacs
CHIEF ENGINEERING OFFICER
DATE 2-7-2012

DATE	REVISIONS
8-28-2020	CHANGED TIE BAR DETAILS
3-01-2020	CHANGED MAX. VERTICAL DIFFERENTIAL TO 12"
3-01-2019	REVISED TO CONSTANT SLOPE ADDED TIE BARS
3-31-2016	REVISED NOTES
3-11-2015	REVISED NOTES
3-31-2014	MODIFIED BARRIER BASE

Illinois Tollway

CONCRETE BARRIER BASE, AND CONCRETE BARRIER, DOUBLE FACE, 44 INCH AND VARIABLE HEIGHT

STANDARD C5-08

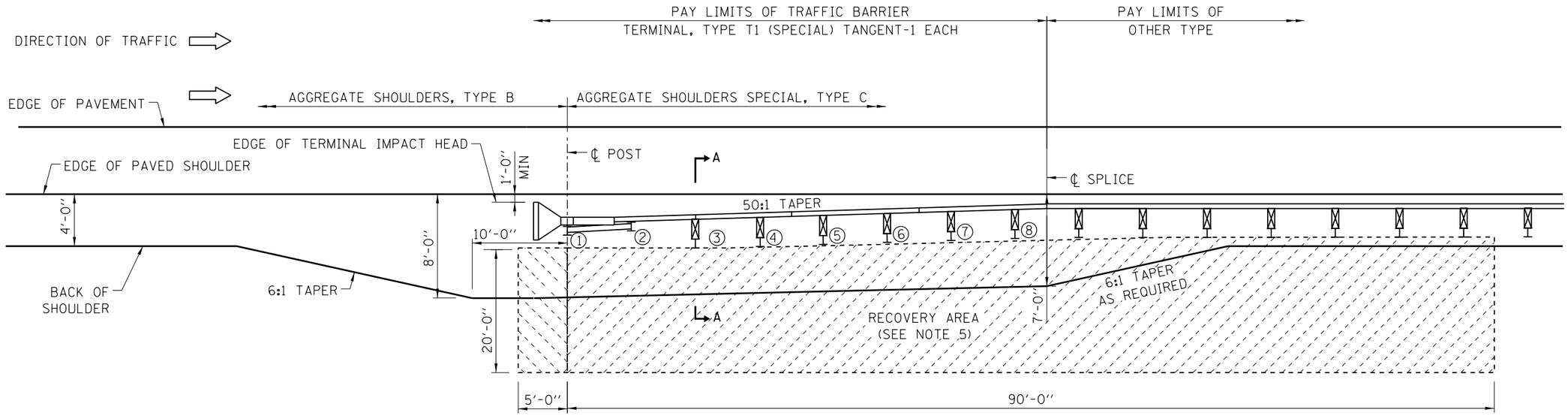

SHOULDER WIDENING TRANSITION - WITHOUT GUTTER FOR
TRAFFIC BARRIER TERMINAL, TYPE T1 (SPECIAL) TANGENT

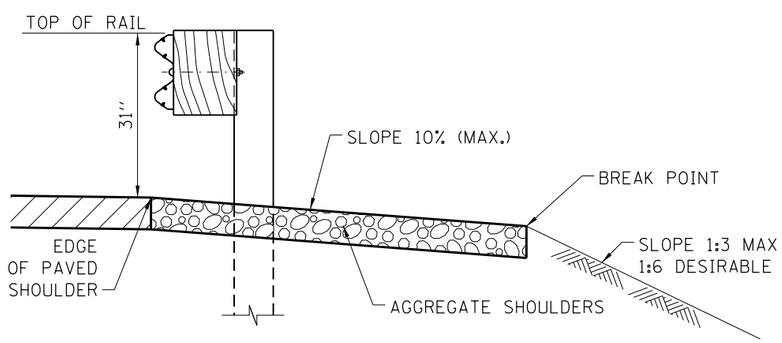

SECTION A-A

GENERAL NOTES:

1. ALL SLOPE RATIOS ARE EXPRESSED AS UNITS OF VERTICAL DISPLACEMENT TO UNITS OF HORIZONTAL DISPLACEMENT (V:H).

2. REFERENCE ILLINOIS TOLLWAY STANDARD DRAWING B28 FOR GUTTER TRANSITION, AND MINIMUM DISTANCE FROM EDGE OF PAVED SHOULDER TO FACE OF RAIL.

3. UNDER NO CIRCUMSTANCES SHALL AN EXISTING TERMINAL, THAT WAS DESIGNED USING A PREVIOUS STANDARD, BE ATTACHED TO OR MODIFIED IN ANY WAY FROM ITS ORIGINAL DESIGN. IF ANY MODIFICATION IS REQUIRED AND A PROPER BARRIER WARRANT HAS BEEN COMPLETED, THE ENTIRE BARRIER INSTALLATION SHALL BE COMPLETELY REMOVED AND REPLACED WITH A NEW SYSTEM THAT CONFORMS TO THE CURRENT STANDARD.

4. TRAFFIC BARRIER TERMINAL SHALL BE IN ACCORDANCE WITH THE MANUFACTURER'S DETAILS AND SPECIFICATIONS.

5. NO ABOVE-GROUND ROADSIDE OBSTACLE OF ANY TYPE-FIXED OR BREAKAWAY, EITHER TEMPORARY OR PERMANENT SHALL BE ALLOWED WITHIN THIS RECOVERY AREA.

6. ON TANGENT ROADWAY: TRAFFIC BARRIER TERMINAL SHALL BE INSTALLED AT A 50:1 TAPER MEASURED FROM EDGE OF TRAVELED WAY.
ON CURVED ROADWAY: THE EDGE OF THE TERMINAL IMPACT HEAD SHALL BE OFFSET A DISTANCE FROM A POINT ON THE BACK OF THE CURVED EDGE OF PAVED SHOULDER AS SHOWN IN TABLE 1. NO CURVED W-BEAM SECTIONS ARE PERMITTED WITHIN THE TERMINAL PAY LIMITS. THE TERMINAL SHALL BE LAID OUT IN A STRAIGHT LINE.

7. TERMINAL POSTS SHALL NOT BE INSTALLED IN CONCRETE OR ASPHALT. WHEN NECESSARY USE LEAVE-OUT DETAIL SHOWN ON ILLINOIS TOLLWAY STANDARD DRAWING C1.

8. THE TERMINAL SYSTEM HAS BEEN PERFORMANCE-TESTED FOR CRASHWORTHINESS UNDER PROCEDURES DEFINED IN AASHTO MASH. NO MODIFICATION TO THIS STANDARD DRAWING SHALL BE PERMITTED.

9. WHEN GUTTER IS PRESENT, DRAINAGE STRUCTURES SHALL NOT BE INSTALLED WITHIN THE TERMINAL LIMITS, BUT SHALL BE INSTALLED UPSTREAM AND DOWNSTREAM OF THE TERMINAL AS REQUIRED.

DATE	REVISIONS
3-01-2020	ADDED MOD. TO TABLE 1 & PLAN NOTE
3-01-2019	REVISED NOTES FOR MASH
3-31-2017	REVISED NOTES
3-31-2016	COMBINED G-3 & G-2
3-11-2015	REVISED NOTES
03-31-14	REVISED RECOVERY AREA DIMENSION

Illinois Tollway

SHOULDER WIDENING FOR
TRAFFIC BARRIER TERMINAL,
TYPE T1 (SPECIAL) TANGENT

STANDARD C6-11

Paul Kovacs
APPROVED CHIEF ENGINEERING OFFICER
DATE 7-1-2009

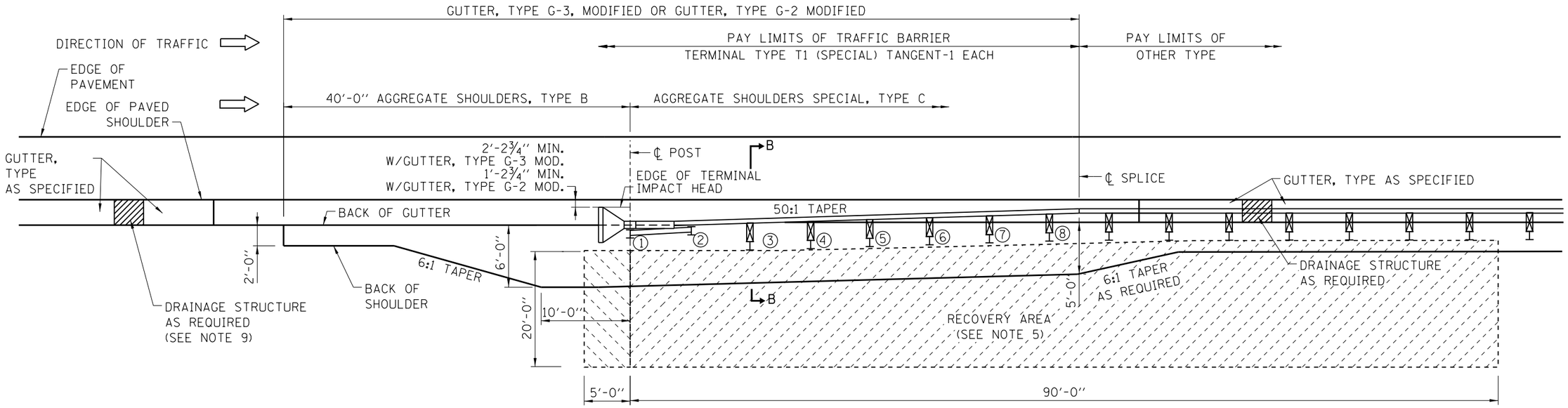

SHOULDER WIDENING TRANSITION - WITH GUTTER, TYPE G-3 OR TYPE G-2 FOR TRAFFIC BARRIER TERMINAL, TYPE T1 (SPECIAL) TANGENT

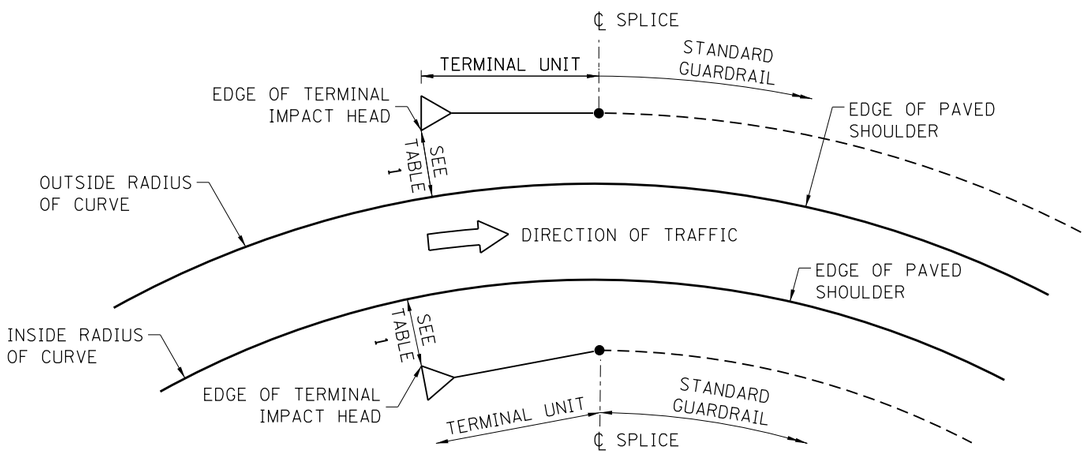

CURVED ROADWAY
TRAFFIC BARRIER TERMINAL PLACEMENT

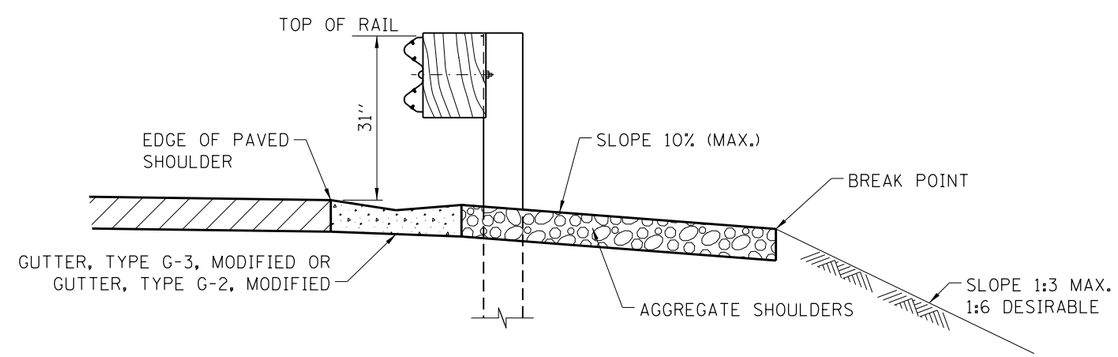

SECTION B-B

TABLE 1		
LATERAL OFFSET DIMENSION TO EDGE OF TERMINAL IMPACT HEAD		
	INSIDE RADIUS OF CURVE	OUTSIDE RADIUS OF CURVE
NO GUTTER	1'-0"	1'-0" *
GUTTER, TYPE G-2, MOD.	1'-2¾"	1'-2¾" MIN. *
GUTTER, TYPE G-3, MOD.	2'-2¾"	2'-2¾" MIN. *

(*) OFFSET DISTANCE WILL VARY BASED ON RADIUS OF HORIZONTAL CURVE AND THE TERMINAL BEING INSTALLED IN A STRAIGHT LINE.

NOTES:

SEE SHEET 1 OF THIS SERIES FOR NOTES.

Paul Kovacs
APPROVED CHIEF ENGINEERING OFFICER DATE 7-1-2009

SHEET 2 OF 2

Illinois Tollway

SHOULDER WIDENING FOR TRAFFIC BARRIER TERMINAL, TYPE T1 (SPECIAL) TANGENT

STANDARD C6-11

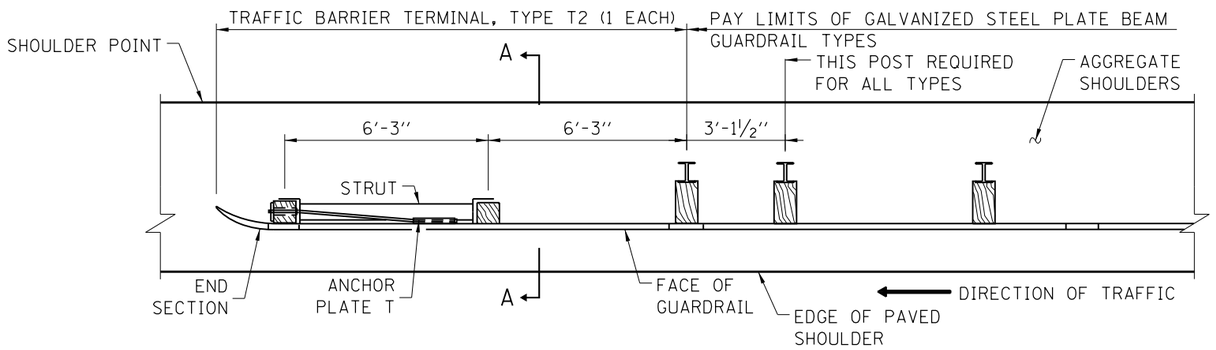

PLAN

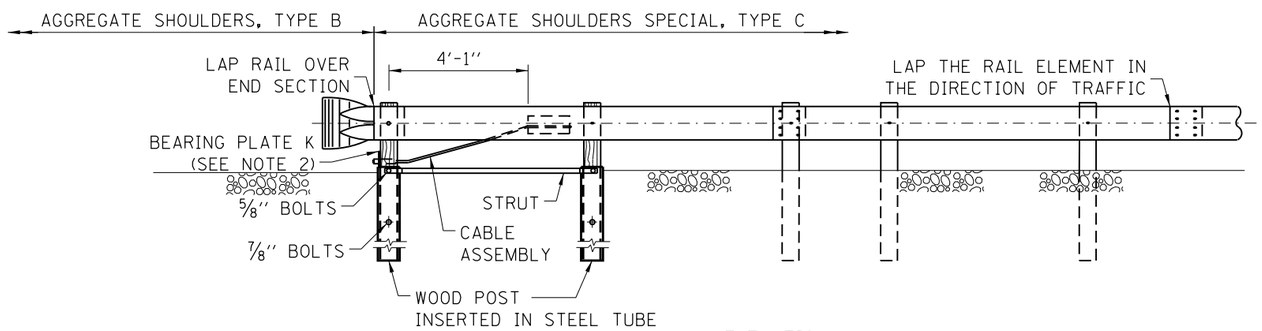

ELEVATION

TRAFFIC BARRIER TERMINAL, TYPE T2-WITHOUT GUTTER

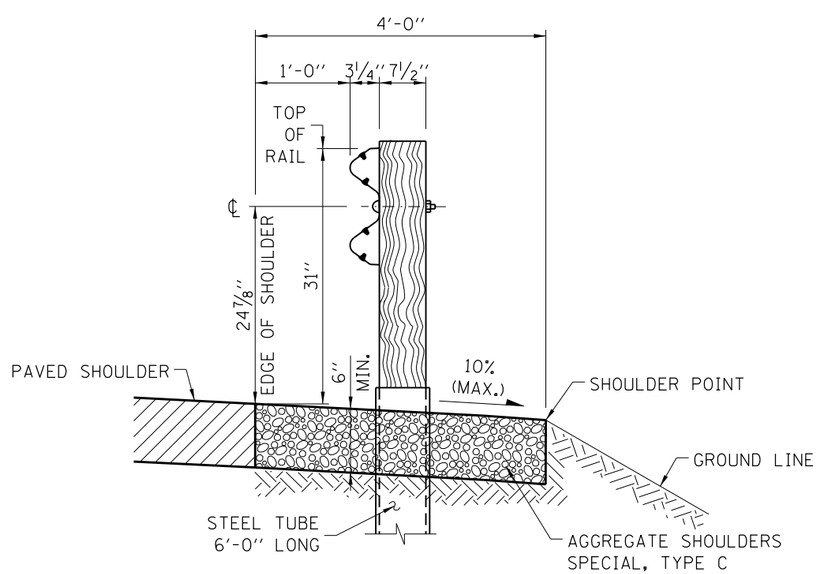

SECTION A-A

NOTES:

1. SEE ILLINOIS TOLLWAY STANDARD DRAWING C1 FOR DETAILS OF GUARDRAIL NOT SHOWN.
2. THE BEARING PLATE K SHALL BE HELD IN POSITION BY TWO 8D NAILS DRIVEN INTO THE POST AND BENT OVER THE TOP OF THE PLATE.
3. THE TRAFFIC BARRIER TERMINAL, TYPE T2 IS TYPICALLY UTILIZED FOR THE DEPARTING END SECTION OF A GALVANIZED STEEL PLATE BEAM GUARDRAIL BARRIER SYSTEM.
4. UNDER NO CIRCUMSTANCES SHALL AN EXISTING TERMINAL, THAT WAS DESIGNED USING A PREVIOUS STANDARD, BE ATTACHED TO OR MODIFIED IN ANYWAY FROM ITS ORIGINAL DESIGN. IF ANY MODIFICATION IS REQUIRED AND A PROPER BARRIER WARRANT HAS BEEN COMPLETED, THE ENTIRE BARRIER INSTALLATION SHALL BE COMPLETELY REMOVED AND REPLACED WITH A NEW SYSTEM THAT CONFORMS TO THE CURRENT STANDARD.
5. TRAFFIC BARRIER TERMINAL SHALL BE IN ACCORDANCE WITH THE ILLINOIS TOLLWAY'S DETAILS AND SPECIFICATIONS. NO MODIFICATIONS SHALL BE PERMITTED.
6. TERMINAL POSTS SHALL NOT BE INSTALLED IN CONCRETE OR ASPHALT PAVEMENT. WHEN NECESSARY USE LEAVE-OUT DETAIL PER ILLINOIS TOLLWAY STANDARD DRAWING C1.
7. WHERE GUTTER, TYPE G-2 OR GUTTER, TYPE G-3 ARE REQUIRED IN FRONT OF THE GUARDRAIL, THE POSTS SHALL BE LOCATED 6" BEHIND THE GUTTER, OR AS OTHERWISE DETAILED IN THE PLANS. THE OFFSET FROM THE EDGE OF SHOULDER TO THE FACE OF THE GUARDRAIL SHALL BE AS SHOWN ON ILLINOIS TOLLWAY STANDARD DRAWING B28.

Illinois Tollway

DATE	REVISIONS
3-31-2017	REVISED SECT A-A SHOULDER SLOPE TO %
3-31-2016	REVISED SECTION A-A SHOULDER
3-11-2015	REVISED NOTES
3-31-2014	REVISED NOTES
11-01-2012	MODIFIED AGGREGATE SHOULDERS,
	REVISED WOOD POST DIMENSION
2-07-2012	REVISED DIMENSIONS OF BEARING PLATE,
	POST, CABLE STRUT AND TUBE AND NOTES

TRAFFIC BARRIER TERMINAL, TYPE T2

STANDARD C7-08

APPROVED Paul Kovacs CHIEF ENGINEER DATE 7-1-2009

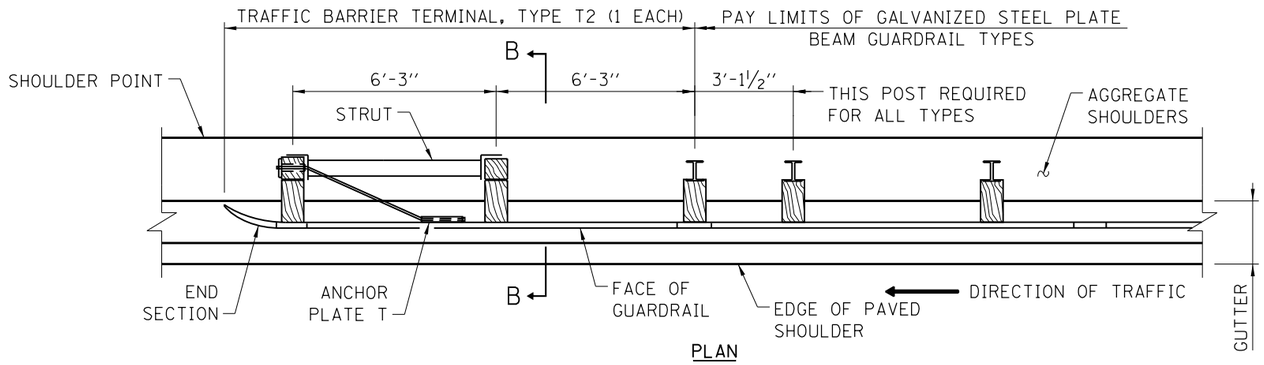

PLAN

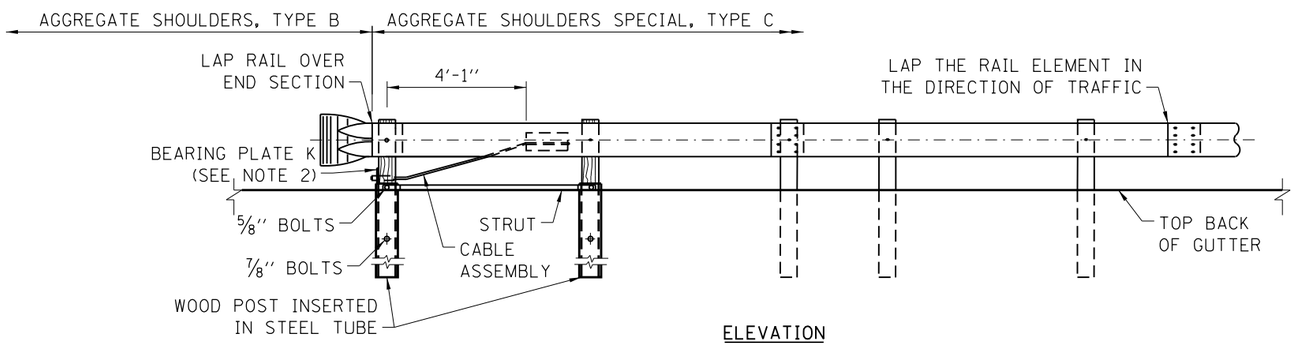

ELEVATION

TRAFFIC BARRIER TERMINAL, TYPE T2-WITH GUTTER

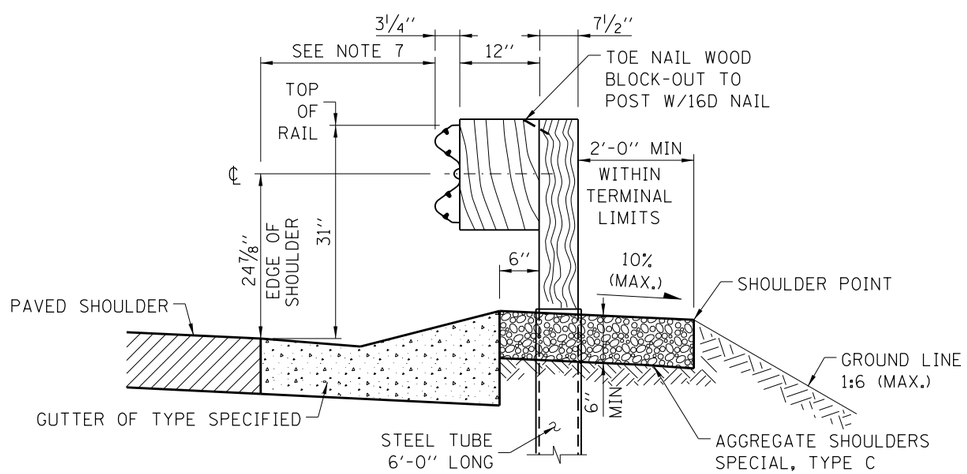

SECTION B-B

NOTE:

SEE SHEET 1 OF THIS SERIES FOR NOTES.

Paul Kovacs
APPROVED ..... CHIEF ENGINEER
DATE 7-1-2009

SHEET 2 OF 3

Illinois Tollway

TRAFFIC BARRIER TERMINAL, TYPE T2

STANDARD C7-08

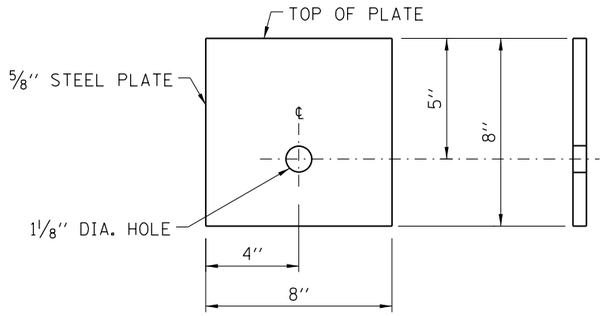

BEARING PLATE K

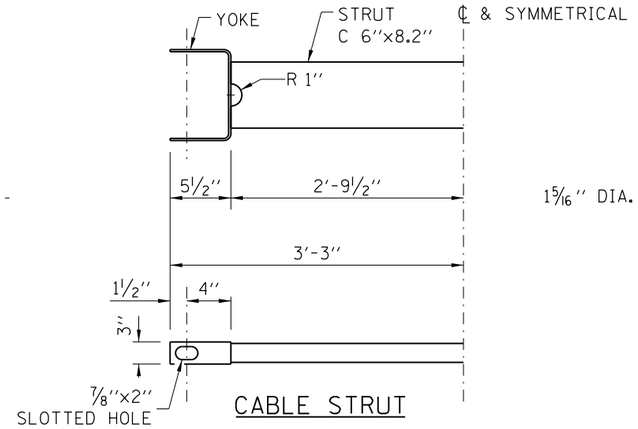

CABLE STRUT

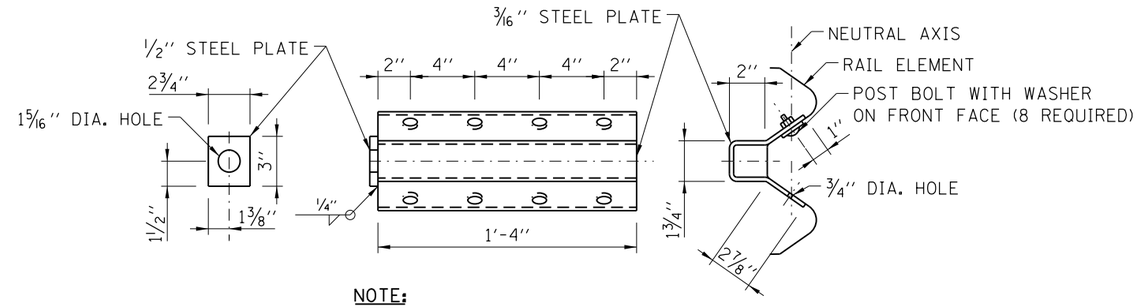

NOTE:
ANCHOR PLATE T SHALL BE USED TO ATTACH CABLE ASSEMBLY TO GUARDRAIL WHEN REQUIRED ON TRAFFIC BARRIER TERMINALS.

ANCHOR PLATE T DETAILS

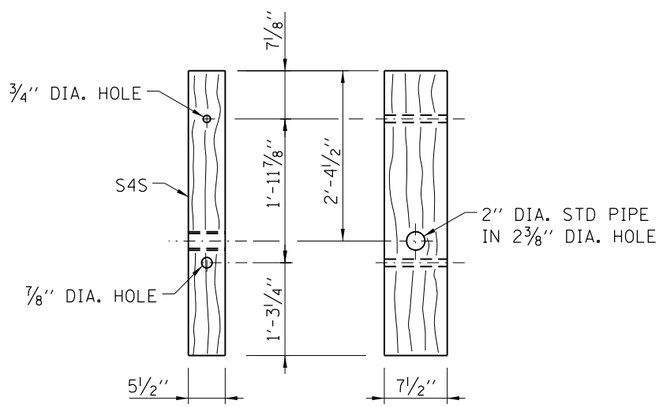

WOOD POST

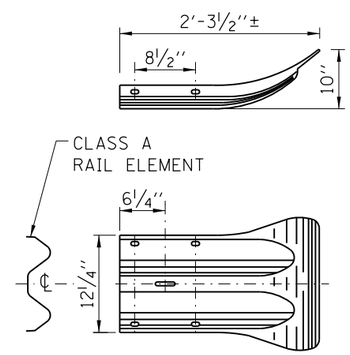

END SECTION

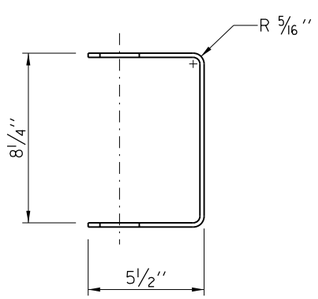

YOKE
3/16'' THICK STEEL

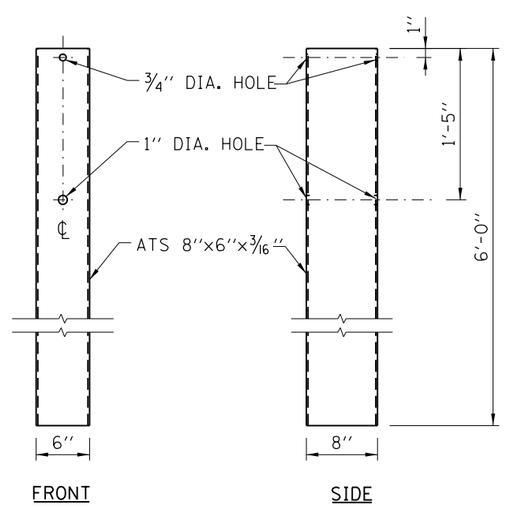

STEEL TUBE

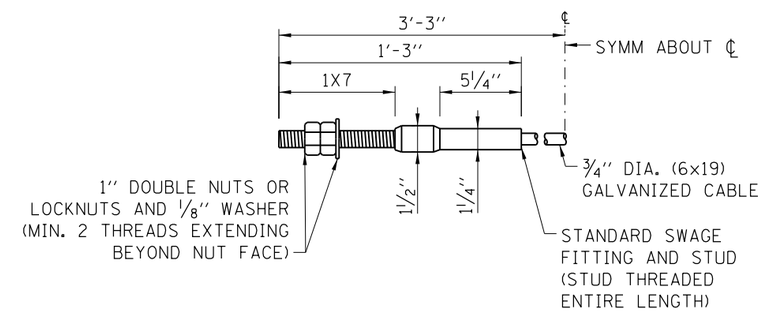

CABLE ASSEMBLY
(40,000 LBS.) MIN. BREAKING STRENGTH)
TIGHTEN TO TAUT TENSION

NOTE:
SEE SHEET 1 OF THIS SERIES FOR NOTES.

SHEET 3 OF 3

Illinois Tollway

TRAFFIC BARRIER TERMINAL, TYPE T2

STANDARD C7-08

Paul Kovacs
APPROVED ..... CHIEF ENGINEER
DATE 7-1-2009

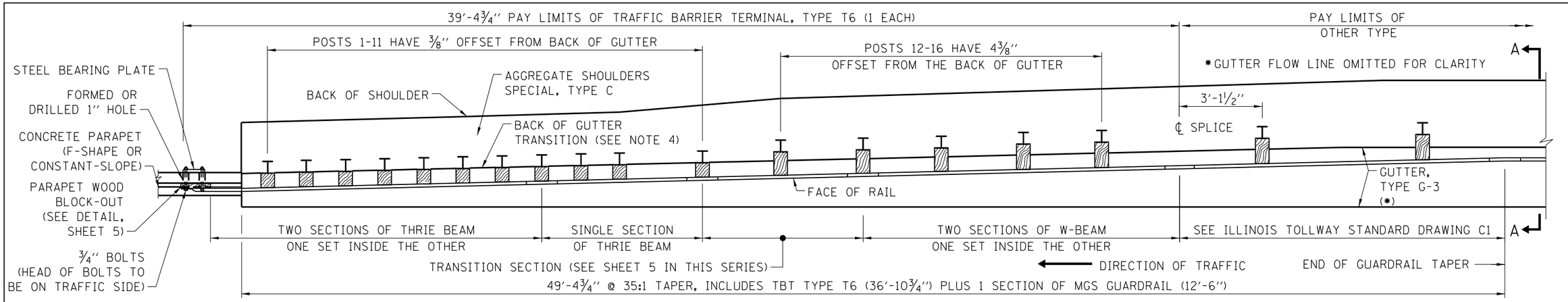

PLAN

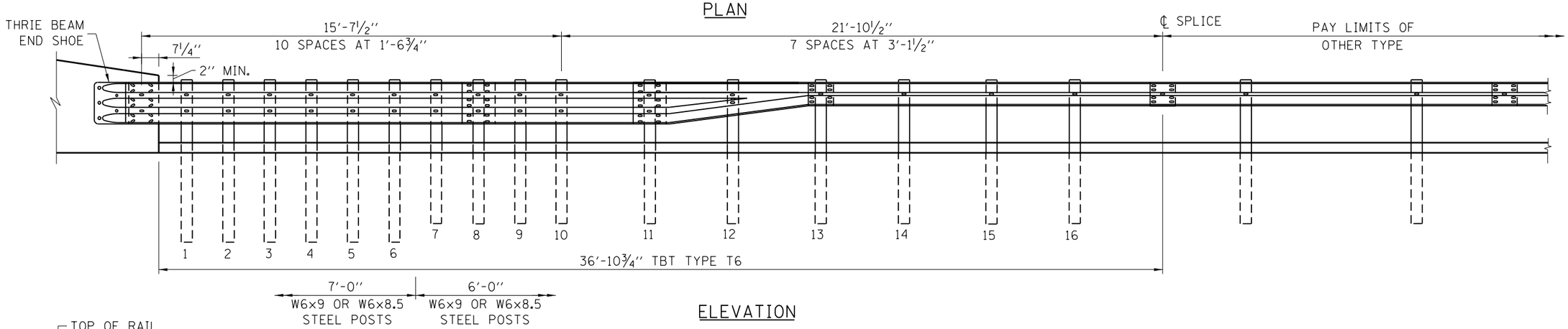

ELEVATION

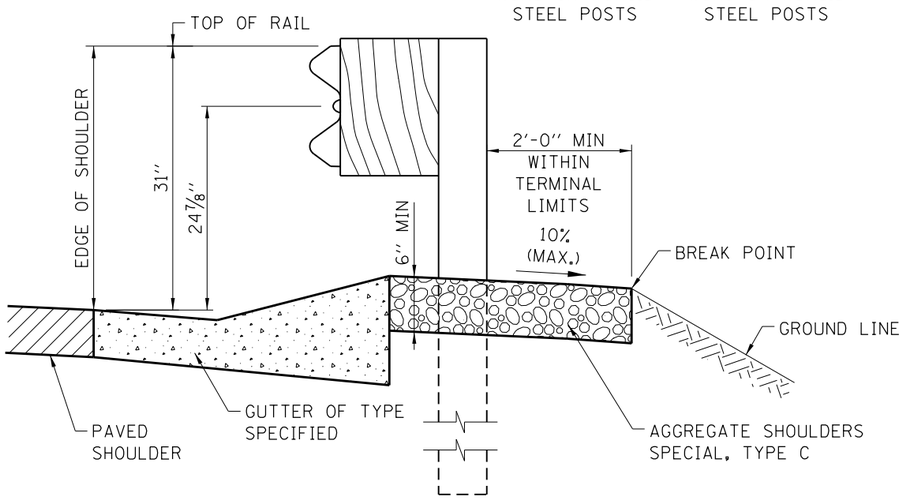

WITH GUTTER, TYPE G-3

SECTION A-A

NOTES:

1. SEE ILLINOIS TOLLWAY STANDARD DRAWING C1 FOR DETAILS OF GUARDRAIL NOT SHOWN.
2. THRIE BEAM RAIL SHALL BE BOLTED TO BLOCK-OUT AT ALL POSTS.
3. THE TRAFFIC BARRIER TERMINAL, TYPE T6 IS TYPICALLY UTILIZED TO ATTACH GALVANIZED STEEL PLATE BEAM GUARDRAIL AT THE UPSTREAM END OF THE BRIDGES CONCRETE PARAPET, WHERE A ROADSIDE GUTTER IS TO BE INSTALLED.
4. SEE ILLINOIS TOLLWAY STANDARD DRAWING B3 FOR GUTTER TRANSITION AT TRAFFIC BARRIER TERMINAL, TYPE T6.
5. UNDER NO CIRCUMSTANCES SHALL AN EXISTING TERMINAL, THAT WAS DESIGNED USING A PREVIOUS STANDARD, BE ATTACHED TO OR MODIFIED IN ANYWAY FROM ITS ORIGINAL DESIGN. IF ANY MODIFICATION IS REQUIRED AND A PROPER WARRANT HAS BEEN COMPLETED, THE ENTIRE BARRIER INSTALLATION SHALL BE COMPLETELY REMOVED AND REPLACED WITH A NEW SYSTEM THAT CONFORMS TO THE CURRENT STANDARD.
6. TRAFFIC BARRIER TERMINAL, TYPE T6 SHALL BE IN ACCORDANCE WITH THE ILLINOIS TOLLWAY'S DETAILS AND SPECIFICATIONS. NO MODIFICATIONS SHALL BE PERMITTED.
7. TERMINAL POSTS SHALL NOT BE INSTALLED IN CONCRETE OR ASPHALT PAVEMENTS. WHEN NECESSARY USE LEAVE-OUT DETAIL PER ILLINOIS TOLLWAY STANDARD DRAWING C1.
8. TERMINAL POSTS TO BE INSTALLED PERPENDICULAR TO BACK OF GUTTER.
9. THE TERMINAL SYSTEM HAS BEEN PERFORMANCE-TESTED FOR CRASHWORTHINESS UNDER PROCEDURES DEFINED IN AASHTO MASH. NO MODIFICATION TO THIS STANDARD DRAWING SHALL BE PERMITTED.
10. TERMINAL BARRIER CLEARANCE DISTANCE SHALL CONFORM WITH TABLE 2 ON ILLINOIS TOLLWAY STANDARD DRAWING C1.
11. LEAVE-OUT DIMENSION BEHIND POSTS 1-6, SHALL BE A MINIMUM OF 4''.
12. WHEN GUTTER IS PRESENT, DRAINAGE STRUCTURES SHALL NOT BE INSTALLED WITHIN THE TERMINAL LIMITS, BUT SHALL BE INSTALLED UPSTREAM AND DOWNSTREAM OF THE TERMINAL AS REQUIRED.

SHEET 1 OF 5

DATE	REVISIONS
3-01-2020	REVISED LENGTH OF THRIE BEAM
	REVISED LENGTH OF POSTS
3-01-2019	UPDATED NOTES FOR
	CONSTANT-SLOPE CONCRETE BARRIER
3-31-2017	ADDED DRAINAGE STRUCTURE NOTE
3-31-2016	REVISED SHOULDER SECTION
3-11-2015	REVISED NOTES AND ADDED DETAIL.
3-31-2014	REVISED NOTES.

Illinois Tollway

TRAFFIC BARRIER TERMINAL, TYPE T6

STANDARD C9-10

Paul Kovacs
APPROVED CHIEF ENGINEERING OFFICER
DATE 7-1-2009

FOR PARAPET (SAFETY SHAPE) WITH GUTTER, TYPE G-3

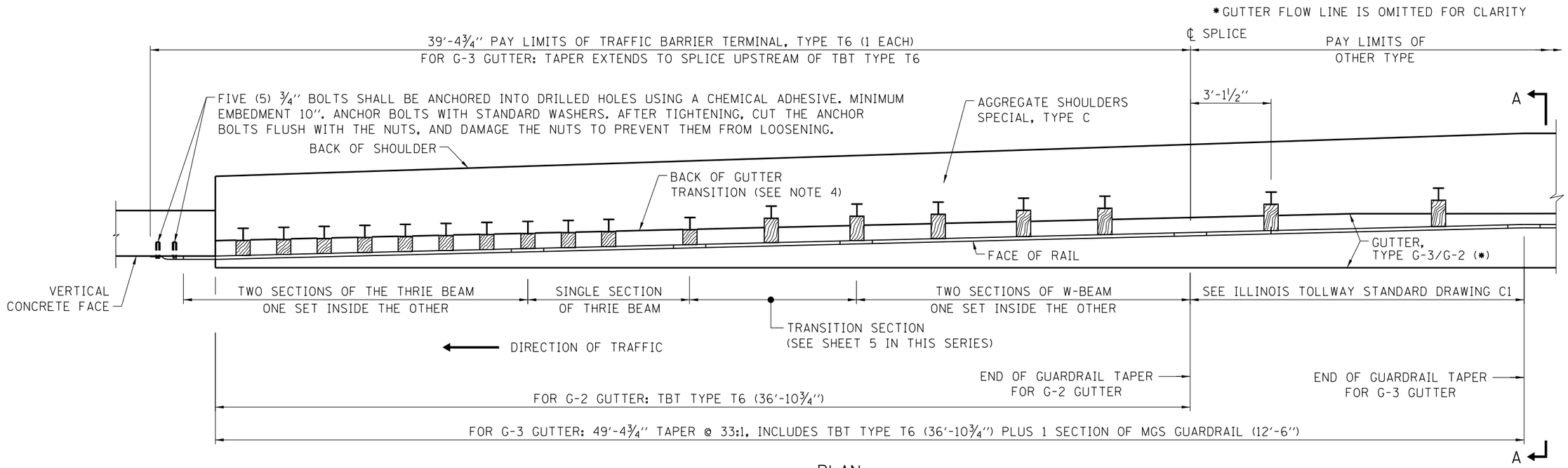

PLAN

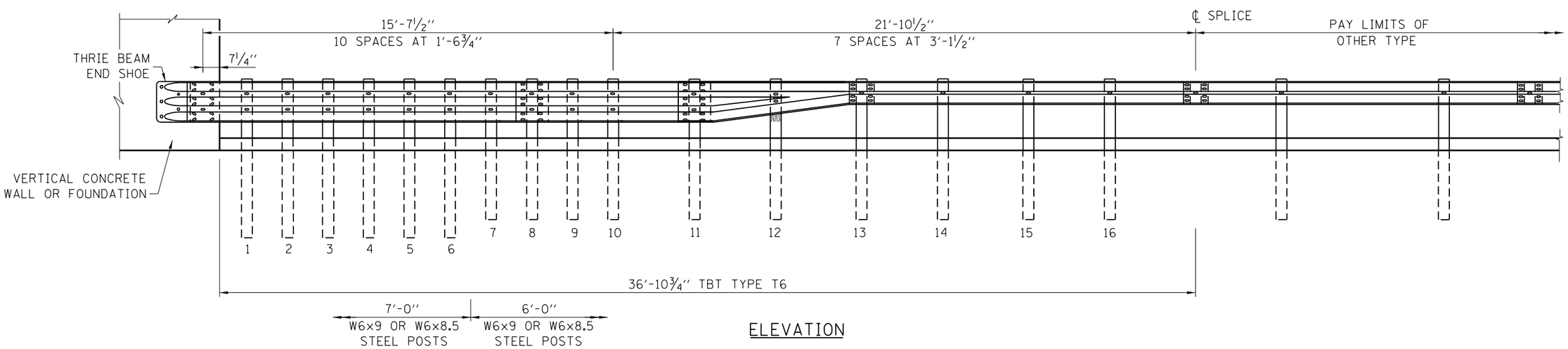

ELEVATION

FOR OTHER VERTICAL CONCRETE WALL/FOUNDATION WITH GUTTER

Illinois Tollway

TRAFFIC BARRIER TERMINAL, TYPE T6

STANDARD C9-10

Paul Kovacs
APPROVED CHIEF ENGINEERING OFFICER
DATE 7-1-2009

NOTE:
SEE SHEET 1 OF THIS SERIES FOR NOTES AND SECTION A-A.

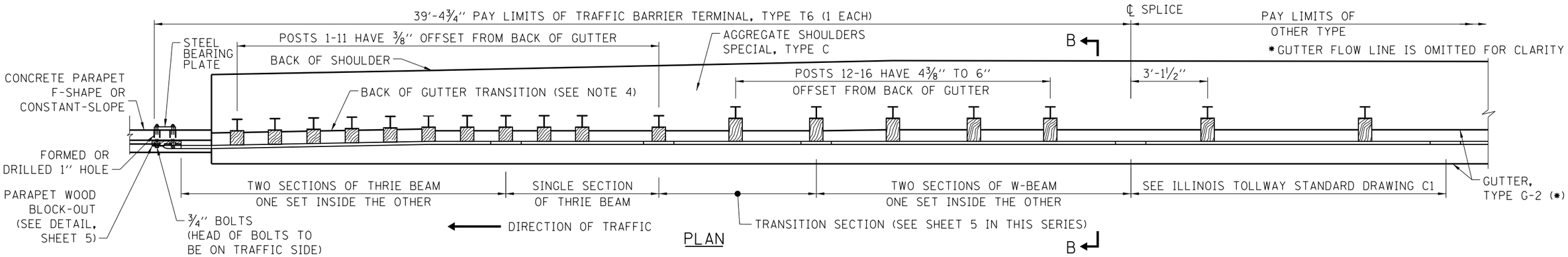

PLAN

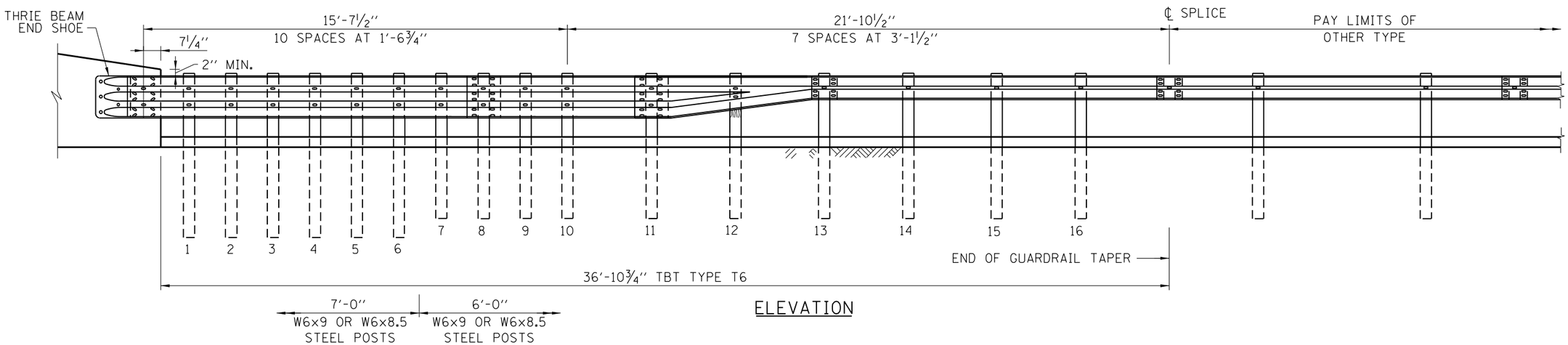

ELEVATION

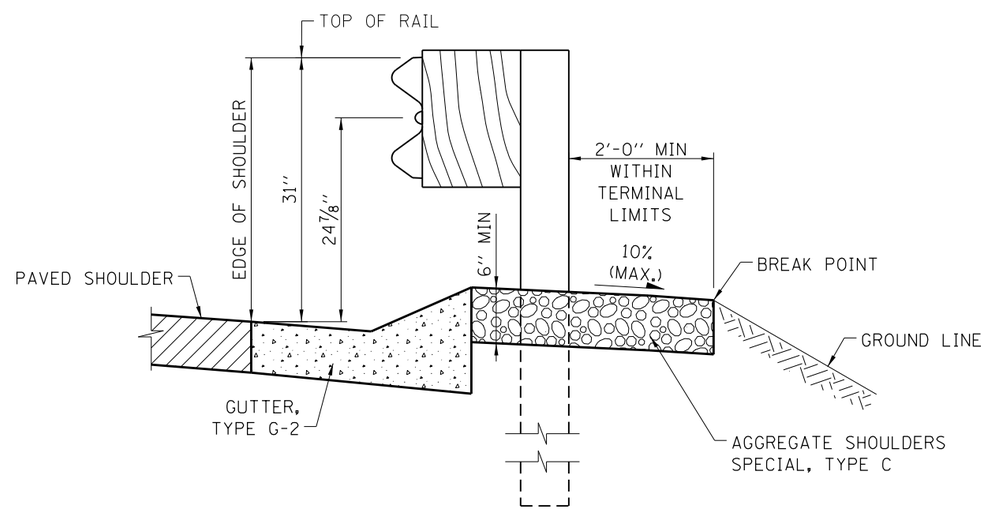

SECTION B-B
WITH GUTTER, TYPE G-2

FOR PARAPET (SAFETY SHAPE)
WITH GUTTER, TYPE G-2

NOTE:
SEE SHEET 1 OF THIS SERIES FOR NOTES.

SHEET 3 OF 5

Illinois Tollway

TRAFFIC BARRIER TERMINAL
TYPE T6

STANDARD C9-10

APPROVED Paul Kovacs
CHIEF ENGINEERING OFFICER
DATE 7-1-2009

*GUTTER FLOW LINE IS OMITTED FOR CLARITY

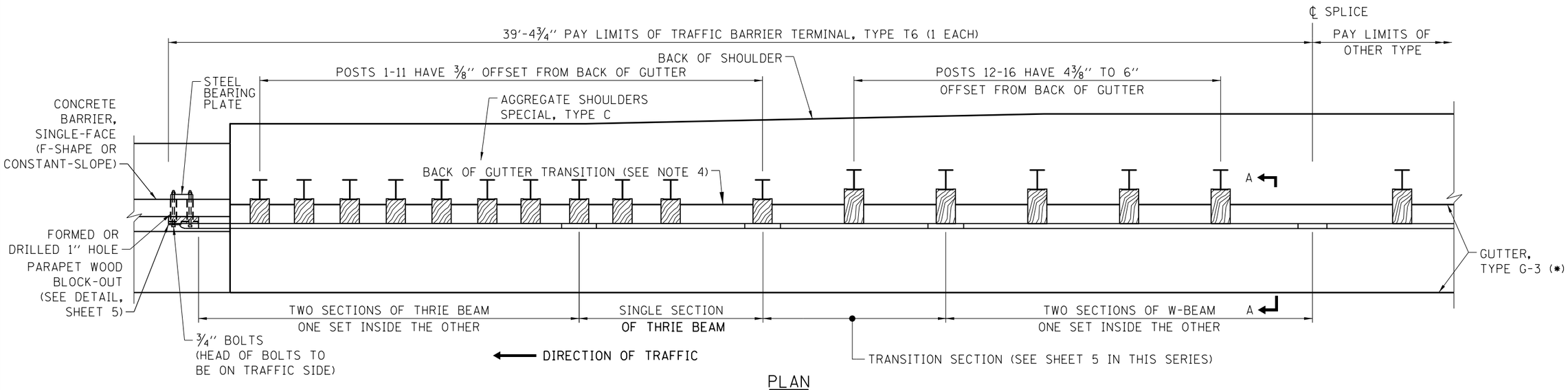

PLAN

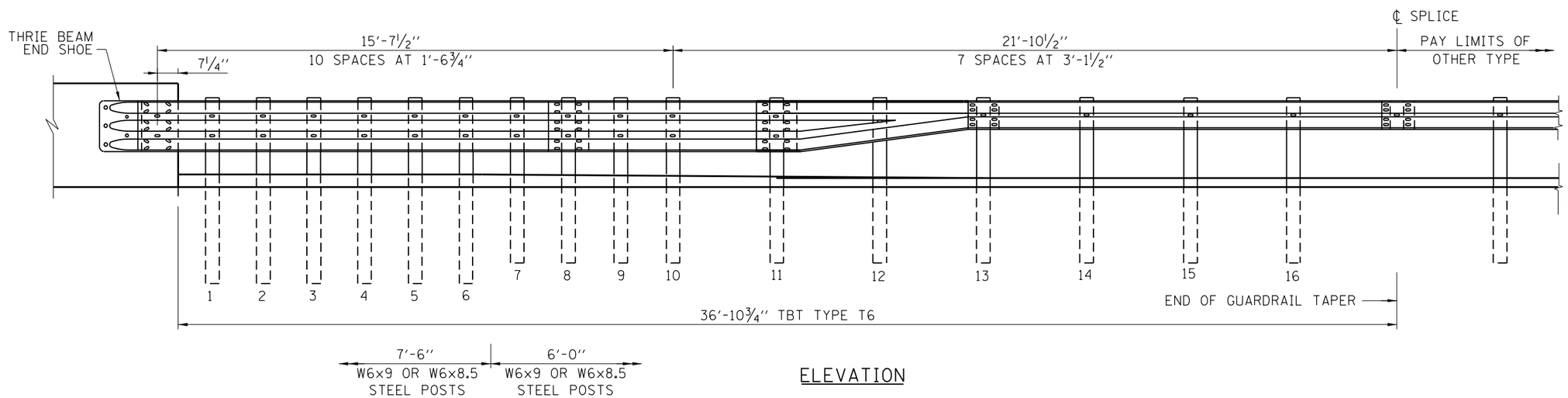

ELEVATION

FOR CONCRETE BARRIER, SINGLE-FACE W/ GUTTER, TYPE G-3

Illinois Tollway

TRAFFIC BARRIER TERMINAL, TYPE T6

STANDARD C9-10

NOTE:

SEE SHEET 1 OF THIS SERIES FOR GUTTER TRANSITION NOTES AND SECTION A-A.

Paul Kovacs
APPROVED CHIEF ENGINEERING OFFICER
DATE 2-7-2012

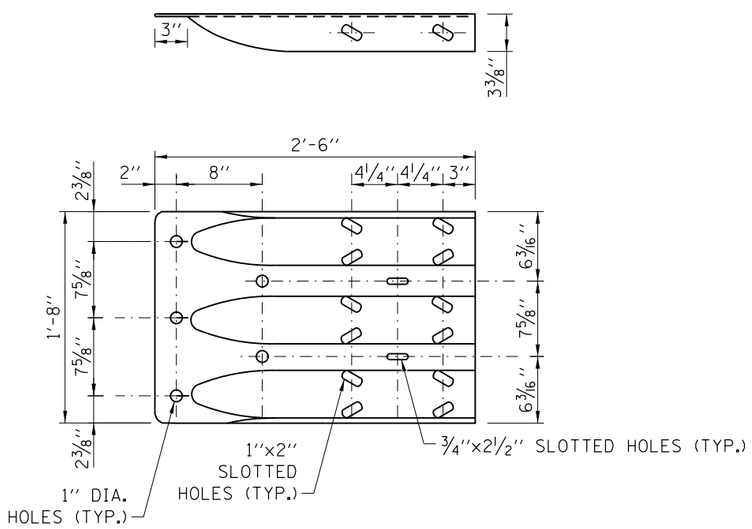

THRIE BEAM END SHOE DETAIL

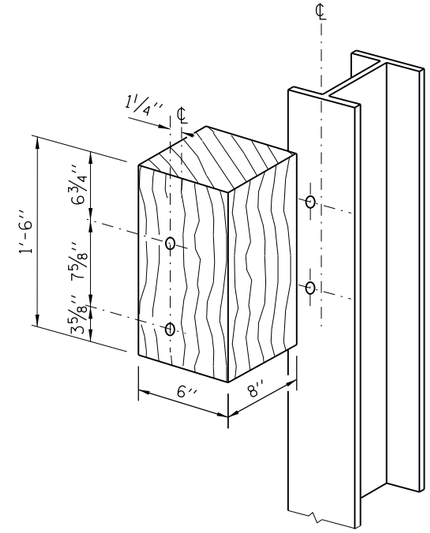

POSTS 1-11 WOOD BLOCK-OUT DETAIL

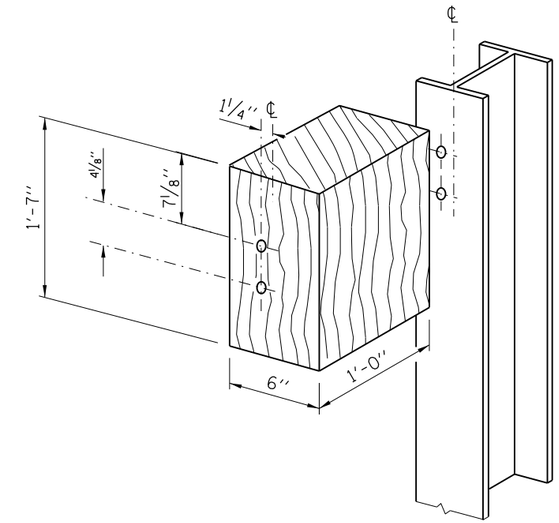

POST 12 WOOD BLOCK-OUT DETAIL

(SEE ILLINOIS TOLLWAY STANDARD DRAWING C1 FOR POST 13-16 BLOCKOUTS)

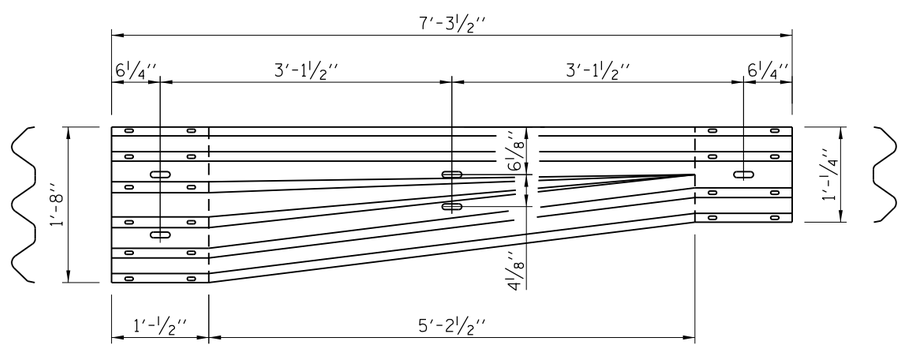

TRANSITION SECTION

(10 GAUGE RAIL ELEMENT)

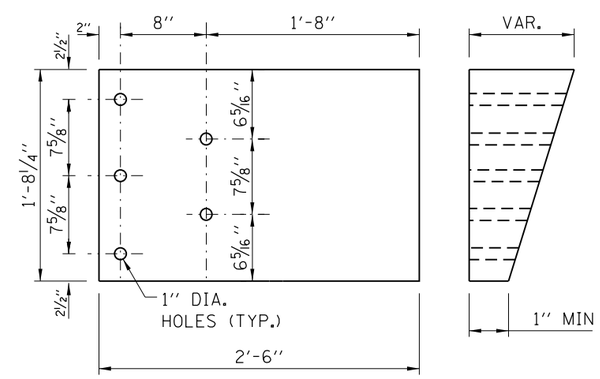

PARAPET WOOD BLOCK-OUT DETAIL

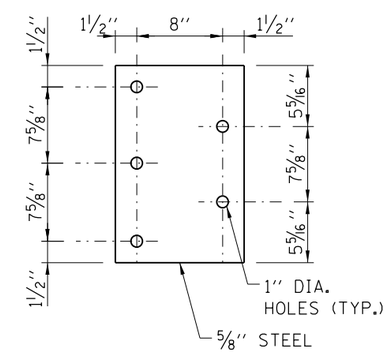

PARAPET STEEL BEARING PLATE DETAIL

(5 EACH INDIVIDUAL 5''x5''x5/8'' STEEL PLATES WITH CENTERED 1'' HOLES MAY BE SUBSTITUTED FOR THE PLATE SHOWN.)

NOTE:
SEE SHEET 1 OF THIS SERIES FOR NOTES.

Illinois Tollway

TRAFFIC BARRIER TERMINAL, TYPE T6

STANDARD C9-10

Paul Kovacs
APPROVED CHIEF ENGINEERING OFFICER
DATE 7-1-2009

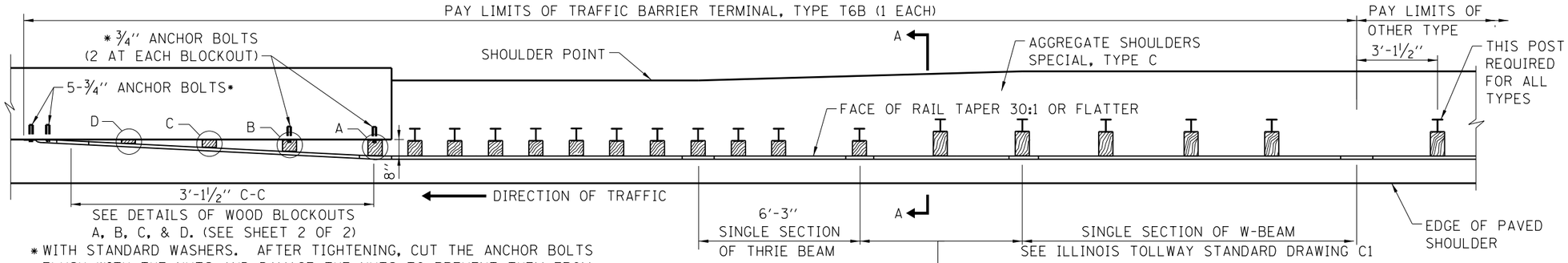

* WITH STANDARD WASHERS. AFTER TIGHTENING, CUT THE ANCHOR BOLTS FLUSH WITH THE NUTS AND DAMAGE THE NUTS TO PREVENT THEM FROM LOOSENING. BOLTS SHALL BE ANCHORED INTO DRILLED HOLES USING A CHEMICAL ADHESIVE RESIN SYSTEM. MINIMUM EMBEDMENT 10''.

PLAN

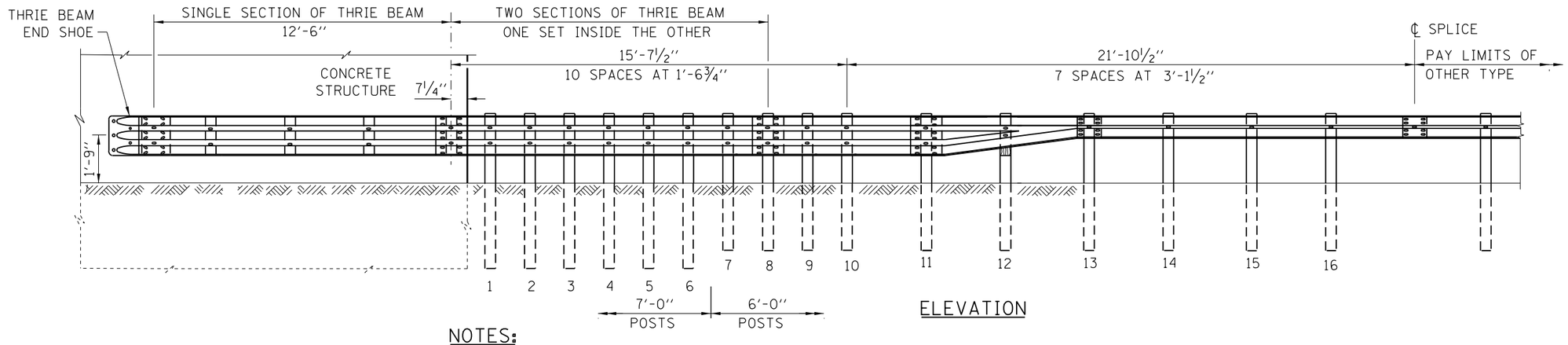

ELEVATION

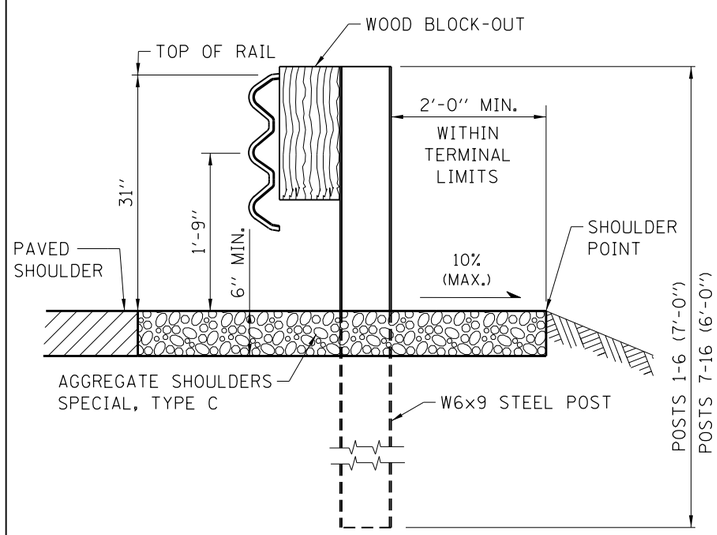

SECTION A-A

NOTES:

1. SEE ILLINOIS TOLLWAY STANDARD DRAWING C1 FOR DETAILS OF GUARDRAIL NOT SHOWN.
2. THRIE BEAM RAIL SHALL BE BOLTED TO BLOCK-OUT AT ALL POSTS.
3. THE TRAFFIC BARRIER TERMINAL, TYPE T6B IS TYPICALLY UTILIZED TO ATTACH GALVANIZED STEEL PLATE BEAM GUARDRAIL AT THE UPSTREAM END OF THE BRIDGE CONCRETE PARAPET, WHERE A ROADSIDE GUTTER IS NOT TO BE INSTALLED.
4. UNDER NO CIRCUMSTANCES SHALL EXISTING TERMINAL, THAT WAS DESIGNED USING A PREVIOUS STANDARD, BE ATTACHED TO OR MODIFIED IN ANYWAY FROM ITS ORIGINAL DESIGN. IF ANY MODIFICATION IS REQUIRED AND A PROPER BARRIER WARRANT HAS BEEN COMPLETED, THE ENTIRE BARRIER INSTALLATION SHALL BE COMPLETELY REMOVED AND REPLACED WITH A NEW SYSTEM THAT CONFORMS TO THE CURRENT STANDARD.
5. TRAFFIC BARRIER TERMINAL SHALL BE IN ACCORDANCE WITH THE ILLINOIS TOLLWAY'S DETAILS AND SPECIFICATIONS. NO MODIFICATIONS SHALL BE PERMITTED.
6. TERMINAL POSTS SHALL NOT BE INSTALLED IN CONCRETE OR ASPHALT PAVEMENTS. WHEN NECESSARY USE LEAVE-OUT DETAIL PER ILLINOIS TOLLWAY STANDARD DRAWING C1, SHEET 3 OF 4.
7. TERMINAL BARRIER CLEARANCE DISTANCE SHALL CONFORM WITH TABLE 2 ON ILLINOIS TOLLWAY STANDARD DRAWING C1.
8. LEAVE-OUT DIMENSION BEHIND POSTS 1-6, SHALL BE A MINIMUM OF 4''.

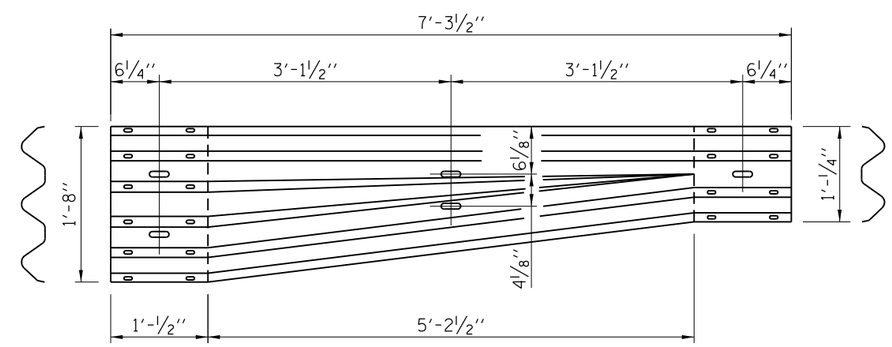

TRANSITION SECTION
(10 GUAGE RAIL ELEMENT)

SHEET 1 OF 2

DATE	REVISIONS
3-01-2020	REVISED LENGTH OF THRIE BEAM
	REVISED LENGTH OF POSTS
3-31-2017	REVISED SHOULDER SLOPE LABEL
3-31-2016	REVISED SECTION A-A SHOULDER
3-11-2015	REVISED NOTES
3-31-2014	REVISED WOOD BLOCKS AND NOTES
11-01-2012	MODIFIED AGGREGATE SHOULDERS, REVISED NOTES

Illinois Tollway

TRAFFIC BARRIER TERMINAL, TYPE T6B

STANDARD C10-09

Paul Kovacs
APPROVED . . . . . DATE 7-1-2009
CHIEF ENGINEERING OFFICER

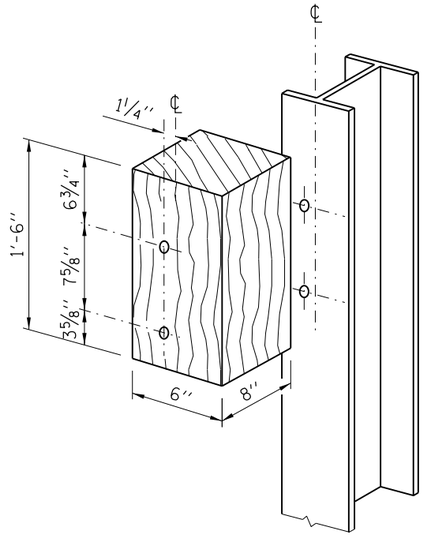

POSTS 1-11 WOOD BLOCK-OUT DETAIL

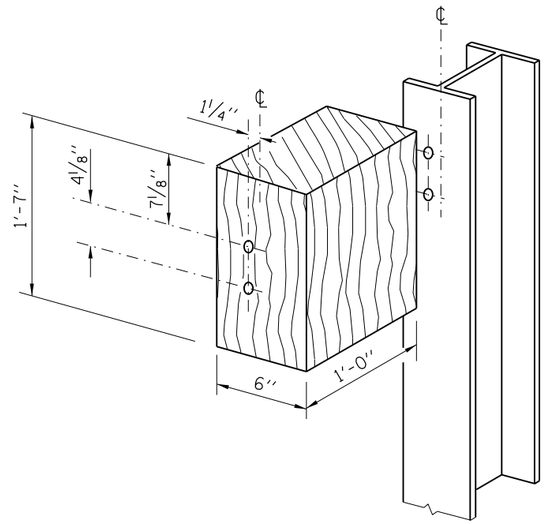

POST 12 WOOD BLOCK-OUT DETAIL

(SEE ILLINOIS TOLLWAY STANDARD DRAWING C1 FOR POST 13-16 BLOCKOUTS)

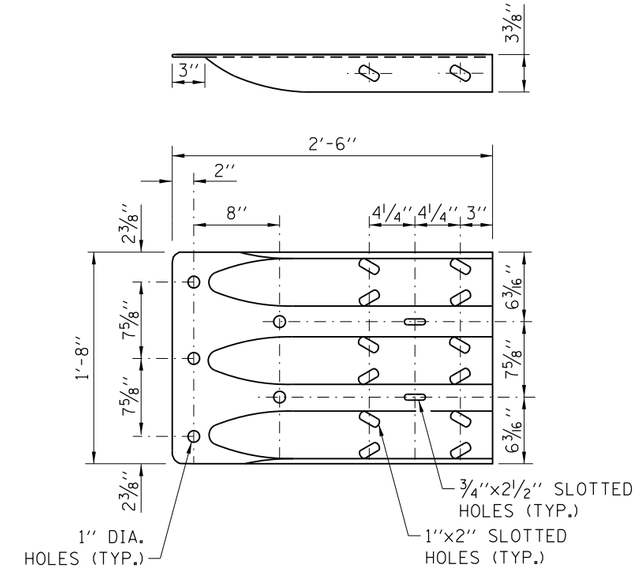

THRIE BEAM END SHOE DETAIL

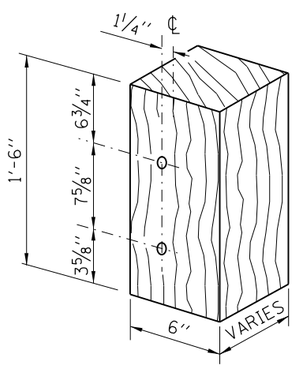

MODIFIED THICKNESS DETAIL
WOOD BLOCK-OUTS A, B, C, & D

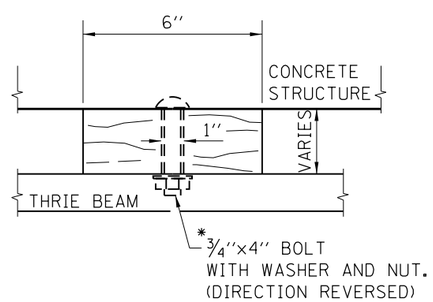

WOOD BLOCK-OUT D

* AFTER TIGHTENING, CUT THE BOLTS FLUSH WITH THE NUTS AND DAMAGE THE NUTS TO PREVENT THEM FROM LOOSENING.

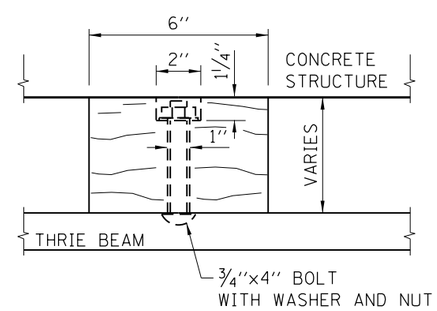

WOOD BLOCK-OUT C

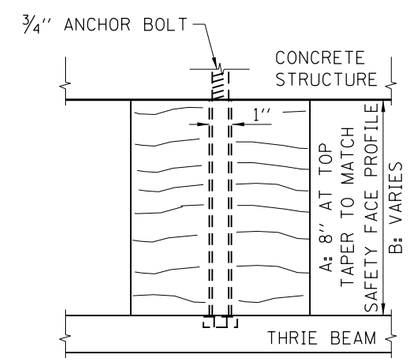

WOOD BLOCK-OUT A & B

SHEET 2 OF 2

Illinois Tollway

TRAFFIC BARRIER TERMINAL, TYPE T6B

STANDARD C10-09

NOTE:

SEE SHEET 1 OF THIS SERIES FOR NOTES.

Paul Kovacs
APPROVED ..... DATE 7-1-2009
CHIEF ENGINEERING OFFICER

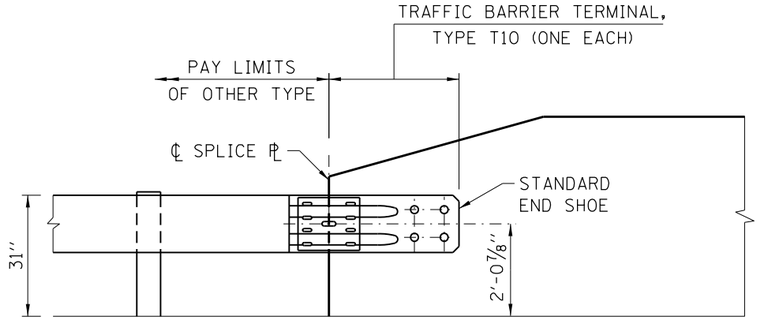

ELEVATION

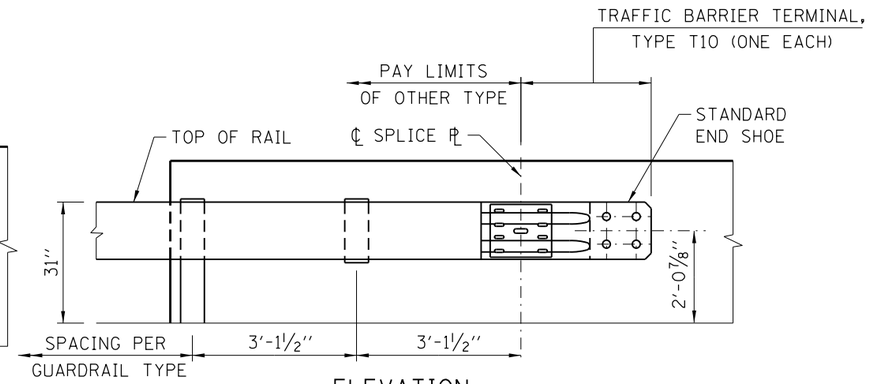

ELEVATION

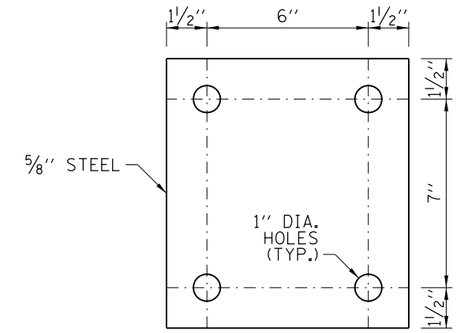

PARAPET STEEL BEARING PLATE DETAIL

(4 EACH INDIVIDUAL 5''x5''x5/8'' STEEL PLATES WITH CENTERED HOLES MAY BE SUBSTITUTED FOR THE PLATE SHOWN)

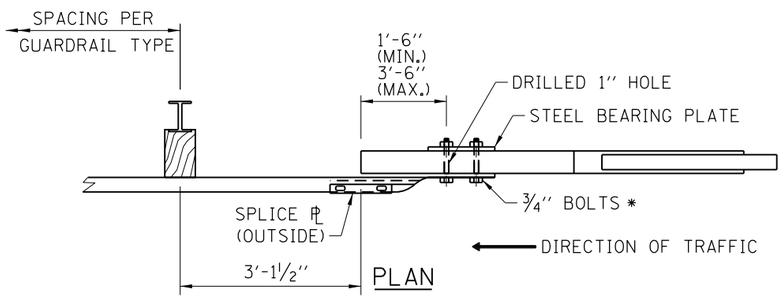

TANGENT WING

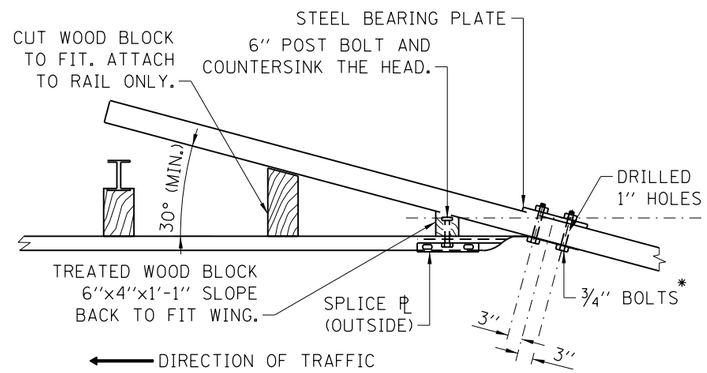

PLAN

FLARED WING

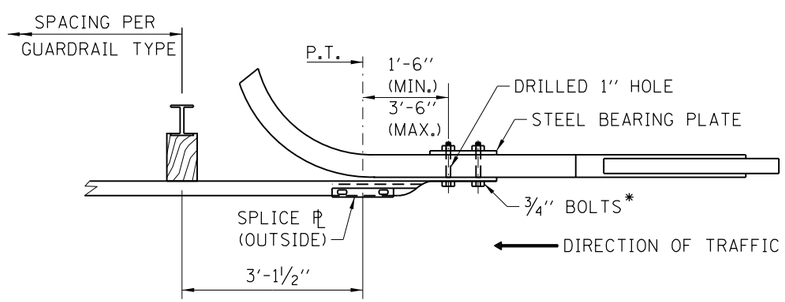

PLAN

CURVED WING

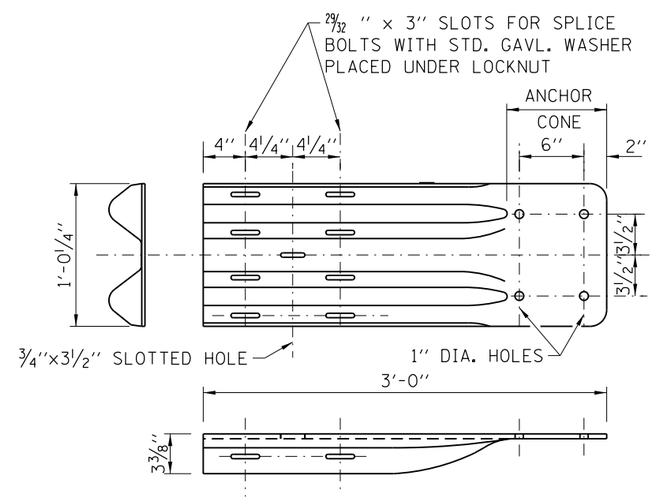

END SHOE

NOTES:

1. SEE ILLINOIS TOLLWAY STANDARD DRAWING C1 FOR DETAILS OF GUARDRAIL NOT SHOWN.
2. THE 24 7/8'' TYPICAL RAIL HEIGHT IS MEASURED FROM EXISTING SURFACE 1'-0'' IN FRONT OF RAIL, OR FROM EDGE OF SHOULDER/EDGE OF GUTTER WHEN EDGE IS MORE THAN 1'-0'' IN FRONT OF RAIL TO CENTER OF RAIL.
3. THE TRAFFIC BARRIER TERMINAL, TYPE T10 IS TYPICALLY UTILIZED TO CONNECT GALVANIZED STEEL PLATE BEAM GUARDRAIL TO THE DEPARTING END OF AN EXISTING BRIDGE CONCRETE WING WALL OR PARAPET.
4. UNDER NO CIRCUMSTANCES SHALL AN EXISTING TERMINAL, THAT WAS DESIGNED USING A PREVIOUS STANDARD, BE ATTACHED TO OR MODIFIED IN ANYWAY FROM ITS ORIGINAL DESIGN. IF ANY MODIFICATION IS REQUIRED AND A PROPER BARRIER WARRANT HAS BEEN COMPLETED, THE ENTIRE BARRIER INSTALLATION SHALL BE COMPLETELY REMOVED AND REPLACED WITH A NEW SYSTEM THAT CONFORMS TO THE CURRENT STANDARD.
5. TRAFFIC BARRIER TERMINAL SHALL BE IN ACCORDANCE WITH THE ILLINOIS TOLLWAY'S DETAILS AND SPECIFICATIONS. NO MODIFICATIONS SHALL BE PERMITTED.
6. WHEN END SHOE IS ATTACHED TO A BRIDGE PARAPET WHICH HAS AN EXPANSION JOINT, THE BOLTS SHALL BE PROVIDED WITH A LOCKNUT OR DOUBLE NUT AND SHALL BE TIGHTENED ONLY TO A POINT THAT WILL ALLOW GUARDRAIL MOVEMENT.
7. THE ANCHOR CONE SHALL BE SET FLUSH WITH THE SURFACE OF THE CONCRETE.
8. EXTERNALLY THREADED STUDS PROTRUDING FROM THE SURFACE OF THE CONCRETE SHALL NOT BE PERMITTED.
9. WHEN WING WALL THICKNESS IS GREATER THAN 18'' OR NOT ACCESSIBLE TO THE BACK SIDE, 4-3/4'' BOLTS SHALL BE ANCHORED INTO DRILLED HOLES, USING A CHEMICAL ADHESIVE. MINIMUM EMBEDMENT SHALL BE 10''. ANCHOR BOLTS WITH STANDARD WASHER SHALL BE USED. AFTER TIGHTENING, CUT THE ANCHOR BOLTS FLUSH WITH THE NUTS, AND DAMAGE THE NUTS TO PREVENT THEM FROM LOOSENING.

GENERAL NOTE:

* HEAD OF BOLT TO BE ON TRAFFIC SIDE. SEE DETAIL "A"

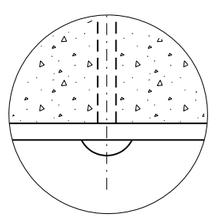

DETAIL "A"

DATE	REVISIONS
3-31-2017	REV'D ELEV PARAPET & FL WING ANGLE
3-31-2016	REVISED FLARED WING ANGLE.
3-11-2015	REVISED NOTES.
3-31-2014	REVISED NOTES.
2-07-2012	REVISED BOLT NOTE, ADDED DETAIL "A" AND REVISED NOTES.
1-01-2011	REVISED END SHOE HEIGHT ATTACHMENT
3-01-2010	REVISED NOTES, ADDED END SHOE AND PARAPET BEARING PLATE DETAIL.

Illinois Tollway

TRAFFIC BARRIER TERMINAL, TYPE T10

STANDARD C11-07

Paul Kovacs
APPROVED ..... CHIEF ENGINEER
DATE 7-1-2009

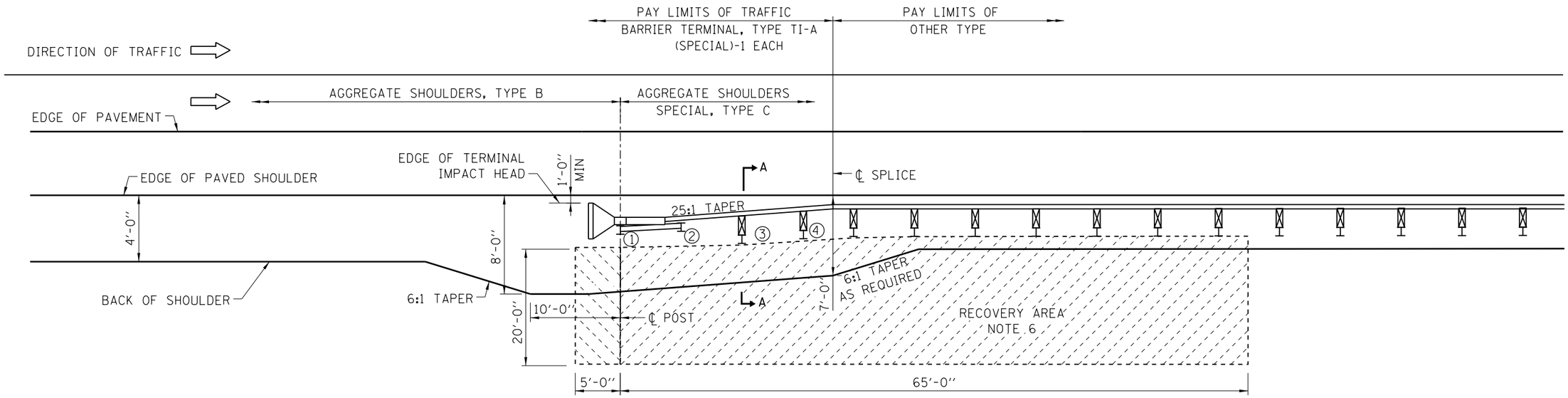

SHOULDER WIDENING TRANSITION - WITHOUT GUTTER
FOR TRAFFIC BARRIER TERMINAL, TYPE T1-A (SPECIAL)

GENERAL NOTES:

1. ALL SLOPE RATIOS ARE EXPRESSED AS UNITS OF VERTICAL DISPLACEMENT TO UNITS OF HORIZONTAL DISPLACEMENT (V:H).

2. THE TRAFFIC BARRIER TERMINAL, TYPE T1-A (SPECIAL) IS THE UPSTREAM END SECTION OF A GALVANIZED STEEL PLATE BEAM GUARDRAIL BARRIER SYSTEM, FOR RAMP INSTALLATION WITH DESIGN SPEED LIMIT OF 40 MPH OR LESS, AASHTO MASH, TEST LEVEL (TL-2).

3. REFERENCE ILLINOIS TOLLWAY STANDARD DRAWING B29 FOR GUTTER TRANSITION AT TRAFFIC BARRIER TERMINAL, TYPE T1-A (SPECIAL), AND MINIMUM DISTANCE FROM EDGE OF PAVED SHOULDER TO FACE OF RAIL.

4. UNDER NO CIRCUMSTANCES SHALL AN EXISTING TERMINAL, THAT WAS DESIGNED USING A PREVIOUS STANDARD, BE ATTACHED TO OR MODIFIED IN ANYWAY FROM ITS ORIGINAL DESIGN. IF ANY MODIFICATION IS REQUIRED AND A PROPER BARRIER WARRANT HAS BEEN COMPLETED, THE ENTIRE BARRIER INSTALLATION SHALL BE COMPLETELY REMOVED AND REPLACED WITH A NEW SYSTEM THAT CONFORMS TO THE CURRENT STANDARD.

5. TRAFFIC BARRIER TERMINAL SHALL BE IN ACCORDANCE WITH THE MANUFACTURER'S DETAILS AND SPECIFICATIONS.

6. NO ABOVE-GROUND ROADSIDE OBSTACLE OF ANY TYPE-FIXED OR BREAKAWAY, EITHER TEMPORARY OR PERMANENT SHALL BE ALLOWED WITHIN THIS RECOVERY AREA.

7. ON TANGENT ROADWAY: TRAFFIC BARRIER TERMINAL SHALL BE INSTALLED AT A 25:1 TAPER MEASURED FROM EDGE OF TRAVELED WAY.
   ON CURVED ROADWAY: THE EDGE OF THE TERMINAL IMPACT HEAD SHALL BE OFFSET A DISTANCE FROM A POINT ON THE BACK OF THE CURVED EDGE OF PAVED SHOULDER AS SHOWN IN TABLE 1. NO CURVED W-BEAM SECTIONS ARE PERMITTED WITHIN THE TERMINAL PAY LIMITS. THE TRAFFIC BARRIER TERMINAL, TYPE T1-A (SPECIAL) SHALL BE LAID OUT IN A STRAIGHT LINE.

8. TERMINAL POSTS SHALL NOT BE INSTALLED IN CONCRETE OR ASPHALT. WHEN NECESSARY USE LEAVE-OUT DETAIL SHOWN ON ILLINOIS TOLLWAY STANDARD DRAWING C1.

9. THE TERMINAL SYSTEM HAS BEEN PERFORMANCE-TESTED FOR CRASHWORTHINESS UNDER PROCEDURCES DEFINED IN AASHTO MASH. NO MODIFICATION TO THIS STANDARD DRAWING SHALL BE PERMITTED.

10. WHEN GUTTER IS PRESENT, DRAINAGE STRUCTURES SHALL NOT BE INSTALLED WITHIN THE TERMINAL LIMITS, BUT SHALL BE INSTALLED UPSTREAM AND DOWNSTREAM OF THE TERMINAL AS REQUIRED.

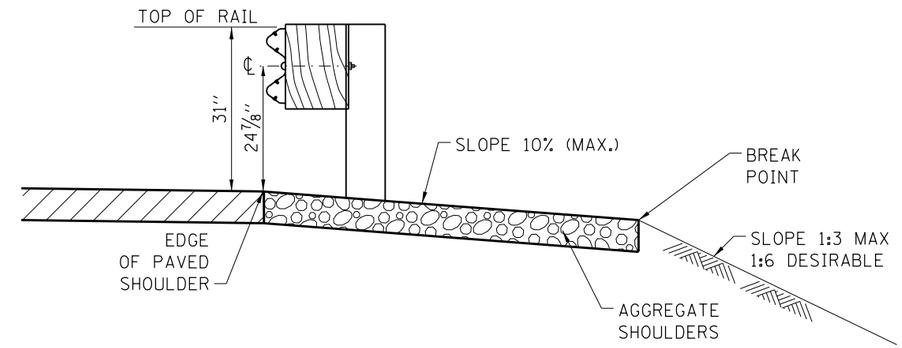

SECTION A-A

SHEET 1 OF 2

DATE	REVISIONS
3-01-2020	ADDED MOD. TO TABLE 1 & PLAN NOTE
3-01-2019	REVISE NOTES FOR MASH
3-01-2018	CORRECTED G-2 GUTTER REFERENCE
3-31-2017	REVISED SHOULDER WIDTH AT TERMINAL
3-31-2016	ADDED INSTALLATION NOTES IN NOTE 7
	AND REVISED SECTION A-A SHOULDER
3-11-2015	REVISED NOTES
3-31-2014	REVISED RECOVERY AREA DIMENSION.
3-01-2013	TERMINAL CHANGED TO ALL STEEL POST,
	REVISED TERMINAL PAY LIMITS

Illinois Tollway

SHOULDER WIDENING FOR TRAFFIC BARRIER TERMINAL, TYPE T1-A (SPECIAL)

STANDARD C12-10

Paul Kovacs
APPROVED ..... DATE 1-1-2011
CHIEF ENGINEERING OFFICER

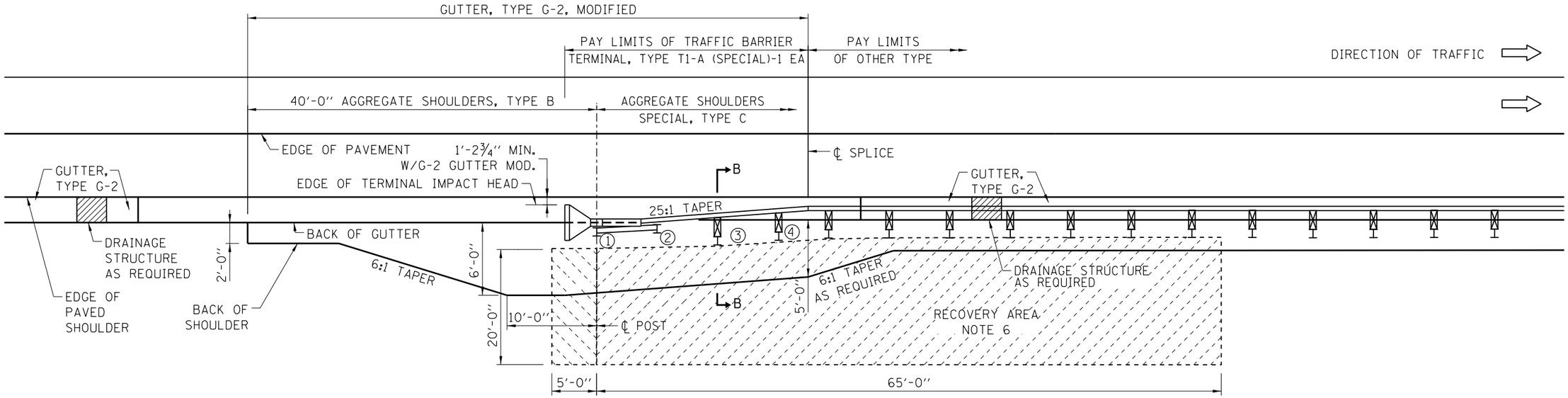

SHOULDER WIDENING TRANSITION - WITH GUTTER, TYPE G-2
FOR TRAFFIC BARRIER TERMINAL, TYPE T1-A (SPECIAL)

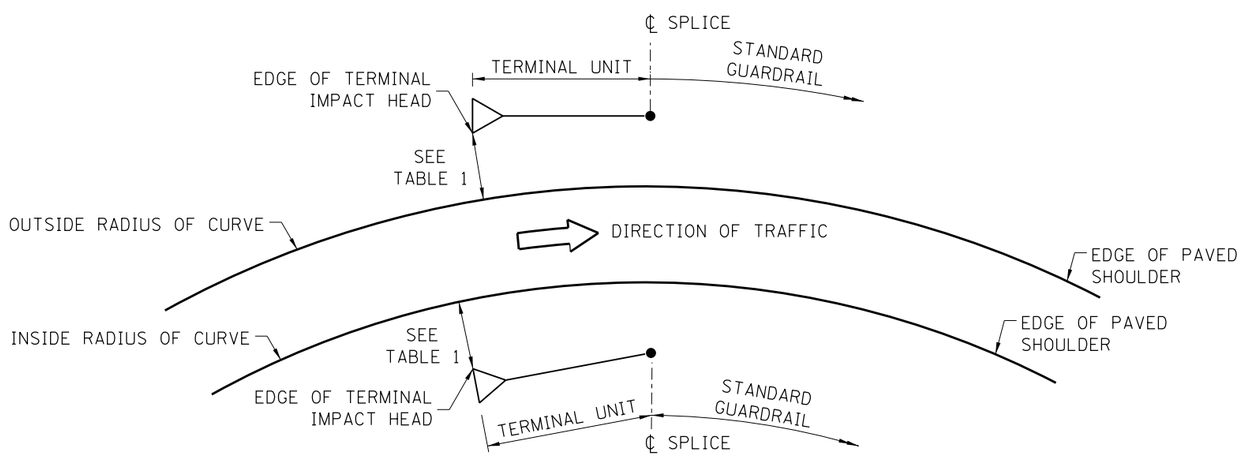

CURVED ROADWAY
TRAFFIC BARRIER TERMINAL PLACEMENT
(SEE NOTE 7)

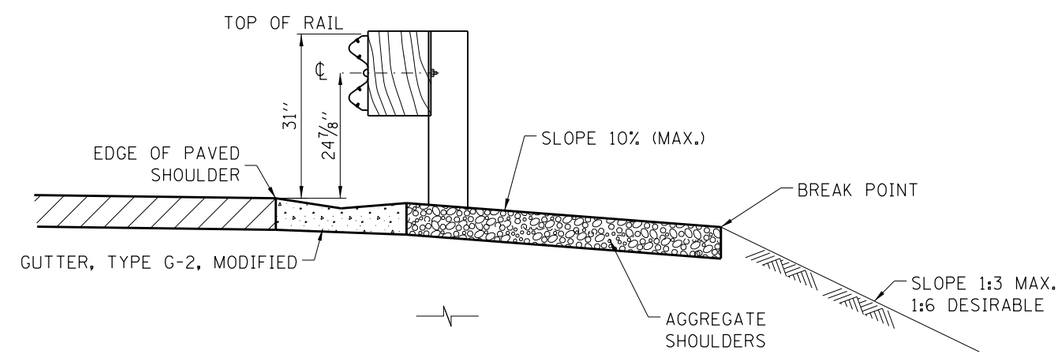

SECTION B-B

TABLE 1		
LATERAL OFFSET DIMENSION TO EDGE OF TERMINAL IMPACT HEAD		
	INSIDE RADIUS OF CURVE	OUTSIDE RADIUS OF CURVE
NO GUTTER	1'-0"	1'-0" *
GUTTER, TYPE G-2, MOD.	1'-2¾"	1'-2¾" MIN. *

(*) OFFSET DISTANCE WILL VARY BASED ON RADIUS OF HORIZONTAL CURVE AND THE TERMINAL BEING INSTALLED IN A STRAIGHT LINE.

NOTES:

SEE SHEET 1 OF THIS SERIES FOR NOTES.

Paul Kovacs
APPROVED ..... DATE 1-1-2011
CHIEF ENGINEERING OFFICER

Illinois Tollway

SHOULDER WIDENING FOR TRAFFIC BARRIER TERMINAL, TYPE T1-A (SPECIAL)

STANDARD C12-10

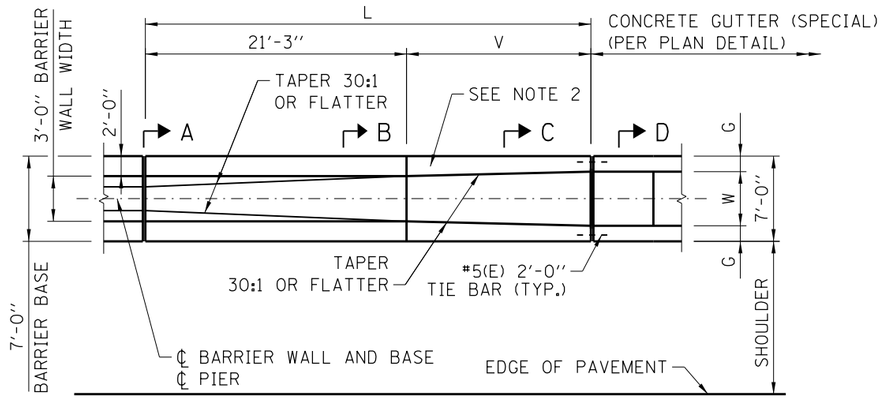

PLAN 1

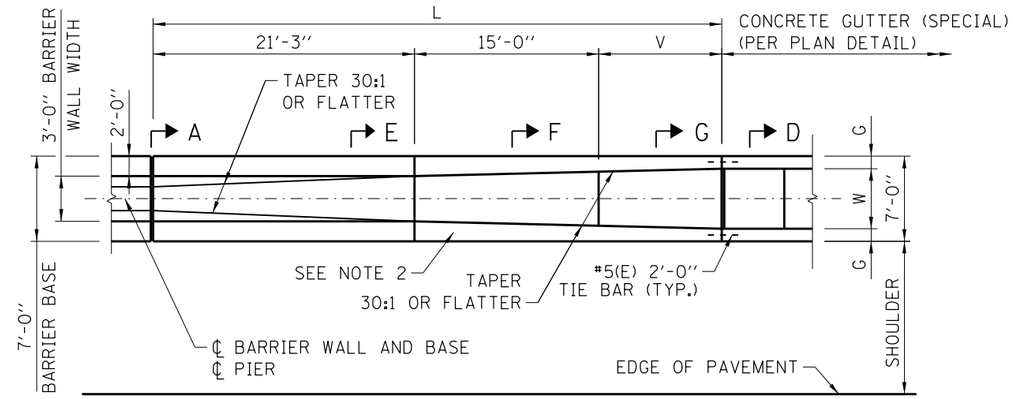

PLAN 2

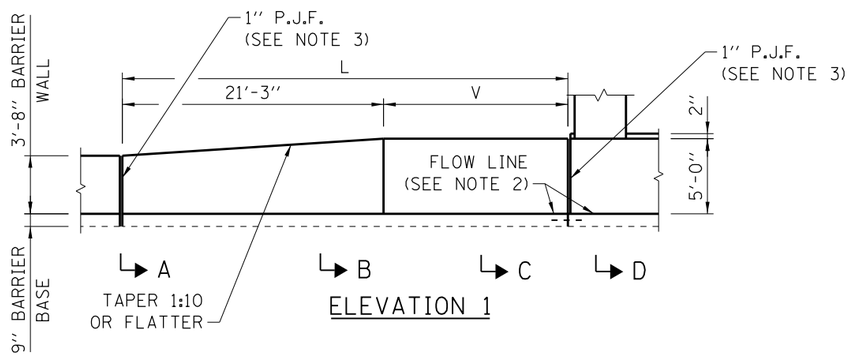

ELEVATION 1

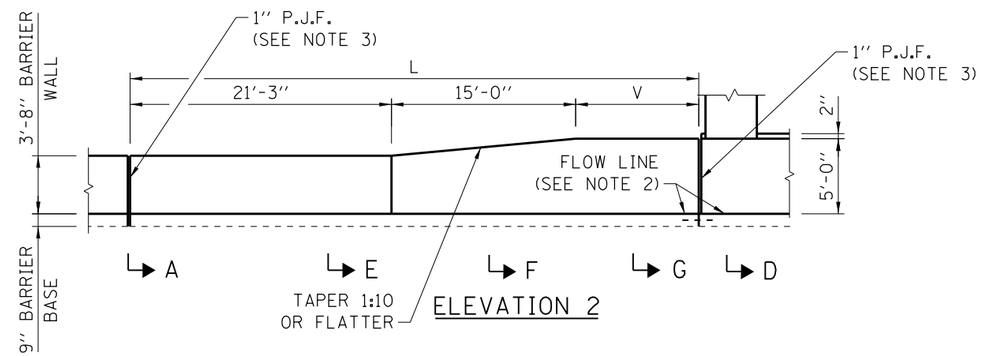

ELEVATION 2

CONCRETE MEDIAN BARRIER TRANSITION, TYPE V-DF
AT BRIDGE PIERS (FOR W ≤4'-0")

CONCRETE MEDIAN BARRIER TRANSITION, TYPE V-DF
AT BRIDGE PIERS (FOR W >4'-0")

NOTES:

1. 2" DEEP CONTRACTION JOINTS SHALL BE DONE BY SAWING AND SHALL BE CONSTRUCTED IN THE CONCRETE BARRIER WALL, CONCRETE BARRIER BASE, AND CONCRETE GUTTER (SPECIAL). CONTRACTION JOINTS SHALL ALSO BE CONSTRUCTED AT BOTH SIDES OF ALL DRAINAGE STRUCTURES. MAXIMUM CONTRACTION JOINT SPACING SHALL BE 30'-0". THE MINIMUM DISTANCE BETWEEN CONTRACTION JOINTS IN THE MEDIAN BARRIER WALL SHALL BE 2'-0". WHEN A DRAINAGE STRUCTURE FALLS WITHIN 2'-0" FROM AN EXPANSION JOINT (OR) CONTRACTION JOINT, THE NEAREST CONTRACTION JOINT SHALL BE OMITTED.

2. GUTTER PROFILE IN THE VICINITY OF SAG VERTICAL CURVES, ALONG FLAT GRADES AND AT THE MEETING OF PROPOSED AND EXISTING GUTTER, SHALL BE CAREFULLY CONTROLLED AND FIELD ADJUSTED IF NECESSARY TO ENSURE POSITIVE DRAINAGE AND AVOID PONDING.

3. NON-STAINING GRAY ONE COMPONENT NON-SAG ELASTOMERIC GUN GRADE POLYURETHANE SEALANT MEETING THE REQUIREMENTS OF ASTM C-920, TYPE S, GRADE NS, CLASS 25, USE T.

4. HOOK BARS SHALL BE INCLUDED IN THE COST OF THE VARIOUS BARRIER AND GUTTER ITEMS AND SHALL BE EPOXY COATED. HOOK BARS BETWEEN THE BARRIER AND BASE SHALL BE ON 15" CENTERS AND ALTERNATE LEFT AND RIGHT OF THE BARRIER CENTERLINE. SEE STANDARD C5 FOR "HOOK BAR" DETAIL.

TABLE OF VARIABLES

	W	L	V	G
PLAN 1	3'-0"	31'-3"	10'-0"	2'-0"
	3'-6"	31'-3"	10'-0"	1'-9"
	4'-0"	36'-3"	15'-0"	1'-6"
PLAN 2	4'-6"	46'-3"	10'-0"	1'-3"
	5'-0"	51'-3"	15'-0"	1'-0"
	5'-6"	58'-9"	22'-6"	9"
	6'-0"	66'-3"	30'-0"	6"

Paul Kovacs
APPROVED CHIEF ENGINEERING OFFICER DATE 2-7-2012

SHEET 1 OF 2

Illinois Tollway

DATE	REVISIONS
3-01-2022	REVISED SECTION A-A DIMENSIONS
3-01-2021	REVISED TO HOOK BARS
3-01-2019	REVISED TO CONSTANT SLOPE AT 44"
3-31-2016	MODIFIED NOTES
3-11-2015	MODIFIED MEDIAN BARRIER TRANSITION.
3-31-2014	MODIFIED BARRIER BASE.

CONCRETE MEDIAN BARRIER TRANSITION, TYPE V-DF AT BRIDGE PIERS

STANDARD C13-07

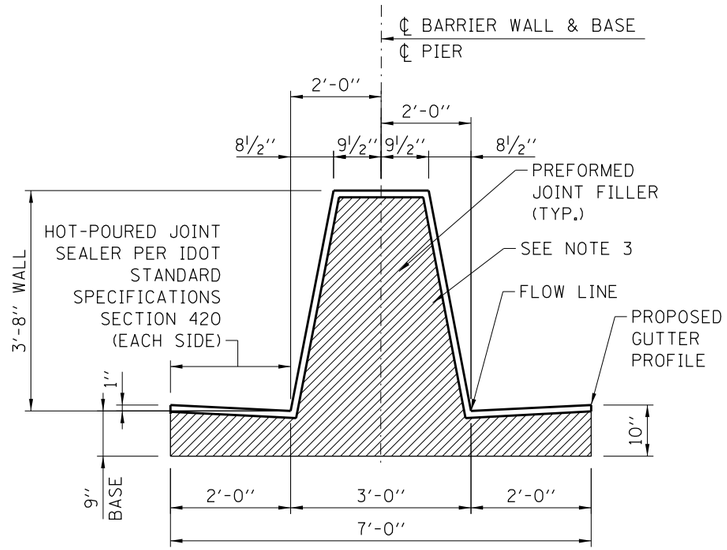

SECTION A-A

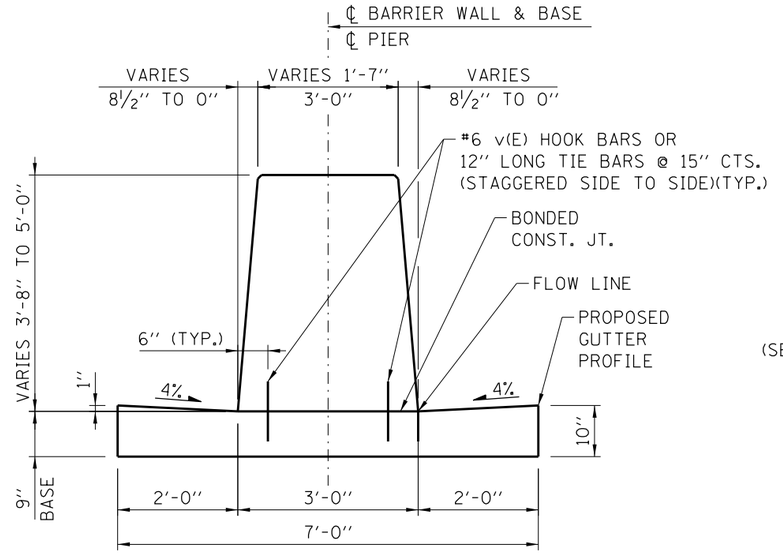

SECTION B-B

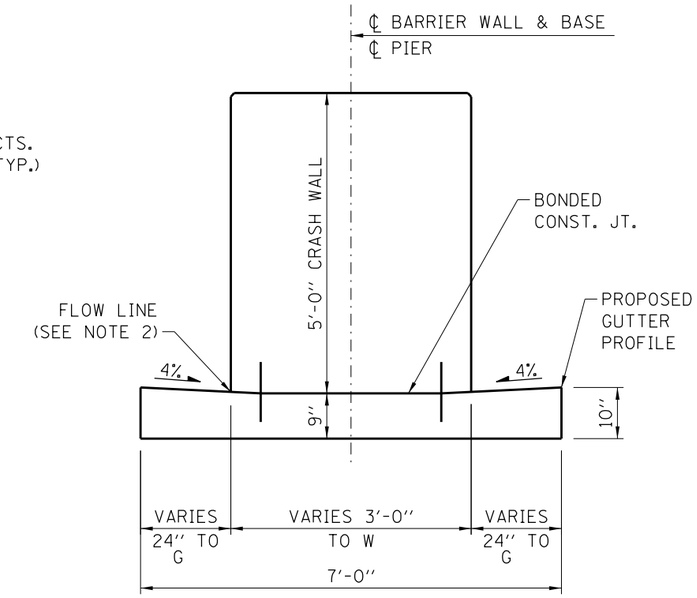

SECTION C-C

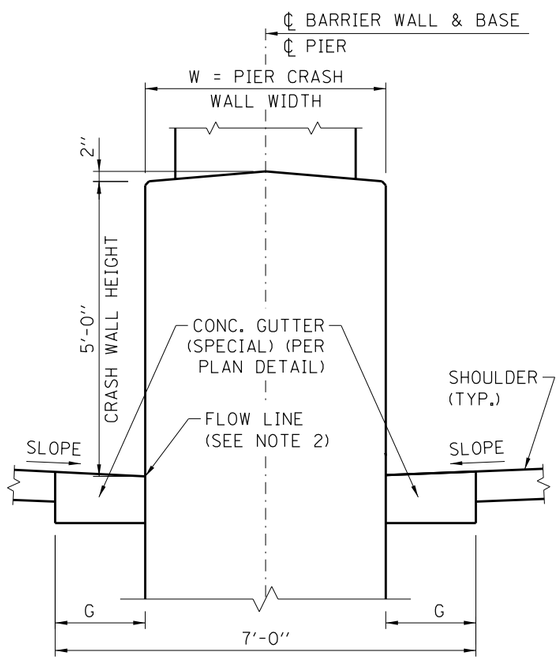

SECTION D-D

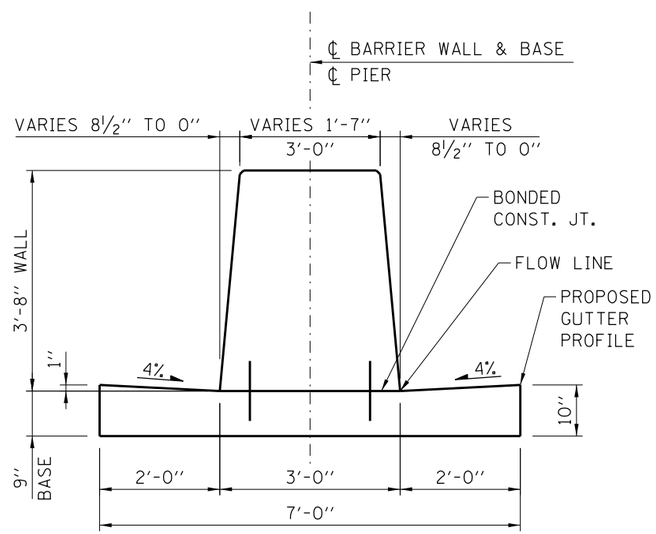

SECTION E-E

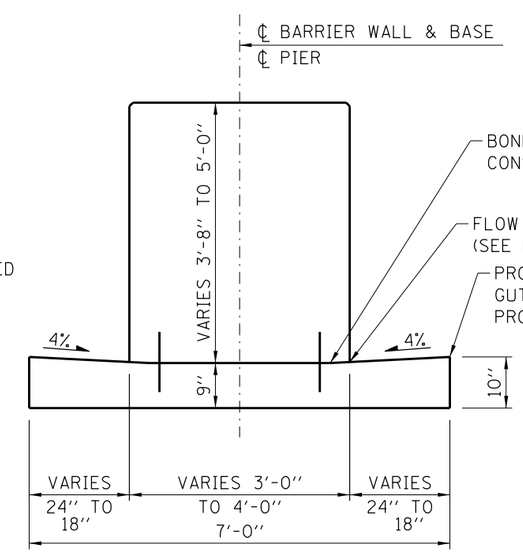

SECTION F-F

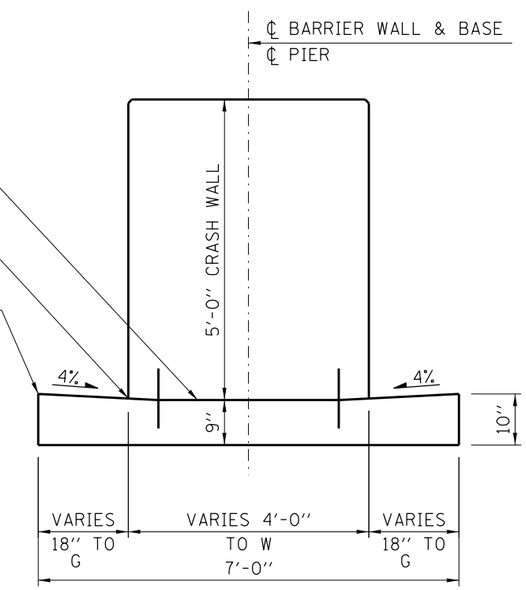

SECTION G-G

SHEET 2 OF 2

Illinois Tollway

CONCRETE MEDIAN BARRIER TRANSITION, TYPE V-DF AT BRIDGE PIERS

STANDARD C13-07

Paul Kovacs
APPROVED CHIEF ENGINEERING OFFICER
DATE 2-7-2012

NOTES:

SEE SHEET 1 OF THIS SERIES FOR NOTES.

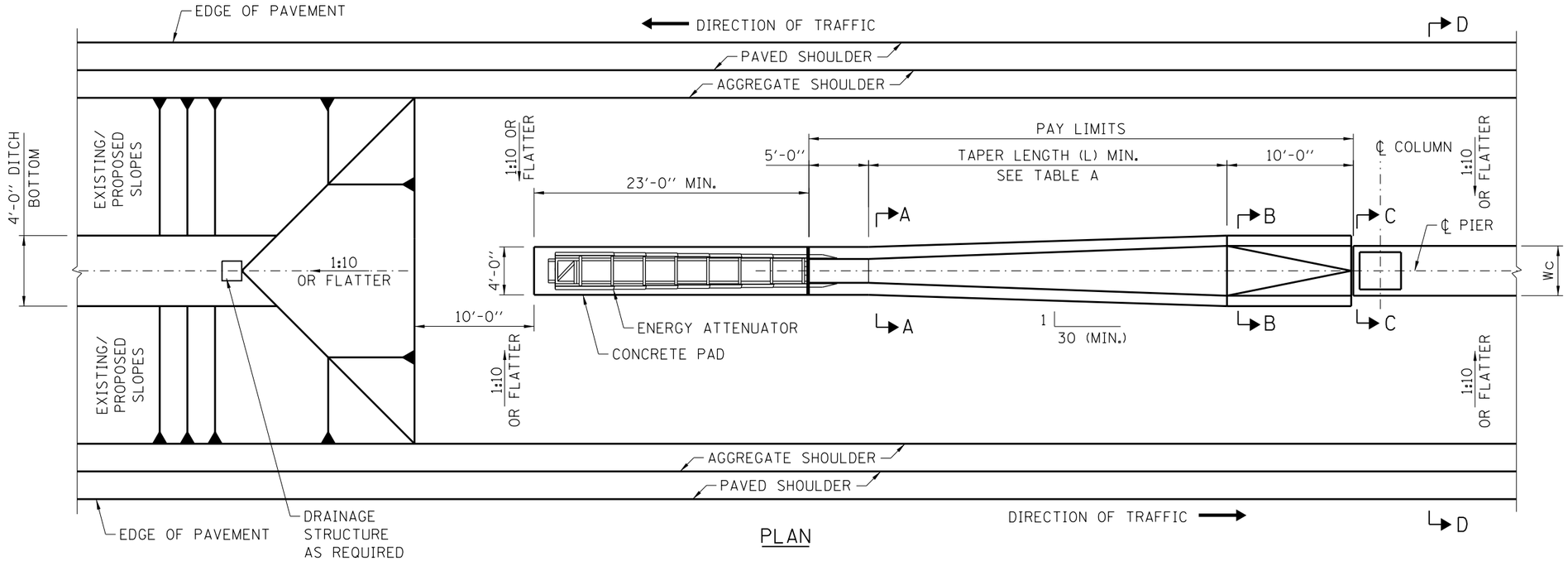

PLAN

TABLE A	
Wc	L (MIN.)
24"	20'-0"
24"<Wc<35"	25'-0"
35"<Wc<43"	35'-0"
43"<Wc<51"	45'-0"
51"<Wc<59"	55'-0"
59"<Wc<67"	65'-0"
67"<Wc<72"	75'-0"

Wc=PIER CRASH WALL WIDTH

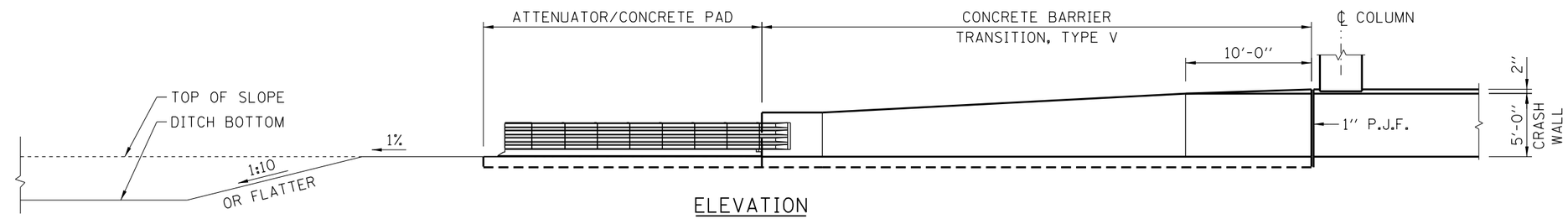

ELEVATION

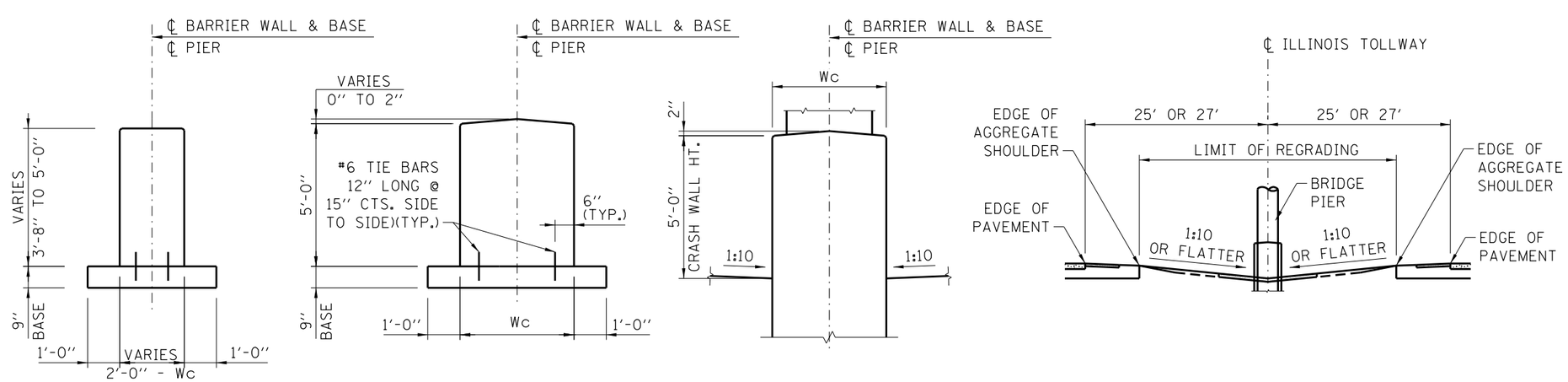

SECTION A-A

SECTION B-B

SECTION C-C

SECTION D-D

NOTES:

1. SLOPE RATIOS ARE EXPRESSED AS UNITS OF VERTICAL DISPLACEMENT TO UNITS OF HORIZONTAL DISPLACEMENT (V:H).
2. ENERGY ATTENUATOR AND PAD SHALL BE IN ACCORDANCE WITH THE MANUFACTURER'S DETAILS AND SPECIFICATIONS.
3. 2" DEEP CONTRACTION JOINTS SHALL BE DONE BY SAWING AND SHALL BE CONSTRUCTED IN THE CONCRETE BARRIER WALL, AND CONCRETE BARRIER BASE. MAXIMUM CONTRACTION JOINT SPACING SHALL BE 30'-0". THE MINIMUM DISTANCE BETWEEN CONTRACTION JOINTS IN THE MEDIAN BARRIER WALL SHALL BE 2'-0".

Paul Kovacs
APPROVED CHIEF ENGINEERING OFFICER
DATE 3-31-2014

DATE	REVISIONS
3-01-2021	ADDED TIE BARS
3-01-2020	CORRECTED HEIGHT IN SECTION A-A
3-01-2019	REVISED ATTENUATOR
3-31-2016	ADDED SEC. B-B TOP, DITCH ELEV. VIEW AND REVISED NOTE 3
3-11-2015	REVISED NOTES

Illinois Tollway

CONCRETE MEDIAN BARRIER TRANSITION, TYPE V AT BRIDGE PIERS

STANDARD C14-05

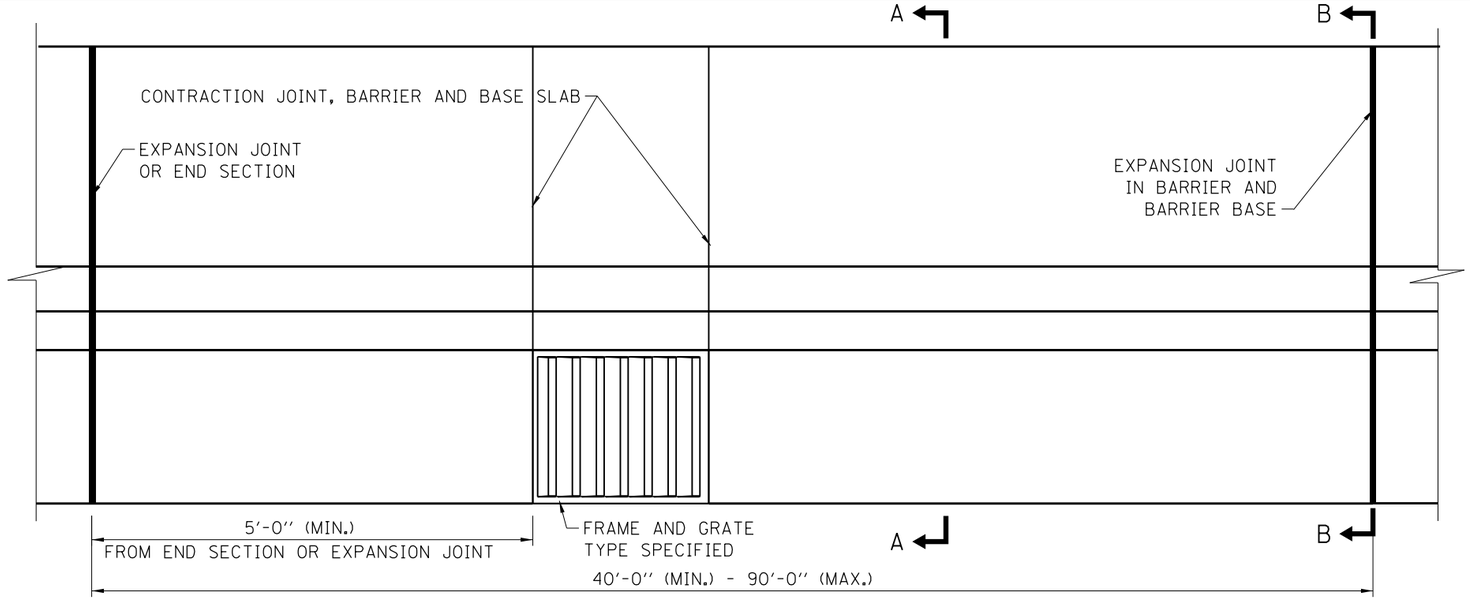

PLAN

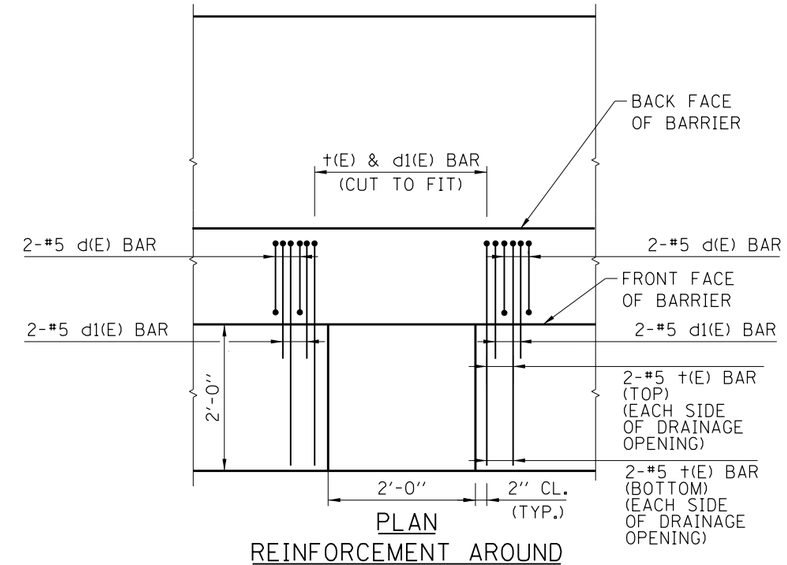

PLAN
REINFORCEMENT AROUND DRAINAGE STRUCTURE

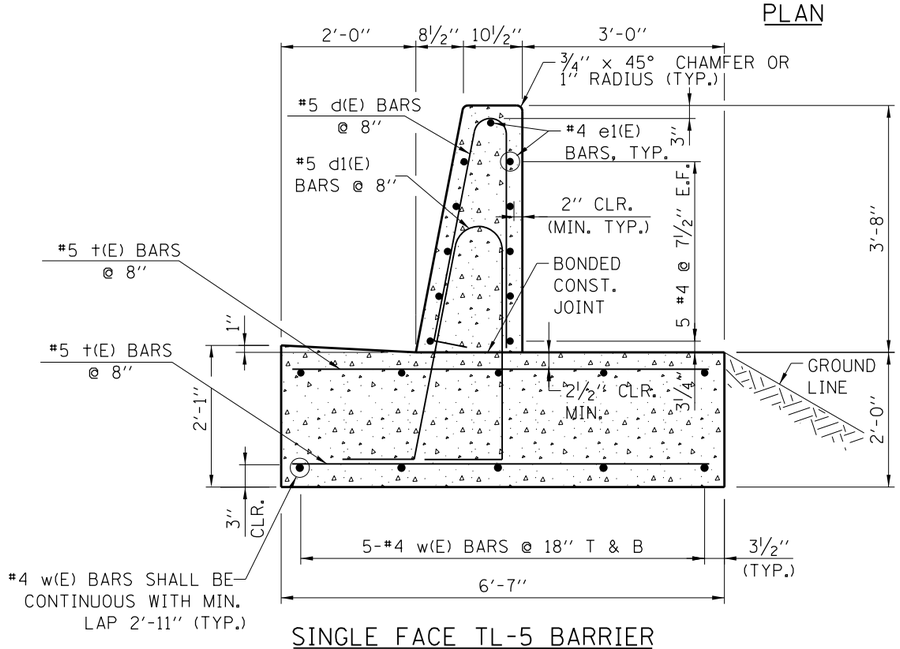

SINGLE FACE TL-5 BARRIER
SECTION A-A

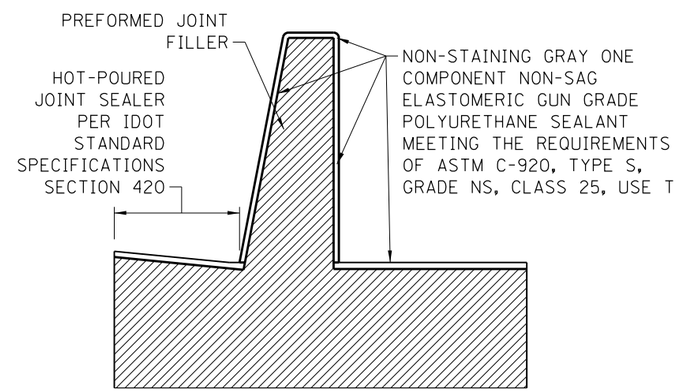

SINGLE FACE 44'' BARRIER
EXPANSION JOINT
SECTION B-B

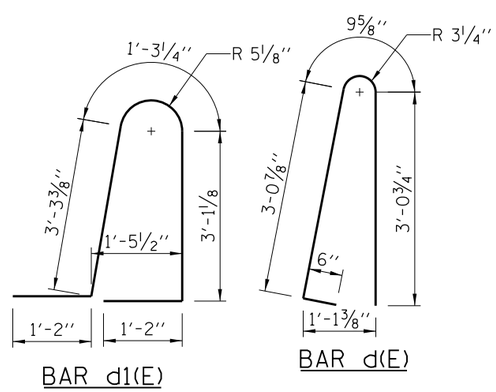

BENDING DIAGRAMS

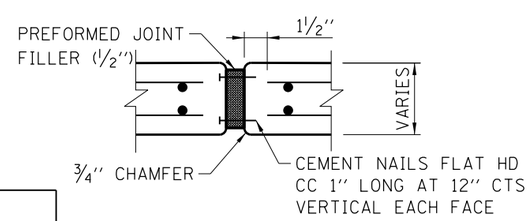

EXPANSION JOINT

NOTES:

1. THIS IS A REINFORCED CONCRETE TL-5 ROADSIDE BARRIER USED TO SHIELD DROP-OFFS AND STRUCTURES WHEN THE TOE OF THE TRAFFIC FACE IS GREATER THAN 10' FROM THE STRUCTURE FACE. THE MINIMUM LENGTH OF INSTALLATION SHALL BE 40'-0''. BASIS OF DESIGN: IL TOLLWAY STRUCTURE DESIGN MANUAL.
2. TOP SHOULDER EDGE OF BARRIER BASE GUTTER SHALL MATCH THE TOP OF SHOULDER ELEVATION.
3. 1'' DEEP CONTRACTION JOINTS SHALL BE CONSTRUCTED IN BOTH THE REINFORCED CONCRETE BARRIER WALL AND BASE. CONTRACTION JOINTS SHALL ALSO BE CONSTRUCTED AT BOTH SIDES OF ALL DRAINAGE STRUCTURES. MAXIMUM CONTRACTION JOINT SPACING SHALL BE 30'-0''.
4. CONTRACTION JOINTS SHALL BE FORMED BY A GROOVE ⅛'', EITHER IN THE PLASTIC CONCRETE OR SAWED AFTER THE CONCRETE HAS SET.
5. REINFORCEMENT BARS DESIGNATED ''(E)'' SHALL BE EPOXY COATED.
6. REINFORCEMENT BARS BENDING DETAILS SHALL BE IN ACCORDANCE WITH THE ''MANUAL OF STANDARD PRACTICE FOR DETAILING REINFORCED CONCRETE STRUCTURES'', ACI 315, LATEST EDITION. REINFORCEMENT BAR BENDING DIMENSIONS ARE OUT TO OUT. E.F. DENOTES EACH FACE.
7. AT DRAINAGE STRUCTURES, CUT FOOTING BARS TO FIT. ADD AN ADDITIONAL PAIR OF d, d1 AND † BARS ON EACH SIDE OF THE DRAINAGE STRUCTURE.
8. EXPANSION JOINTS SHALL BE CONSTRUCTED IN BARRIER WALL AT A MAXIMUM JOINT SPACING OF 90'-0'' AND A MINIMUM JOINT SPACING OF 40'-0''. SEE SECTION B-B FOR DETAILS.
9. WHEN SPECIFIED IN THE PLANS, THE BACKSIDE OF THE BARRIER BASE MAY BE LEFT EXPOSED A MAXIMUM OF 1', MEASURED FROM THE TOP OF THE BARRIER BASE.

DATE	REVISIONS
3-01-2022	REVISED NOTES & CALLOUTS
3-01-2020	REVISED NAME & REINFORCING

Illinois Tollway

CONCRETE BARRIER SINGLE FACE, REINFORCED TL-5, T-SHAPE 44 INCH

STANDARD C15-02

APPROVED Paul Kovacs
CHIEF ENGINEERING OFFICER
DATE 3-1-2019

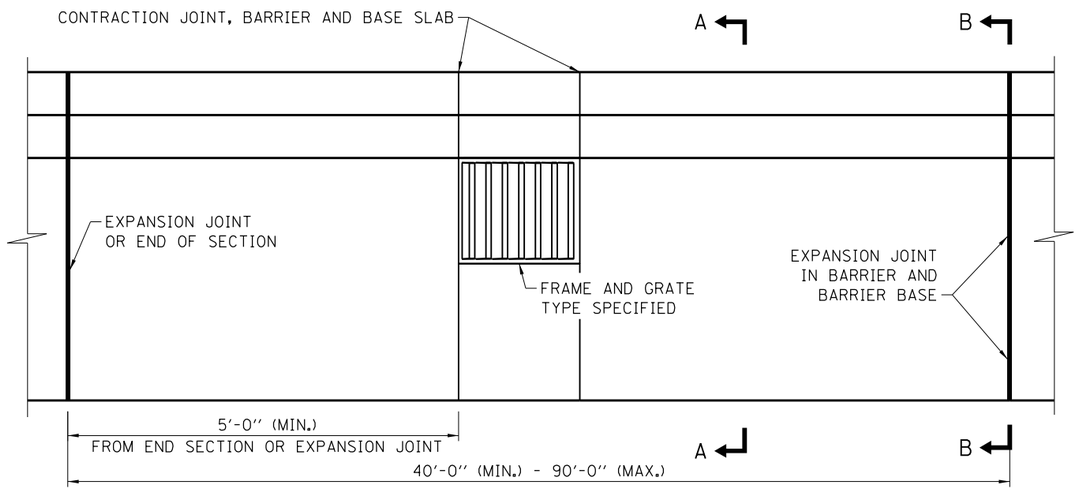

PLAN

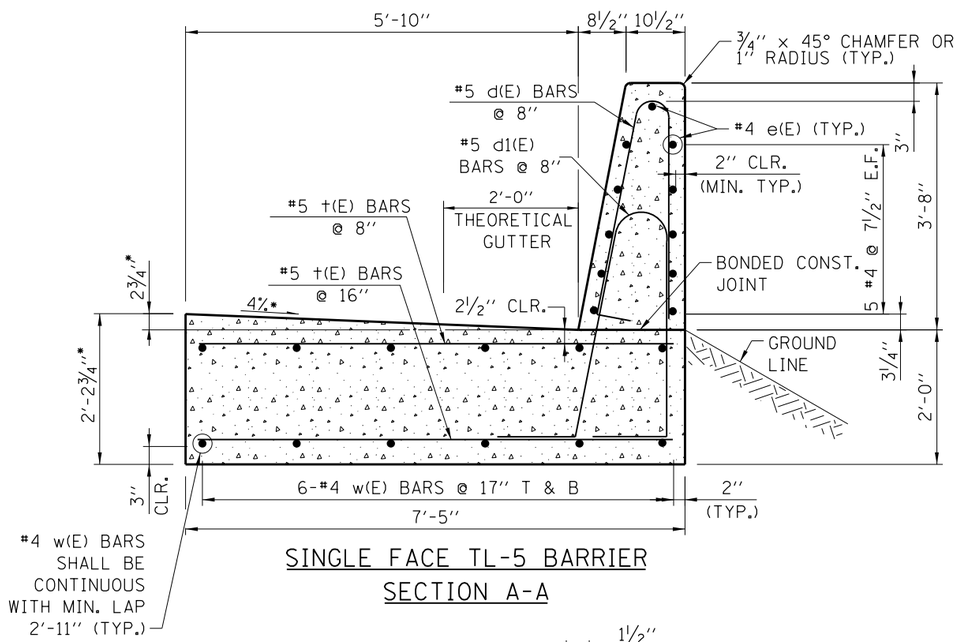

SINGLE FACE TL-5 BARRIER
SECTION A-A

* OR AS REQUIRED TO MATCH SHOULDER CROSS SLOPE

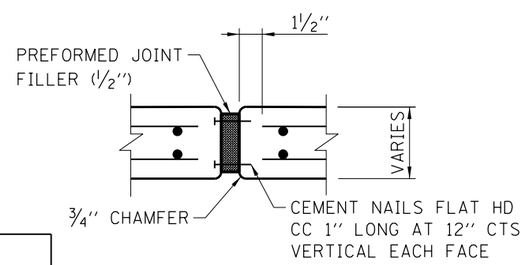

EXPANSION JOINT

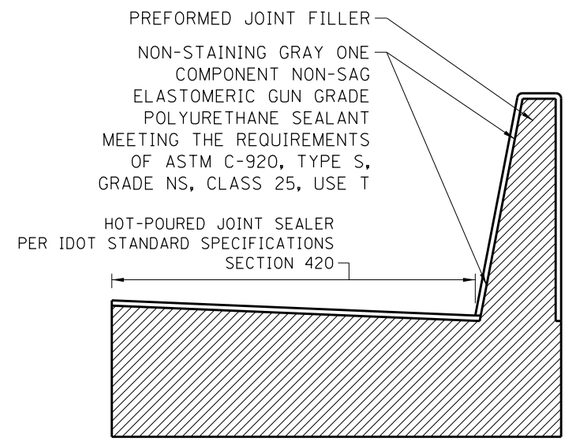

SINGLE FACE 44" BARRIER
EXPANSION JOINT
SECTION B-B

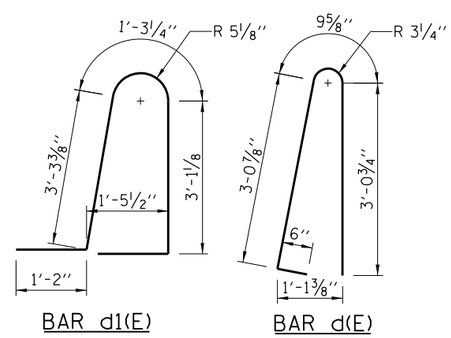

BENDING DIAGRAMS

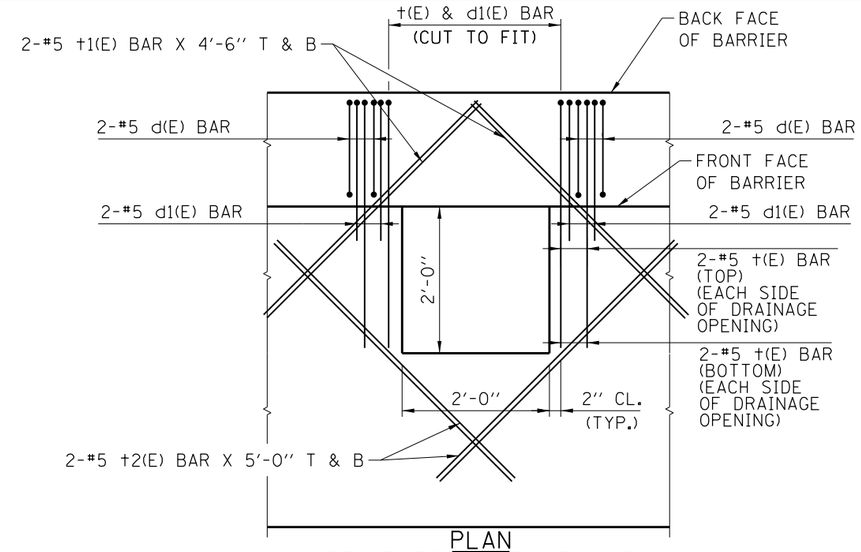

PLAN
REINFORCEMENT AROUND
DRAINAGE STRUCTURE

NOTES:

1. THIS IS A REINFORCED CONCRETE TL-5 ROADSIDE BARRIER USED TO SHIELD DROP-OFFS AND STRUCTURES WHEN THE TOE OF THE TRAFFIC FACE IS GREATER THAN 10' FROM THE STRUCTURE FACE. THE MINIMUM LENGTH OF INSTALLATION SHALL BE 40'-0". BASIS OF DESIGN: IL TOLLWAY STRUCTURE DESIGN MANUAL.
2. TOP SHOULDER EDGE OF BARRIER BASE GUTTER SHALL MATCH THE TOP OF SHOULDER ELEVATION.
3. 1" DEEP CONTRACTION JOINTS SHALL BE CONSTRUCTED IN BOTH THE REINFORCED CONCRETE BARRIER WALL AND BASE. CONTRACTION JOINTS SHALL ALSO BE CONSTRUCTED AT BOTH SIDES OF ALL DRAINAGE STRUCTURES. MAXIMUM CONTRACTION JOINT SPACING SHALL BE 30'-0".
4. CONTRACTION JOINTS SHALL BE FORMED BY A GROOVE ⅛", EITHER IN THE PLASTIC CONCRETE OR SAWED AFTER THE CONCRETE HAS SET.
5. REINFORCEMENT BARS DESIGNATED "(E)" SHALL BE EPOXY COATED.
6. REINFORCEMENT BARS BENDING DETAILS SHALL BE IN ACCORDANCE WITH THE "MANUAL OF STANDARD PRACTICE FOR DETAILING REINFORCED CONCRETE STRUCTURES", ACI 315, LATEST EDITION. REINFORCEMENT BAR BENDING DIMENSIONS ARE OUT TO OUT. E. F. DENOTES EACH FACE.
7. AT DRAINAGE STRUCTURES, CUT FOOTING BARS TO FIT. ADD AN ADDITIONAL PAIR OF d, d1 AND † BARS ON EACH SIDE OF THE DRAINAGE STRUCTURE.
8. EXPANSION JOINTS SHALL BE CONSTRUCTED IN BARRIER WALL AT A MAXIMUM JOINT SPACING OF 90'-0" AND A MINIMUM JOINT SPACING OF 40'-0". SEE SECTION B-B FOR DETAILS.
9. WHEN SPECIFIED IN THE PLANS, THE BACKSIDE OF THE BARRIER BASE MAY BE LEFT EXPOSED A MAXIMUM OF 1', MEASURED FROM THE TOP OF THE BARRIER BASE.

DATE	REVISIONS
3-01-2022	REVISED NOTES & CALLOUTS
3-01-2020	REVISED TITLE & STEM THICKNESS

Illinois Tollway

CONCRETE BARRIER SINGLE FACE, REINFORCED TL-5, L-SHAPE 44 INCH

STANDARD C16-02

Paul Kovacs
APPROVED CHIEF ENGINEERING OFFICER DATE 3-1-2019

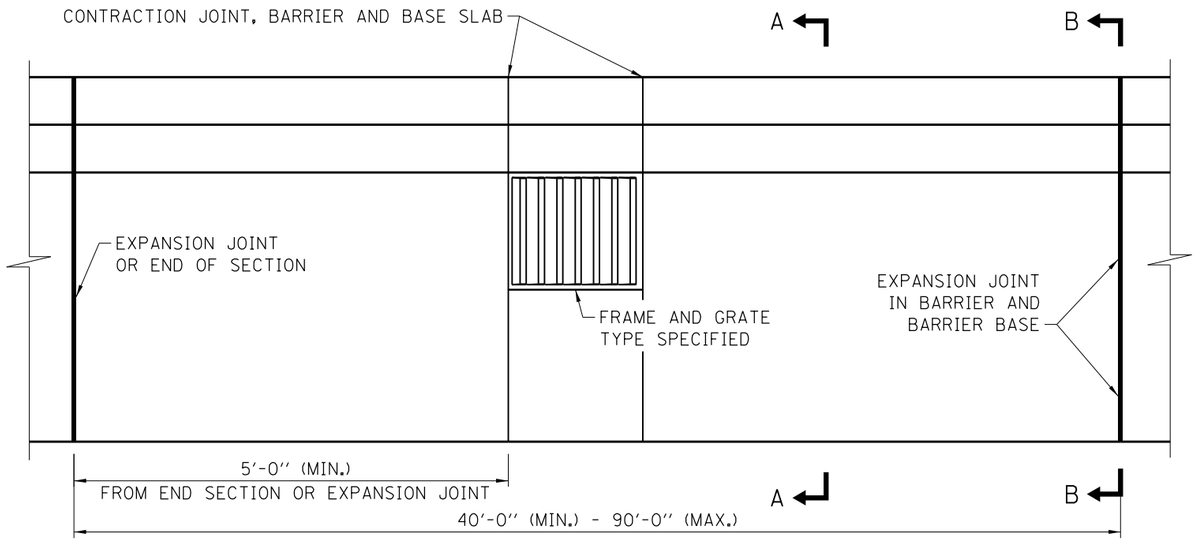

PLAN

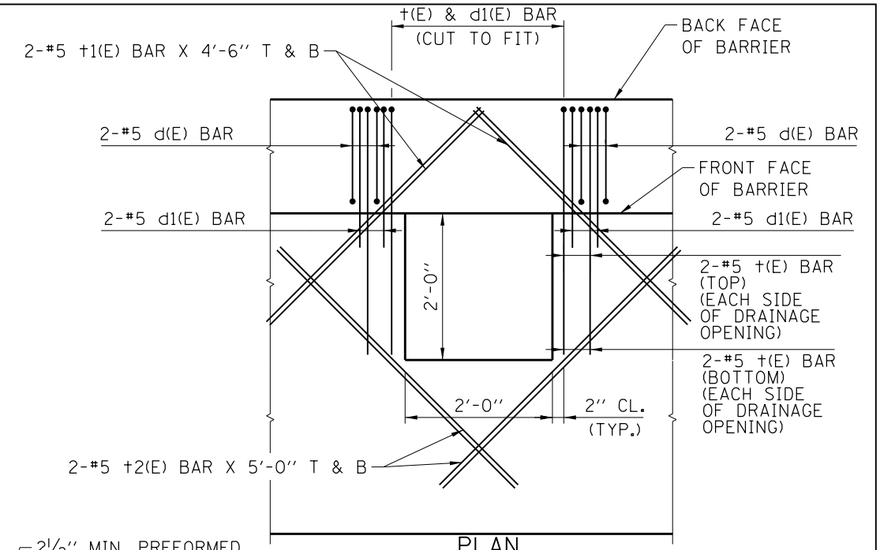

PLAN

REINFORCEMENT AROUND DRAINAGE STRUCTURE

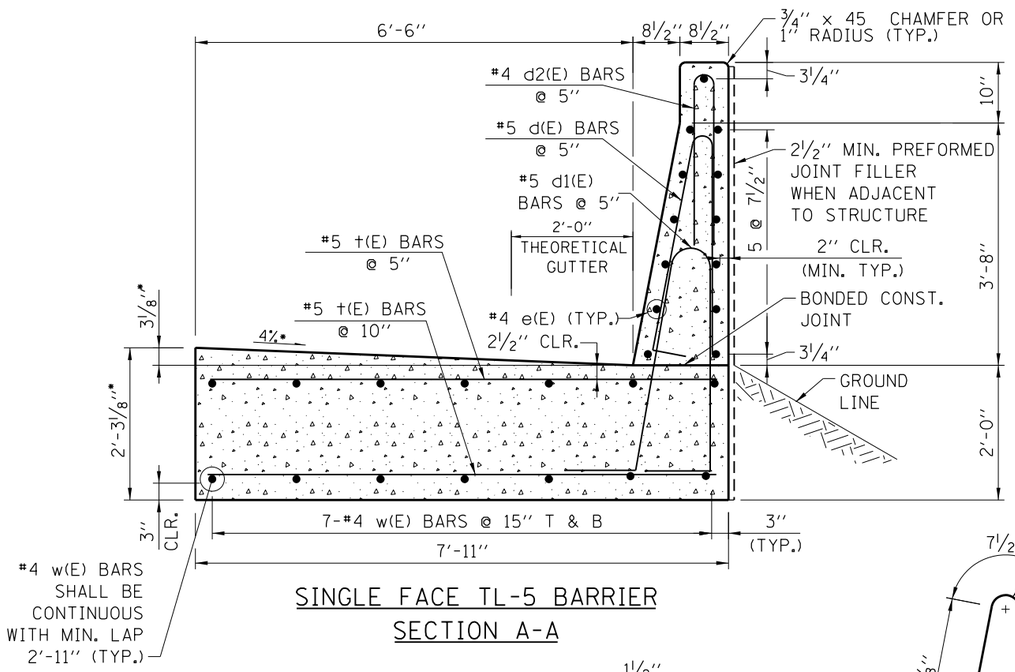

* OR AS REQUIRED TO MATCH SHOULDER CROSS SLOPE

SINGLE FACE TL-5 BARRIER

SECTION A-A

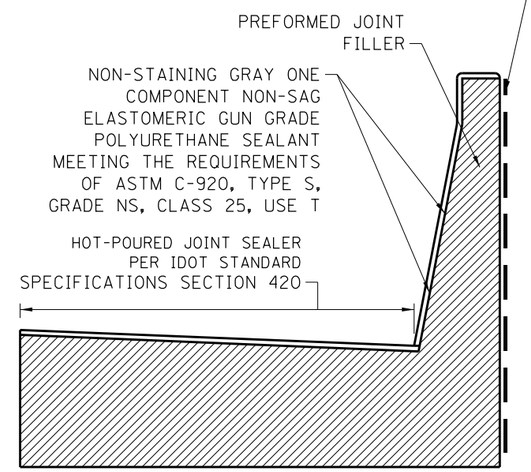

SINGLE FACE 54" BARRIER

EXPANSION JOINT

SECTION B-B

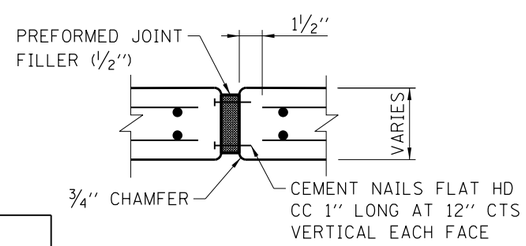

EXPANSION JOINT

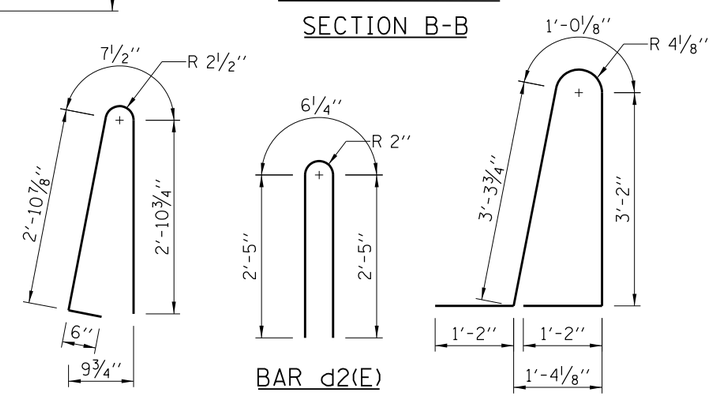

BAR d(E) BAR d2(E) BAR d1(E)

BENDING DIAGRAMS

NOTES:

1. THIS IS A REINFORCED CONCRETE TL-5 ROADSIDE BARRIER USED TO SHIELD BRIDGE PIERS AND ABUTMENTS WHEN THE BARRIER IS ADJACENT TO THE FACE OF THE STRUCTURE. THE MINIMUM LENGTH OF INSTALLATION SHALL BE 40'-0". BASIS OF DESIGN: IL TOLLWAY STRUCTURE DESIGN MANUAL.
2. TOP SHOULDER EDGE OF BARRIER BASE GUTTER SHALL MATCH THE TOP OF SHOULDER ELEVATION.
3. 1" DEEP CONTRACTION JOINTS SHALL BE CONSTRUCTED IN BOTH THE REINFORCED CONCRETE BARRIER WALL AND BASE. CONTRACTION JOINTS SHALL ALSO BE CONSTRUCTED AT BOTH SIDES OF ALL DRAINAGE STRUCTURES. MAXIMUM CONTRACTION JOINT SPACING SHALL BE 30'-0".
4. CONTRACTION JOINTS SHALL BE FORMED BY A GROOVE ⅛", EITHER IN THE PLASTIC CONCRETE OR SAWED AFTER THE CONCRETE HAS SET.
5. REINFORCEMENT BARS DESIGNATED "(E)" SHALL BE EPOXY COATED.
6. REINFORCEMENT BARS BENDING DETAILS SHALL BE IN ACCORDANCE WITH THE "MANUAL OF STANDARD PRACTICE FOR DETAILING REINFORCED CONCRETE STRUCTURES", ACI 315, LATEST EDITION. REINFORCEMENT BAR BENDING DIMENSIONS ARE SHOWN OUT TO OUT.
7. AT DRAINAGE STRUCTURES, CUT FOOTING BARS TO FIT. ADD AN ADDITIONAL PAIR OF d, d1, d2, †, AND †1 BARS ON EACH SIDE OF THE DRAINAGE STRUCTURE.
8. EXPANSION JOINTS SHALL BE CONSTRUCTED IN BARRIER WALL AT A MAXIMUM JOINT SPACING OF 90'-0" AND A MINIMUM JOINT SPACING OF 40'-0". SEE SECTION B-B FOR DETAILS.
9. WHEN SPECIFIED IN THE PLANS, THE BACKSIDE OF THE BARRIER BASE MAY BE LEFT EXPOSED A MAXIMUM OF 1', MEASURED FROM THE TOP OF THE BARRIER BASE.

DATE	REVISIONS
3-01-2022	REVISED NOTE 4.
3-01-2021	REVISED REBAR LENGTH, ADDED NOTE
3-01-2020	REVISED NAME, ADDED NOTE

Illinois Tollway

CONCRETE BARRIER
SINGLE FACE, REINFORCED
TL-5, 54 INCH

STANDARD C17-03

APPROVED Paul Kovacs
CHIEF ENGINEERING OFFICER
DATE 3-1-2019

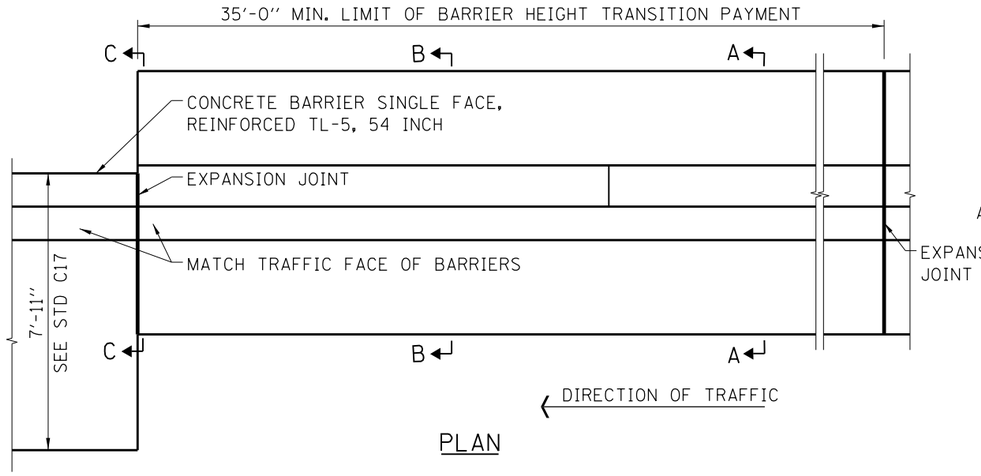

PLAN

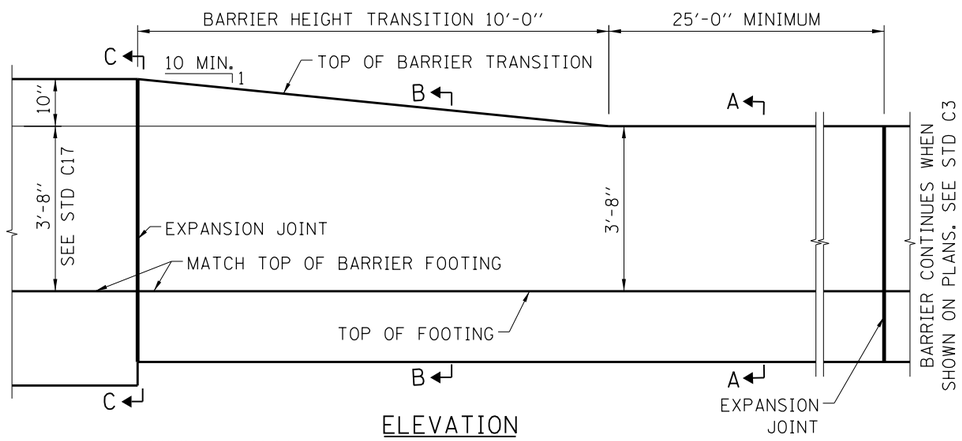

ELEVATION

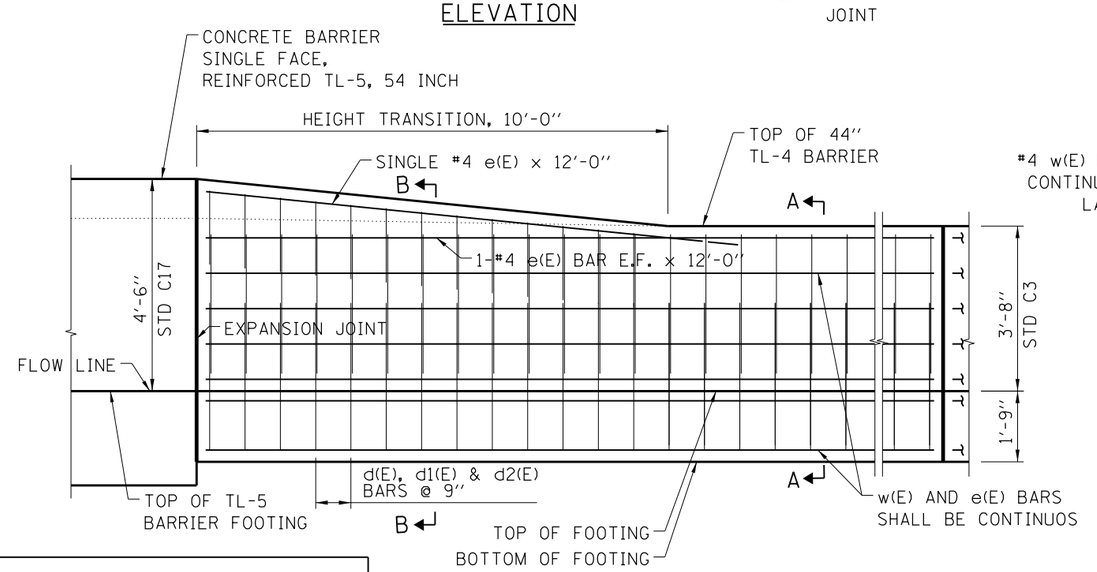

REINFORCEMENT ELEVATION

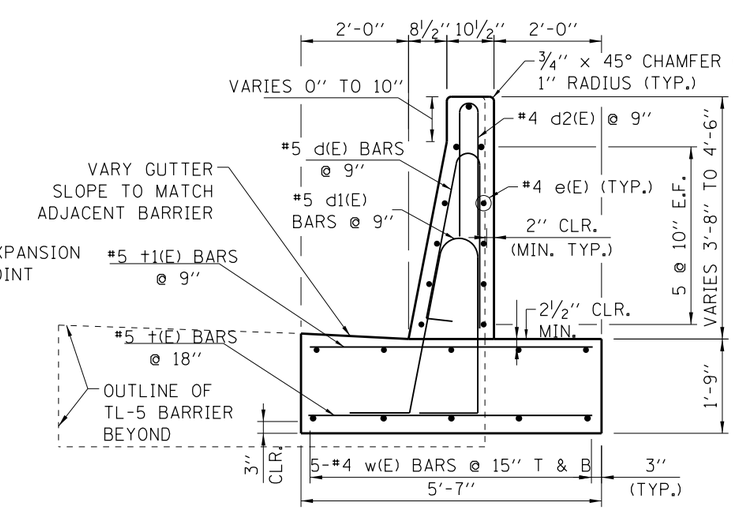

SECTION B-B

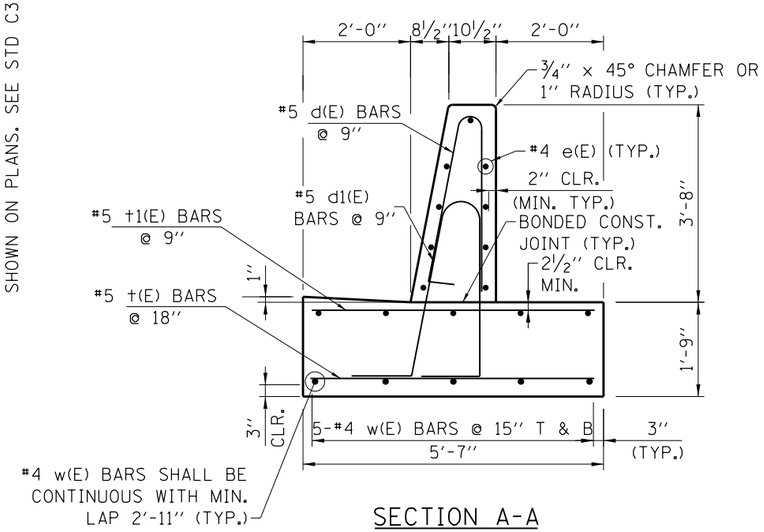

SECTION A-A

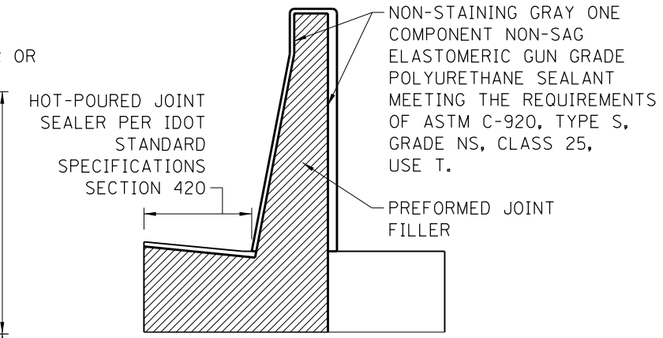

EXPANSION JOINT
SECTION C-C

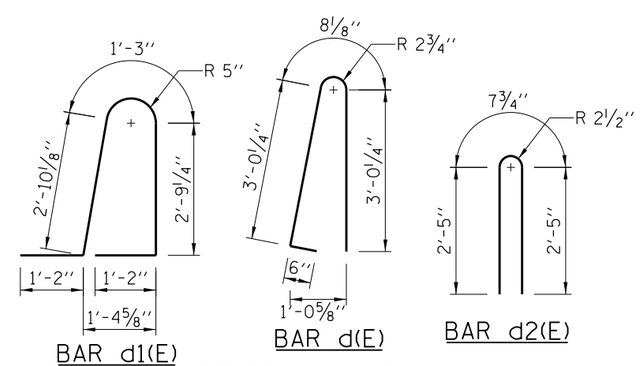

BENDING DIAGRAMS

NOTES:

1. THIS REINFORCED CONCRETE TL-4 BARRIER HEIGHT TRANSITION IS USED TO VARY THE BARRIER HEIGHT FROM 44" TO 54". THE MINIMUM LENGTH OF INSTALLATION BETWEEN EXPANSION JOINTS SHALL BE 35'-0". BASIS OF DESIGN: IL TOLLWAY STRUCTURE DESIGN MANUAL.
2. TOP SHOULDER EDGE OF BARRIER BASE GUTTER SHALL MATCH THE TOP OF SHOULDER ELEVATION.
3. 1" DEEP CONTRACTION JOINTS SHALL BE CONSTRUCTED IN BOTH THE REINFORCED CONCRETE BARRIER WALL AND BASE. CONTRACTION JOINTS SHALL ALSO BE CONSTRUCTED AT BOTH SIDES OF ALL DRAINAGE STRUCTURES. SEE STANDARD C3 FOR REINFORCEMENT AROUND DRAINAGE STRUCTURES. MAXIMUM CONTRACTION JOINT SPACING SHALL BE 30'-0".
4. CONTRACTION JOINTS SHALL BE FORMED BY A GROOVE 1/8", EITHER IN THE PLASTIC CONCRETE OR SAWED AFTER THE CONCRETE HAS SET.
5. REINFORCEMENT BARS DESIGNATED "(E)" SHALL BE EPOXY COATED. ALL w(E) AND e(E) BARS SHALL BE CONTINUOS WITH 2'-11" LAPS MIN. "E.F." DENOTES EACH FACE.
6. REINFORCEMENT BARS BENDING DETAILS SHALL BE IN ACCORDANCE WITH THE "MANUAL OF STANDARD PRACTICES FOR DETAILING REINFORCED CONCRETE STRUCTURES", ACI 315, LATEST EDITION. REINFORCEMENT BARS BENDING DIMENSIONS ARE OUT TO OUT.

DATE	REVISIONS
3-01-2022	REVISED NOTES
3-01-2021	REVISED REBAR LENGTH

Illinois Tollway

CONCRETE SHOULDER BARRIER HEIGHT TRANSITION, SINGLE FACE, TYPE SF-54

STANDARD C18-02

Paul Kovacs
APPROVED ..... DATE 8-28-2020
CHIEF ENGINEERING OFFICER